Bipod Sub-Assembly

Overview

Assemble the locking bipod mechanism before inserting it into the bipod shroud body.

Steps

Step 1: Install Right Leg

Insert `RightLeg` into the right side of `BipodCore` and secure with 1x 6-32 socket head screw. The indent should face inward.

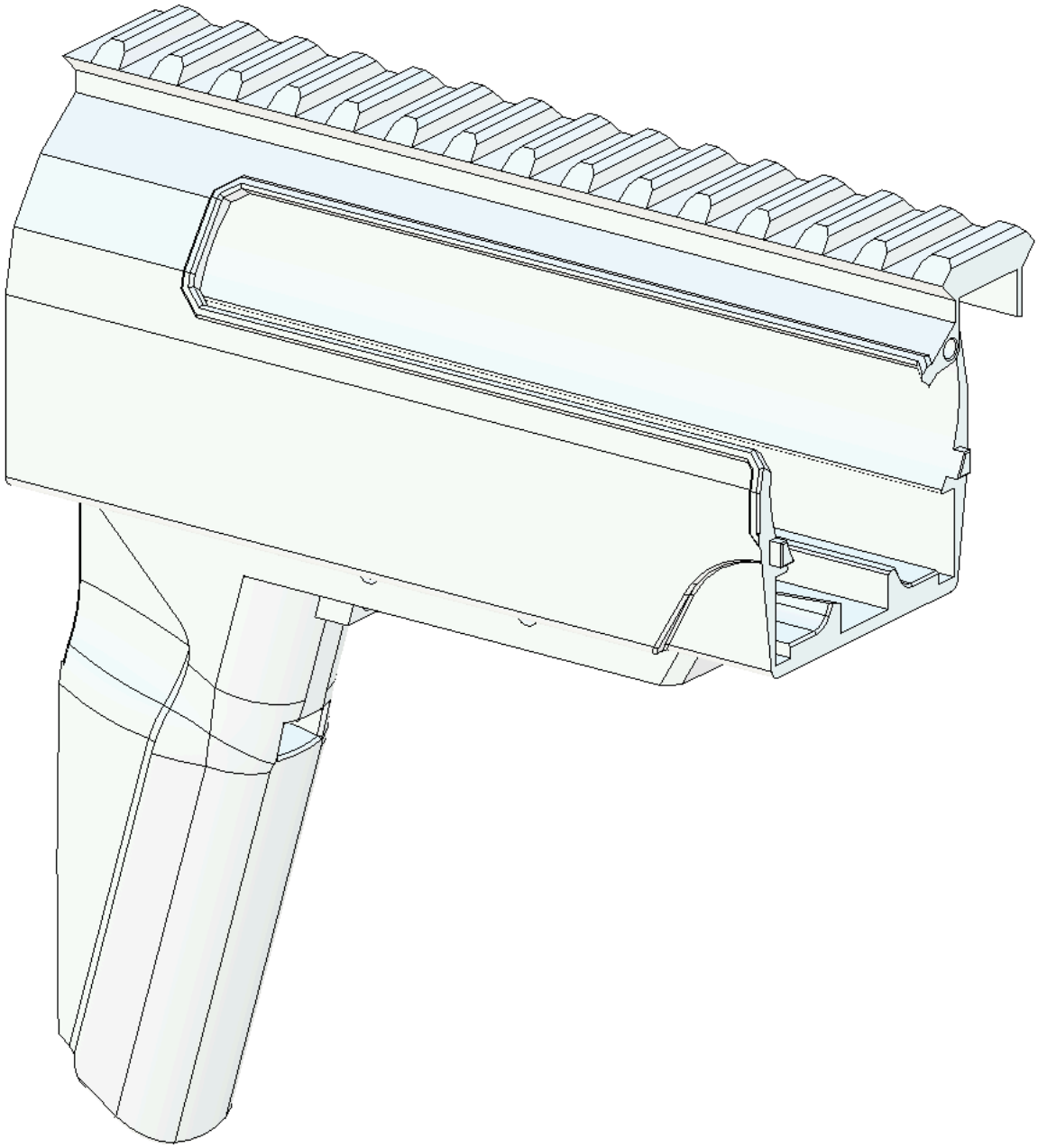

Step 2: Install Left Leg

Insert `LeftLeg` into the left side of `BipodCore` and secure with 1x 6-32 socket head screw. Confirm both leg indents face inward.

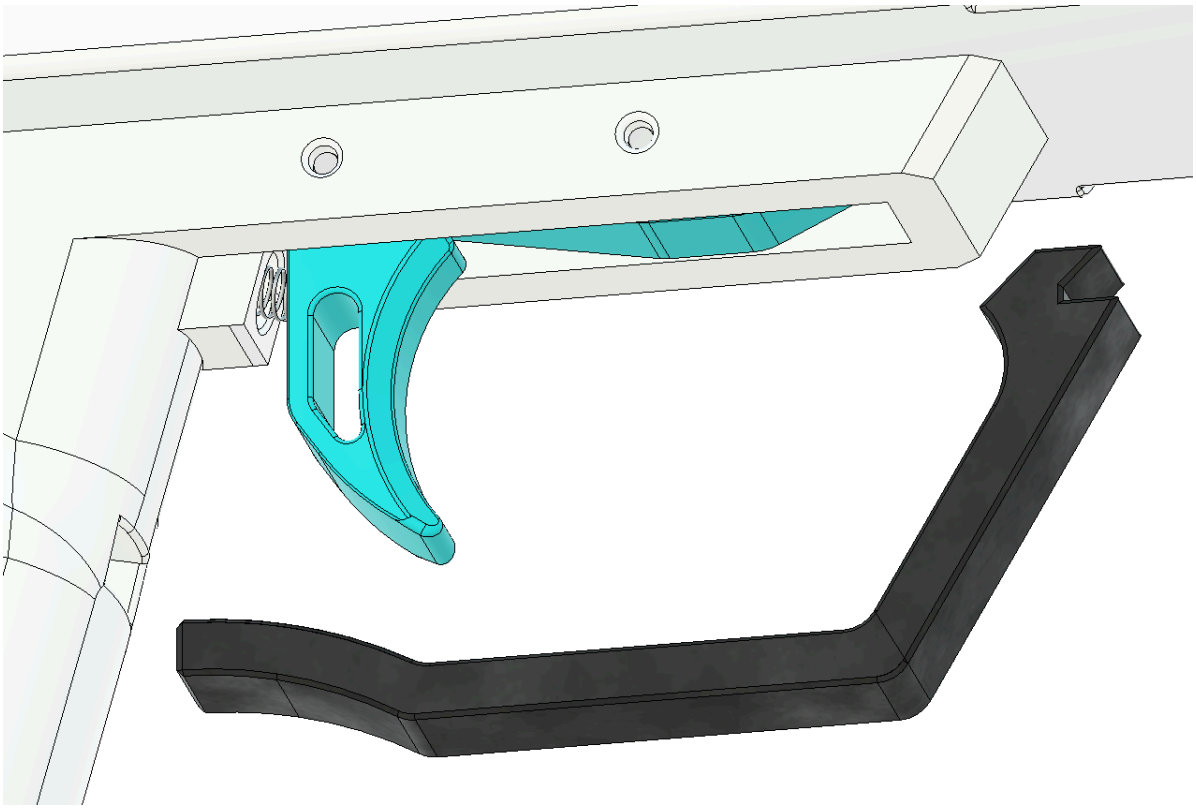

Step 3: Prepare Lock Nubs and Spring

Optionally smooth the front angled sections of `RightLockNub` and `LeftLockNub`. Place both lock nubs in `BipodCap` with nub faces inward, then insert the spring between them.

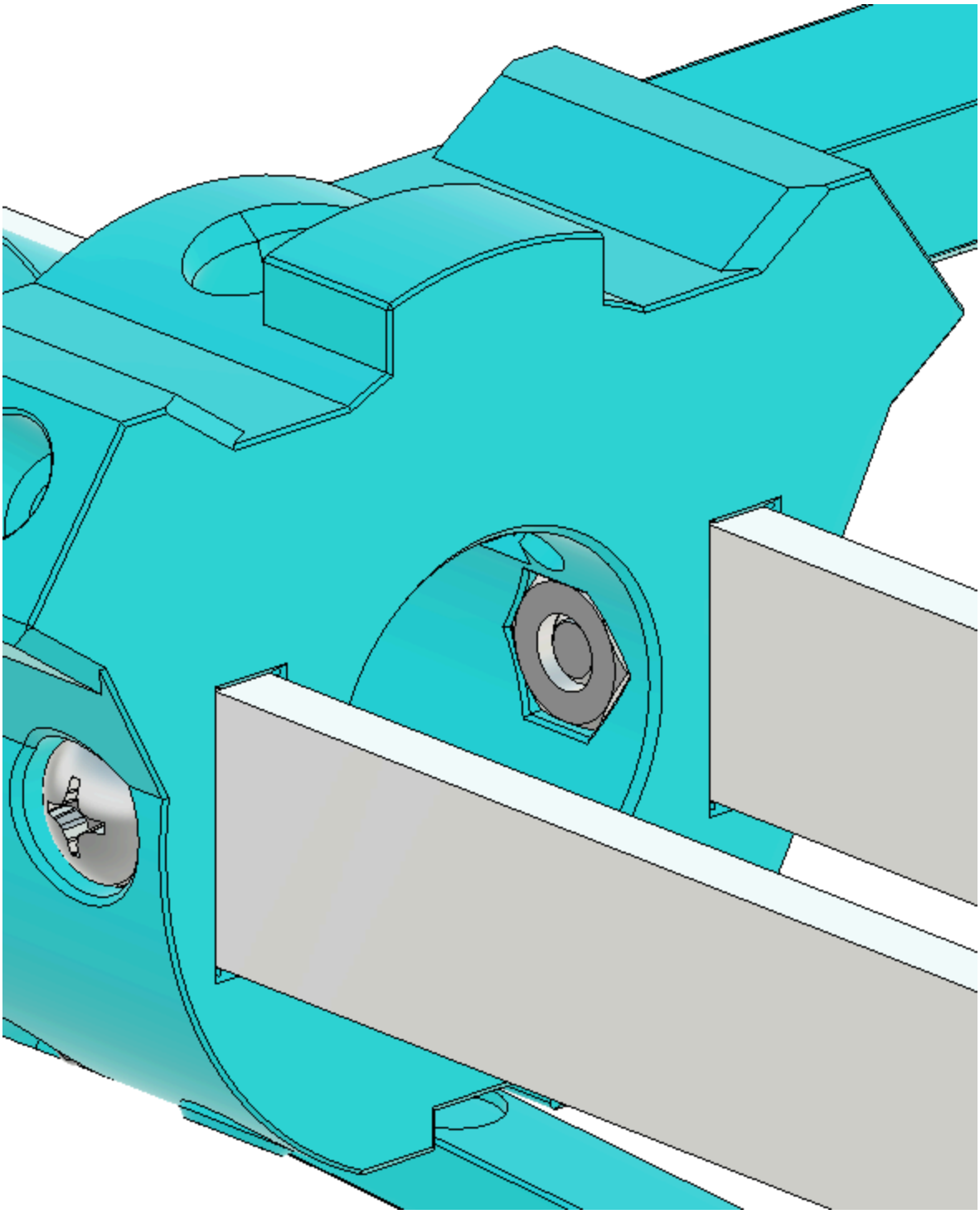

Step 4: Install Cap

Install the cap assembly onto the bottom of `BipodCore` and secure with 1x 6-32 Phillips screw. Confirm lock nubs move freely and spring back.

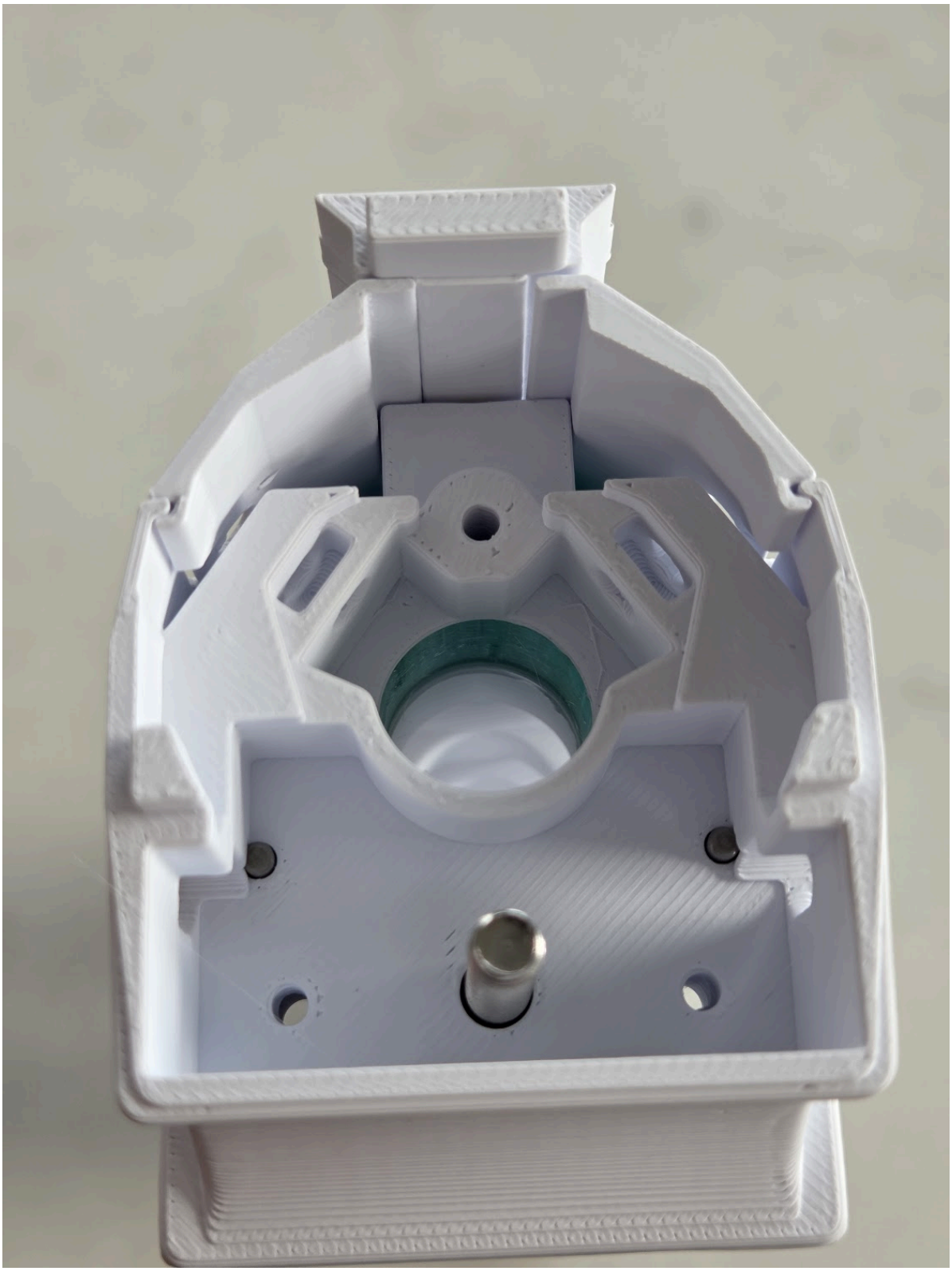

Step 5: Prepare Button Dowels

Optionally smooth the inner center edges of `BipodButton`. Insert 2x 3/32 inch dowels into the left and right holes of the button.

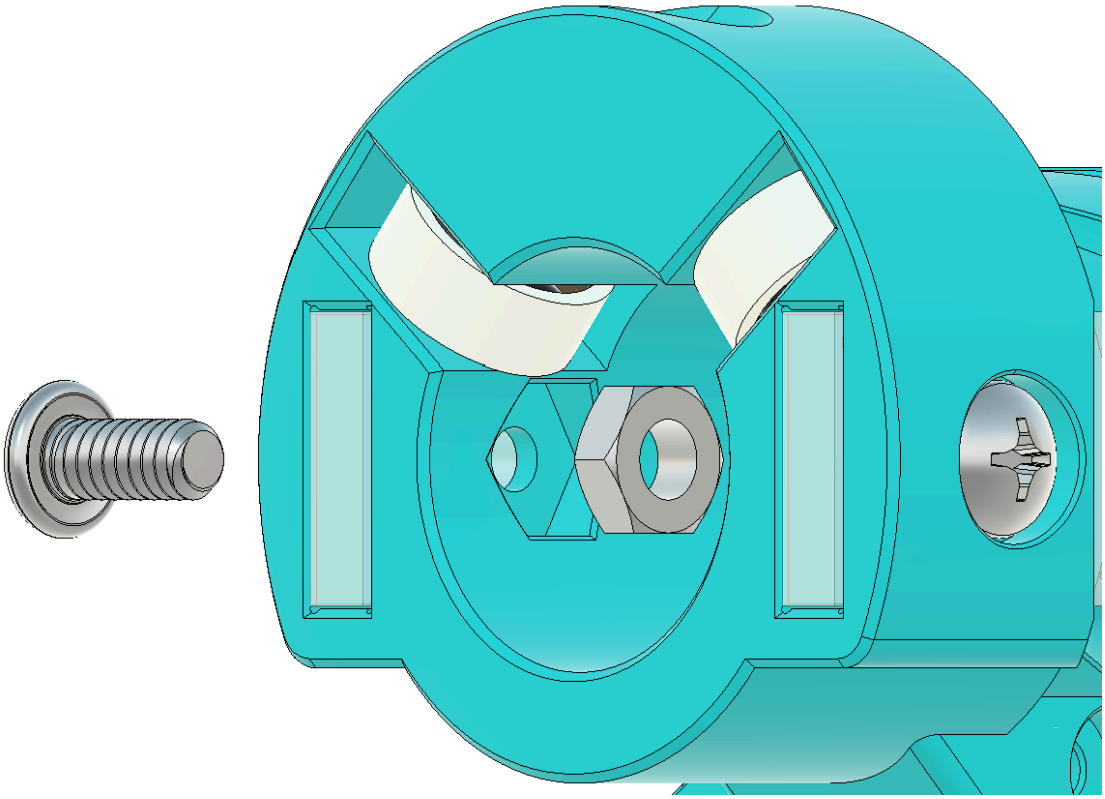

Step 6: Install Button
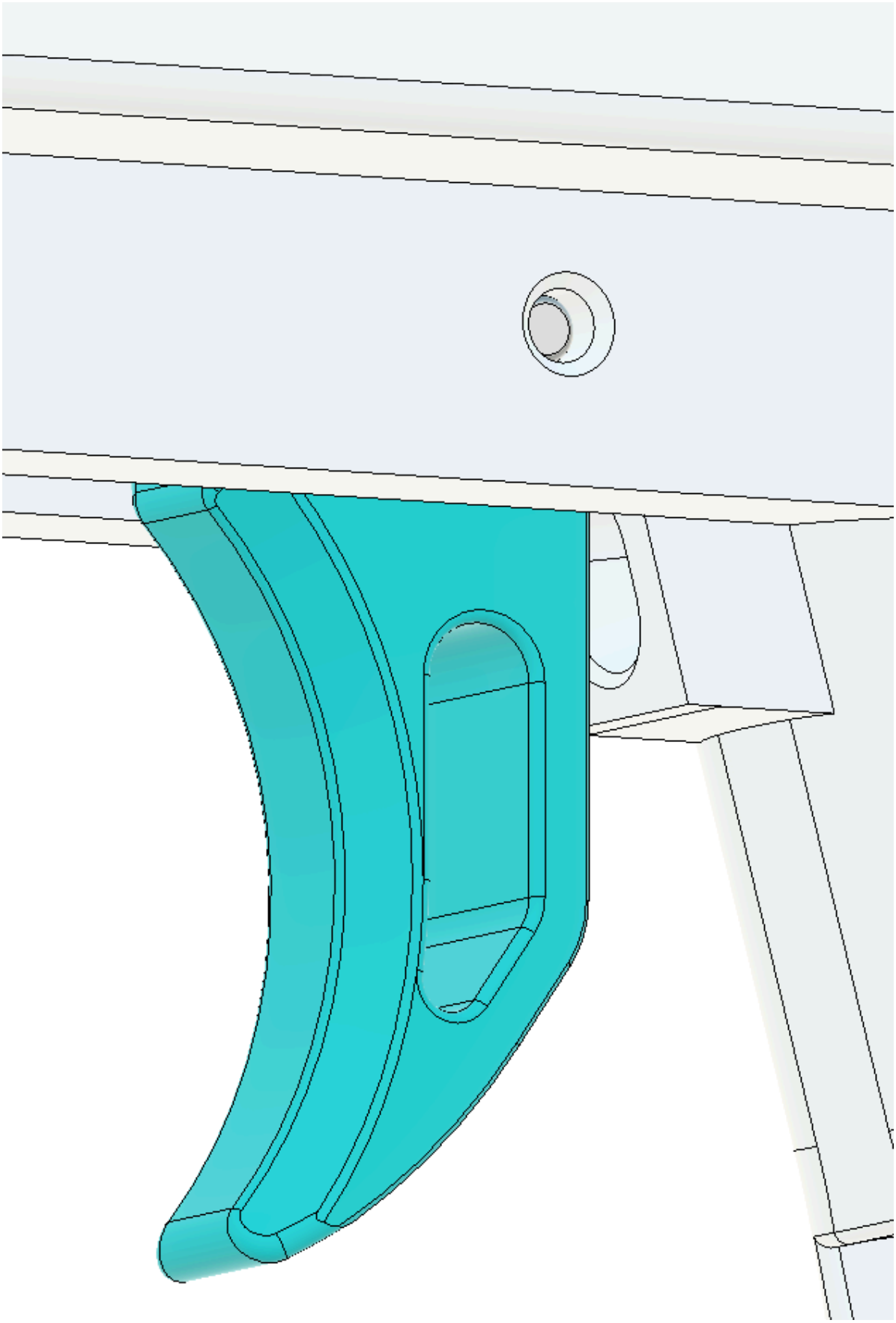
Insert the button into the front of the core, align top guides, and confirm pressing the button retracts both lock nubs.