Shroud Assembly

View Materials List

Overview

Assemble one of the front shroud variants for your BABP build. This section covers both the standard railgun shroud and the railgun bipod shroud path.

Variant Paths

- Railgun Variant
- Bipod Sub-Assembly
- Bipod Variant

Steps

Step 1: Choose a Variant

Select either the railgun variant or the railgun bipod variant before starting hardware installation.

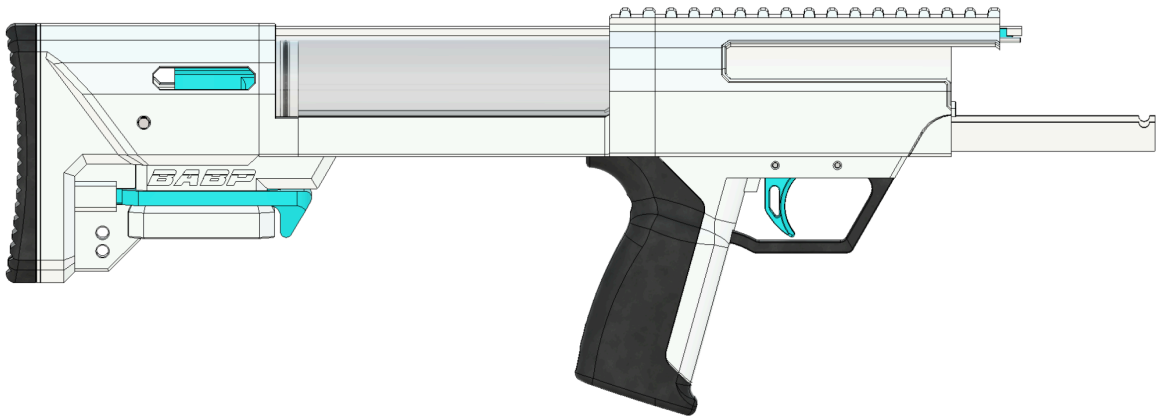

Step 2: Complete the Matching Variant Page
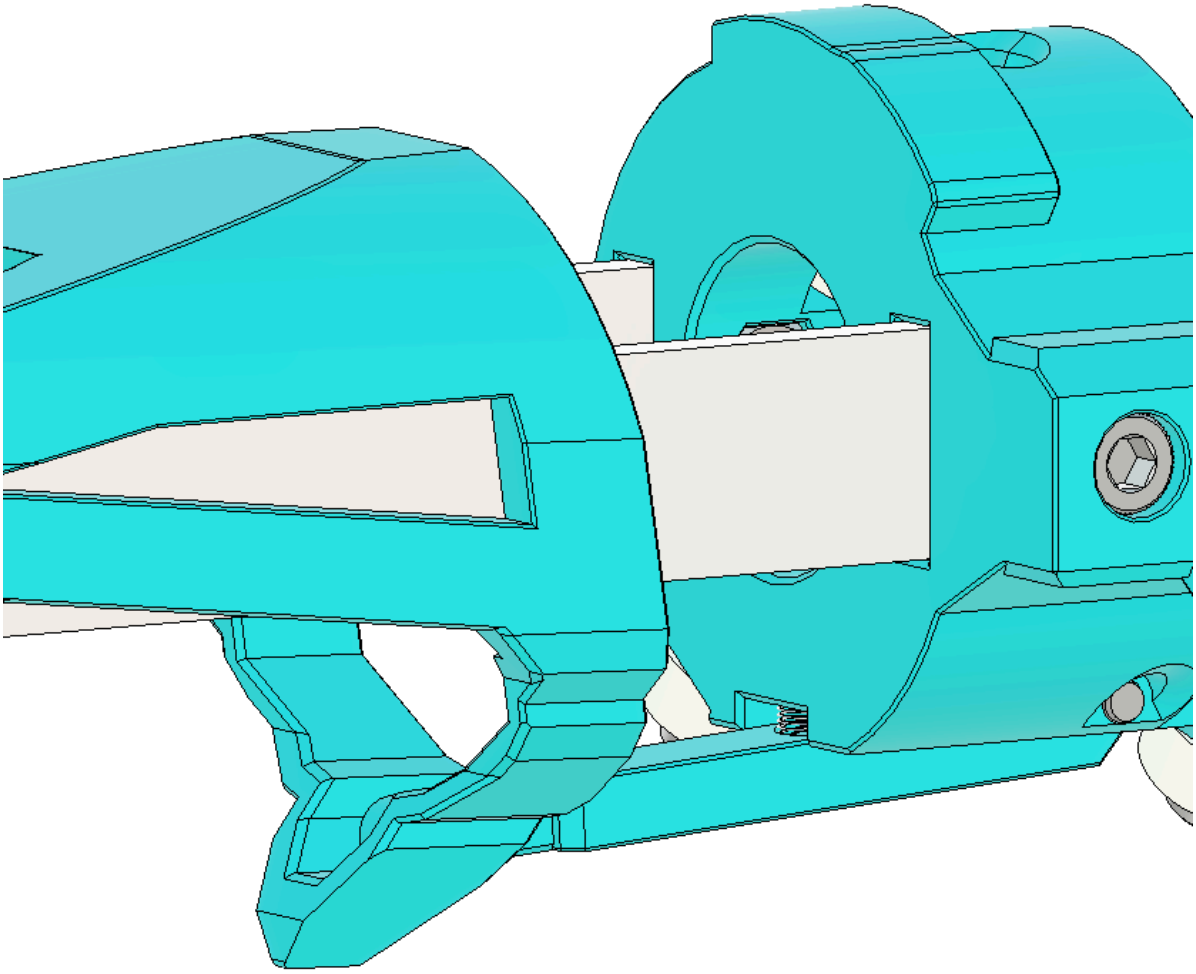
Follow the linked variant page in full before continuing to Receiver Assembly.