Plunger Sub Assembly

Steps

Step 1

The Plunger Sub-Assembly is the half of the core that stores energy and is released upon firing, pushing air down the plunger tube to propel the dart. It slides inside the plunger tube and along the barrel, and is the assembly with the most impact on the performance and efficiency of the blaster.

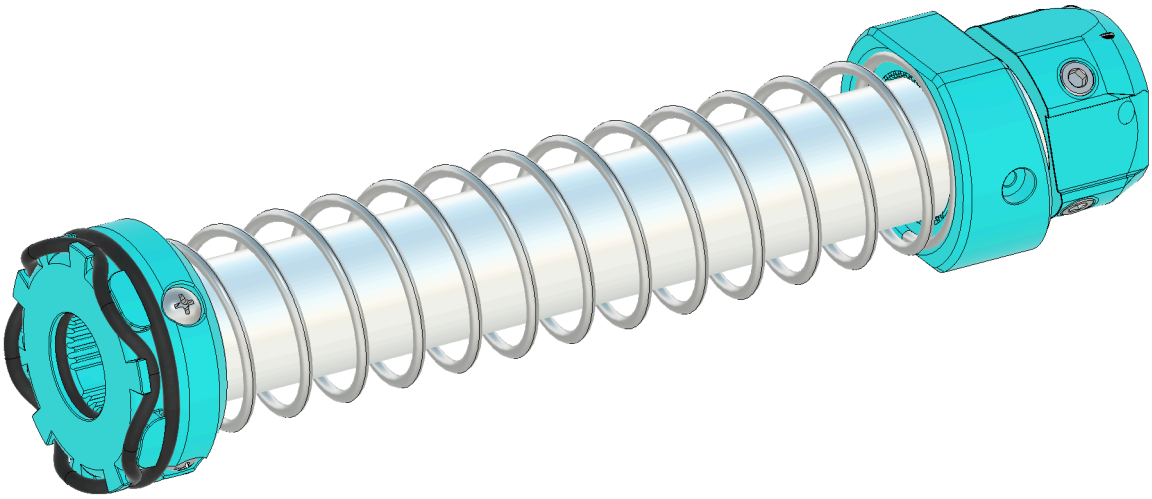

Step 2
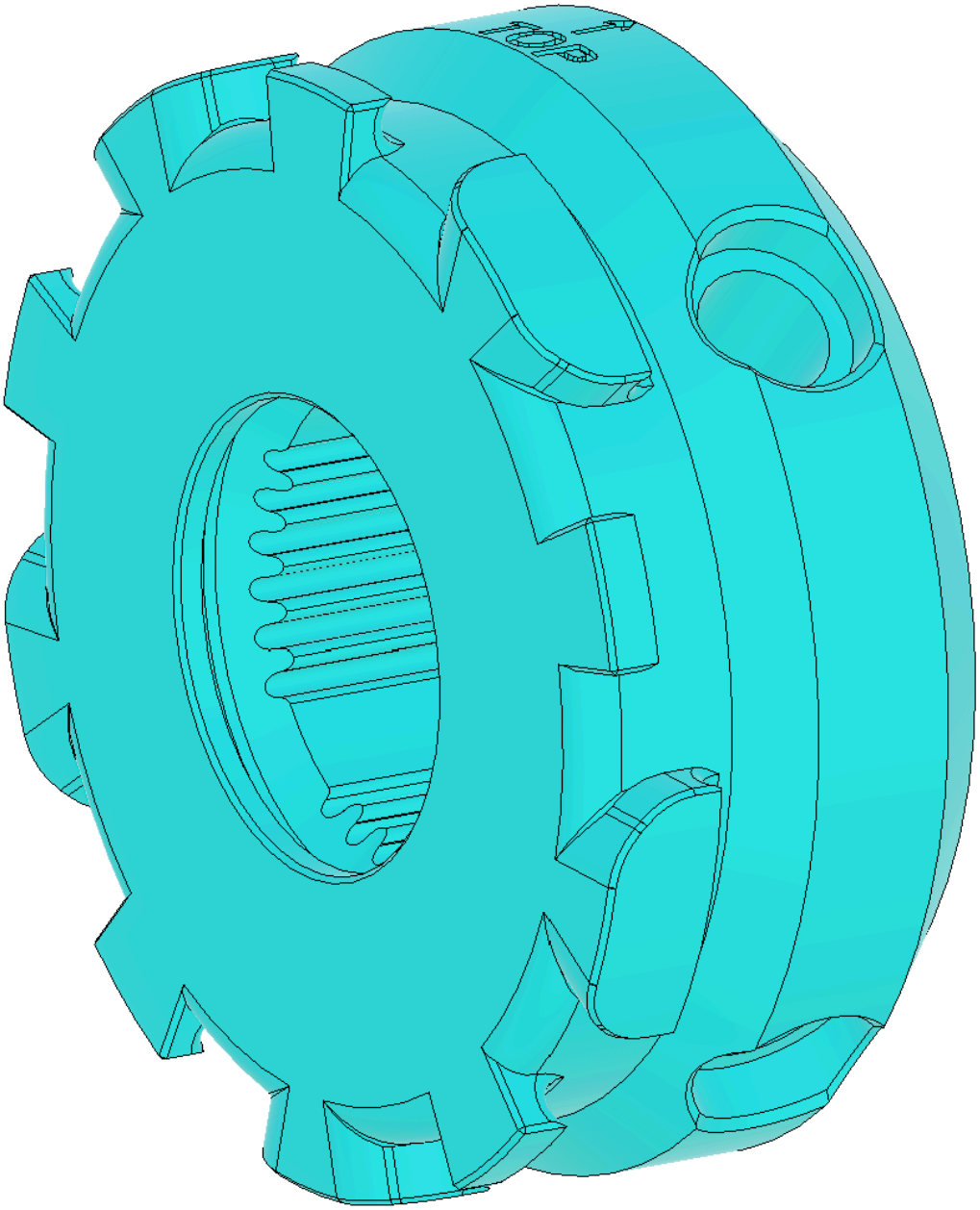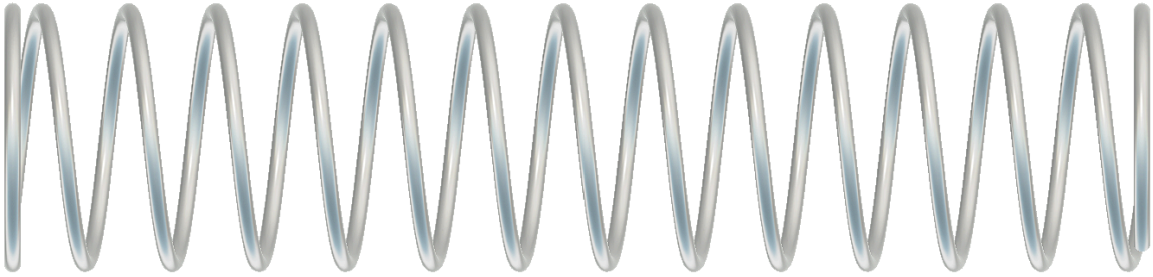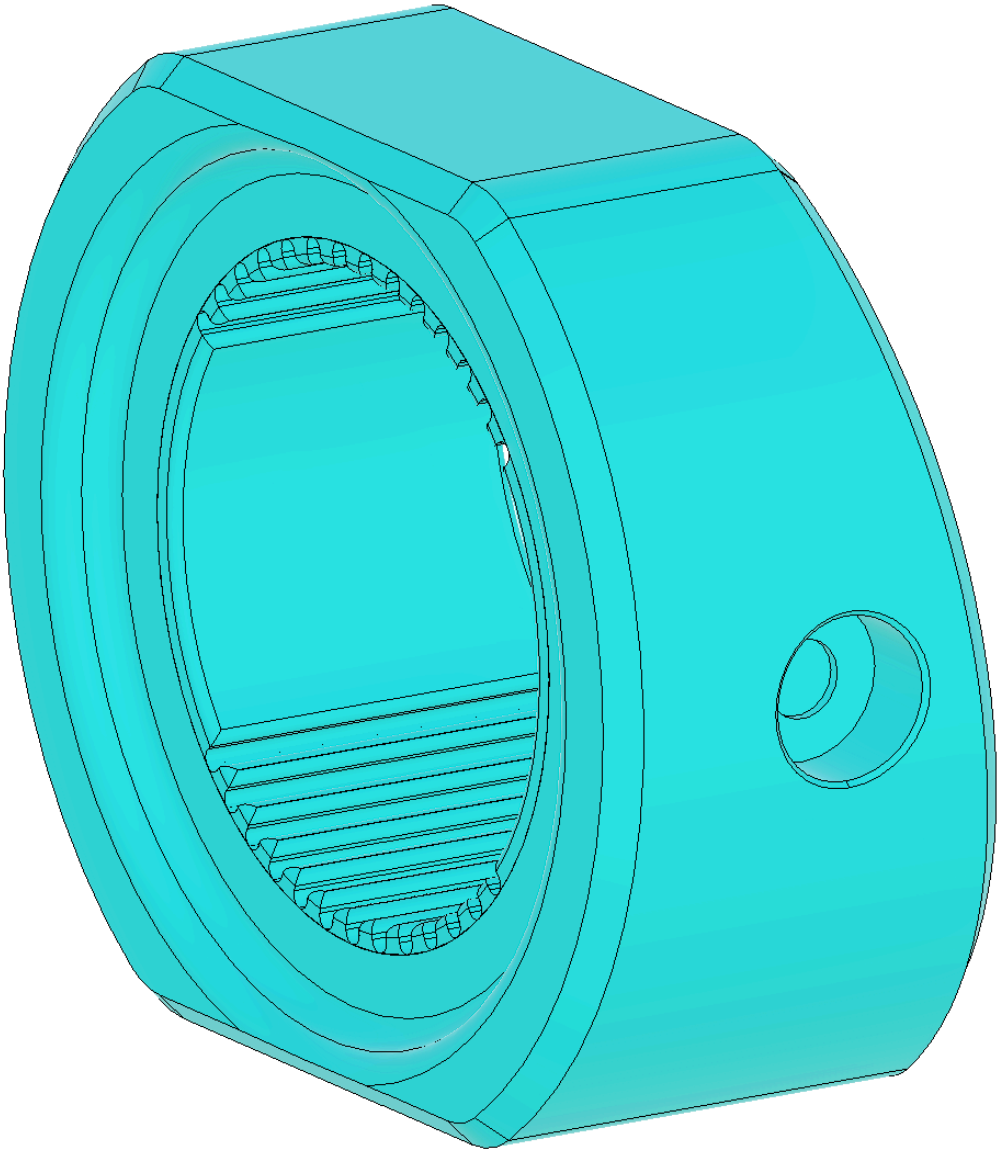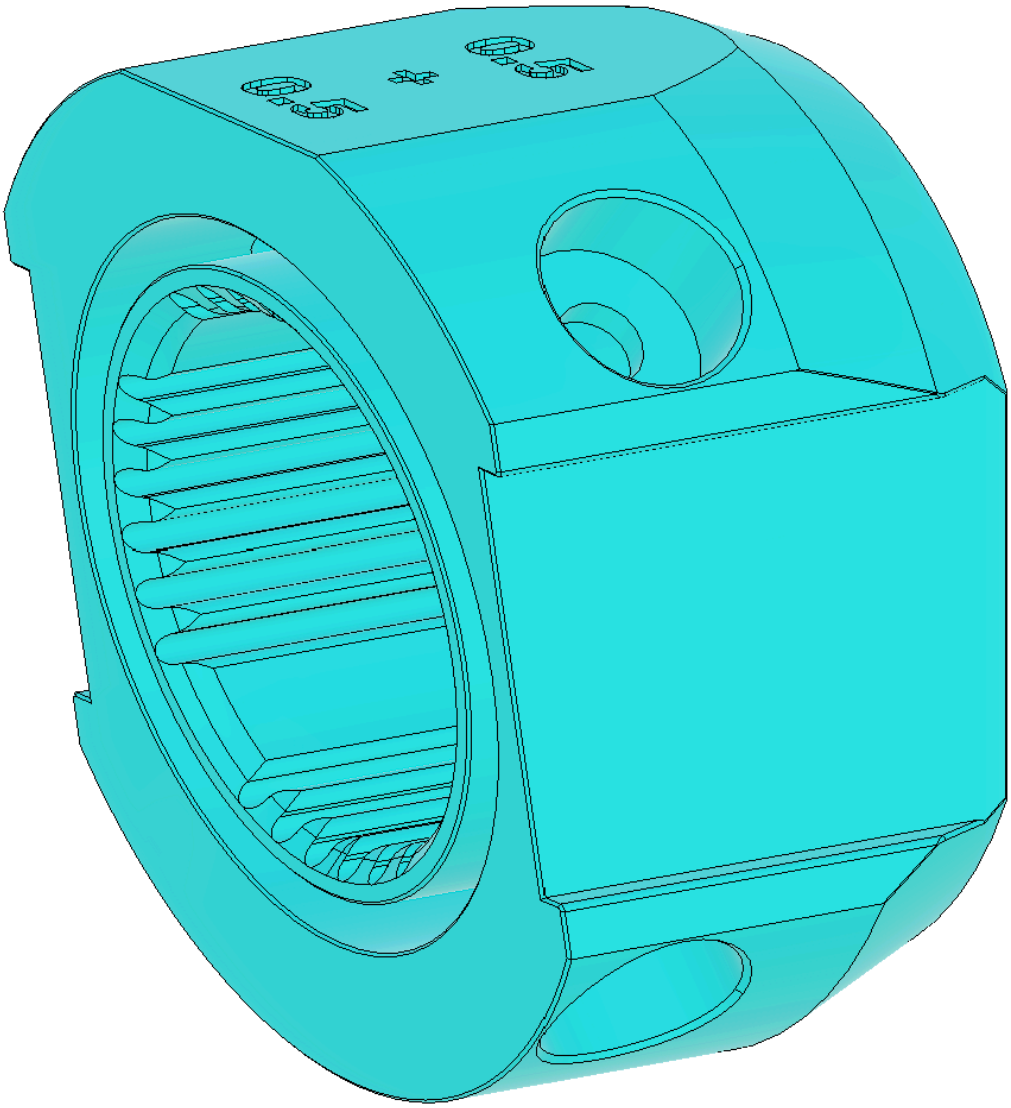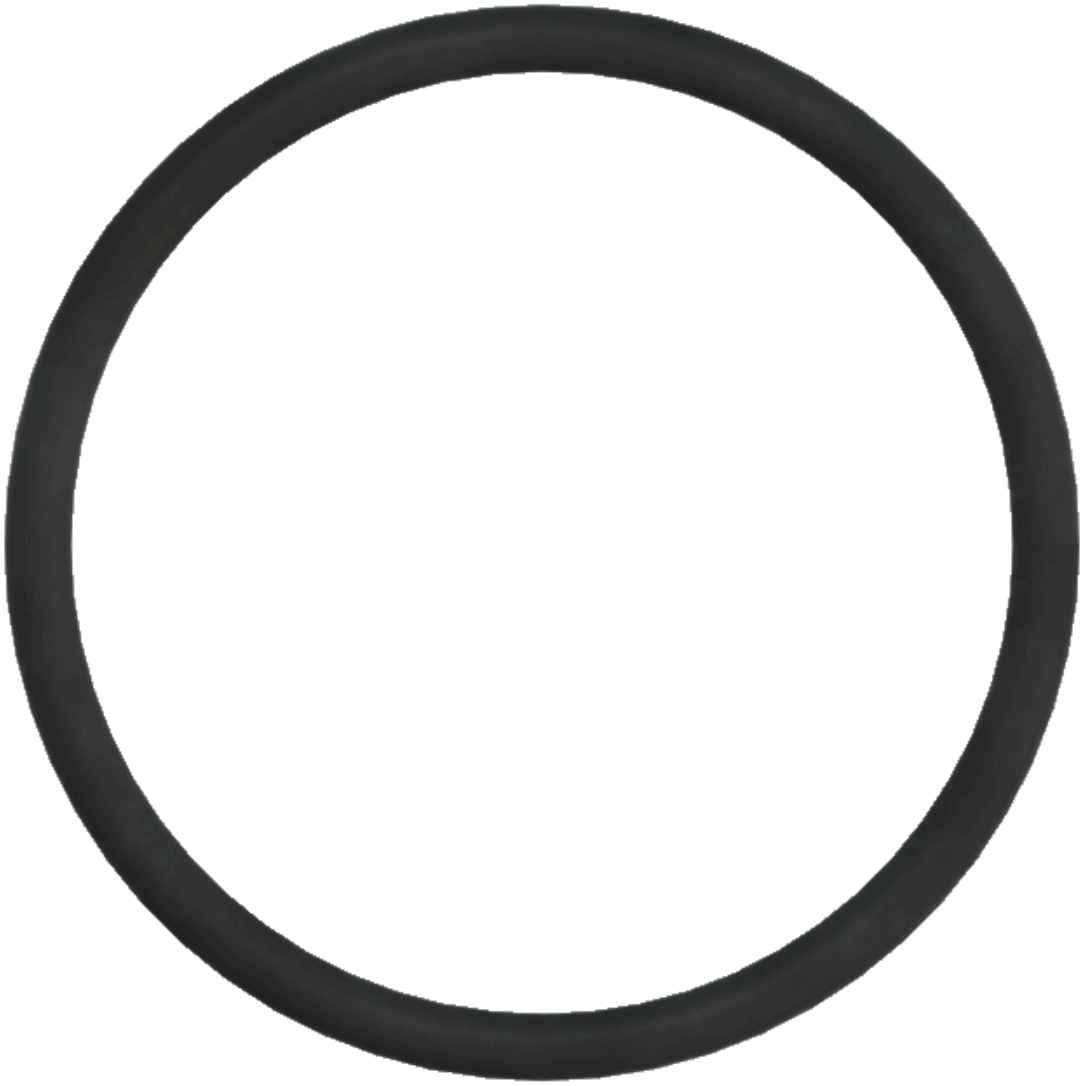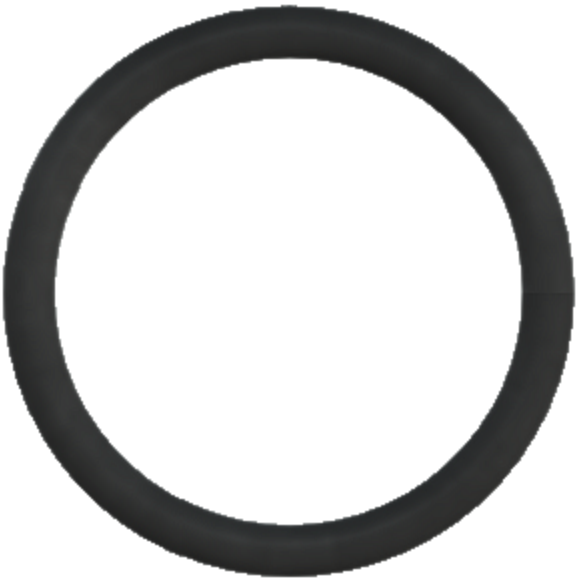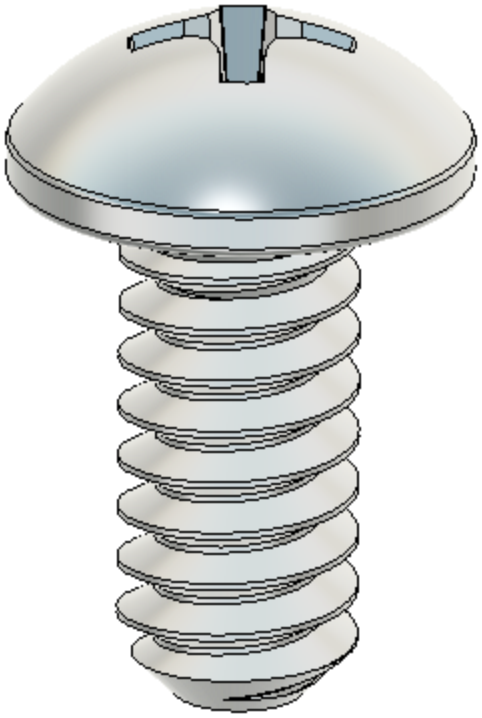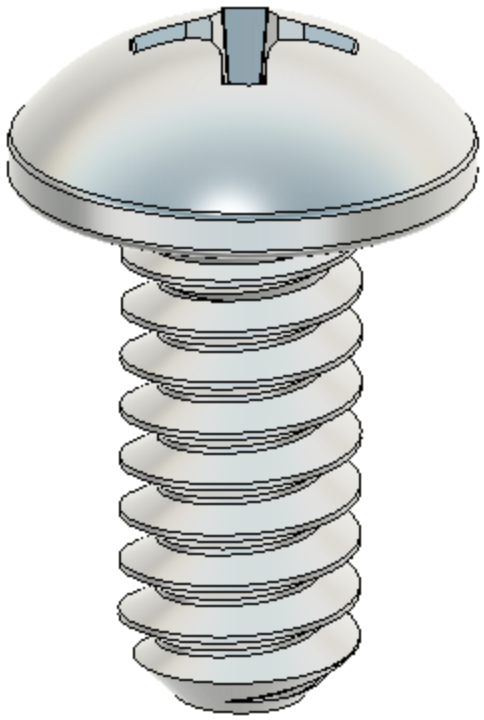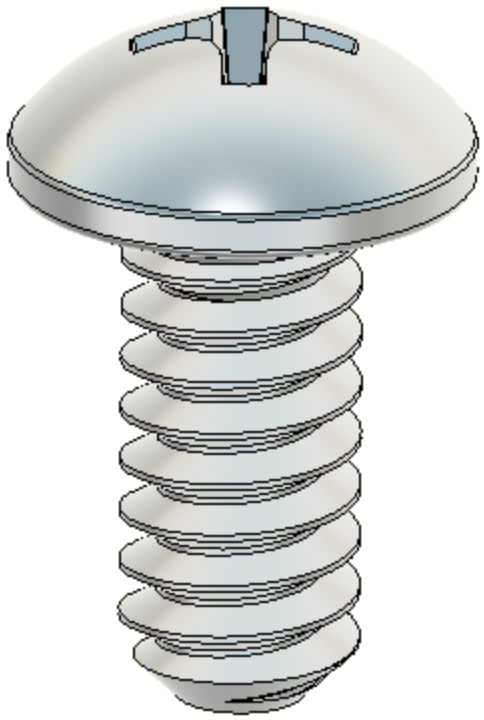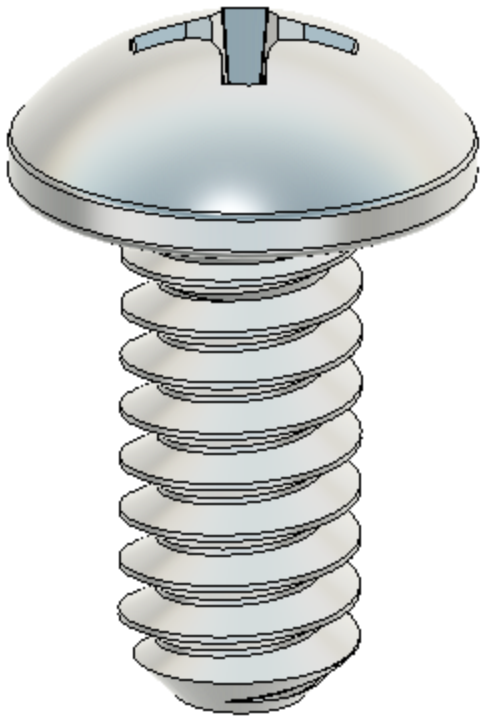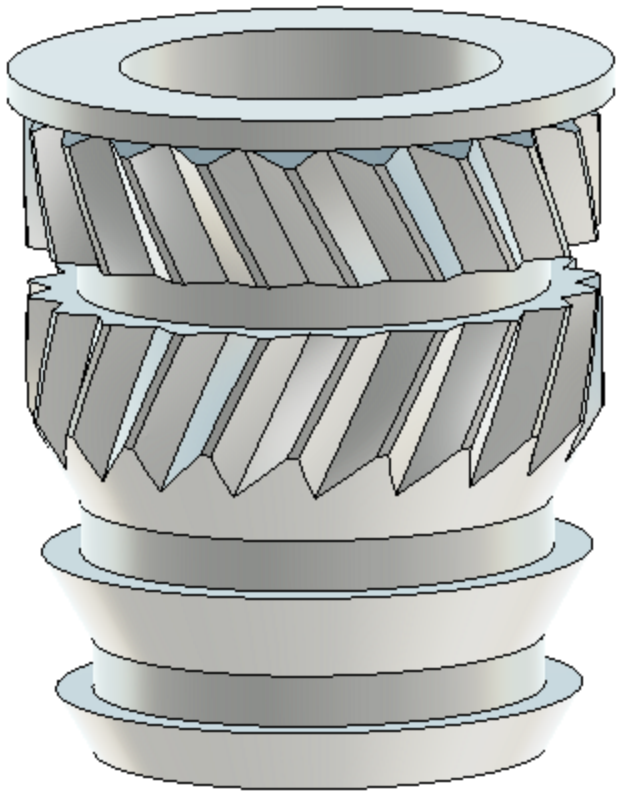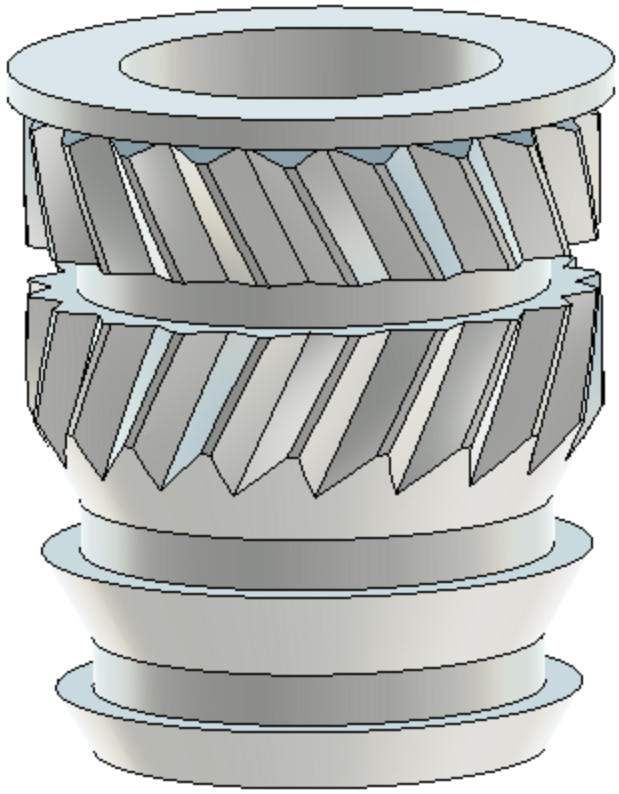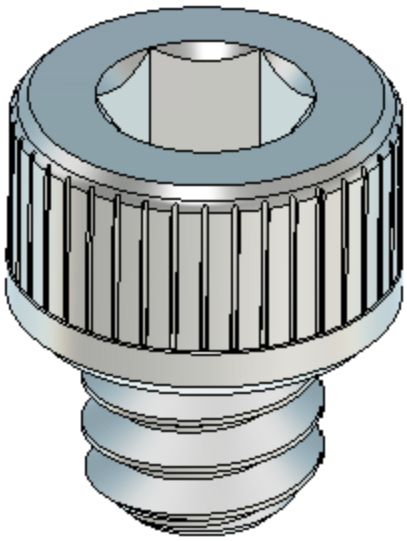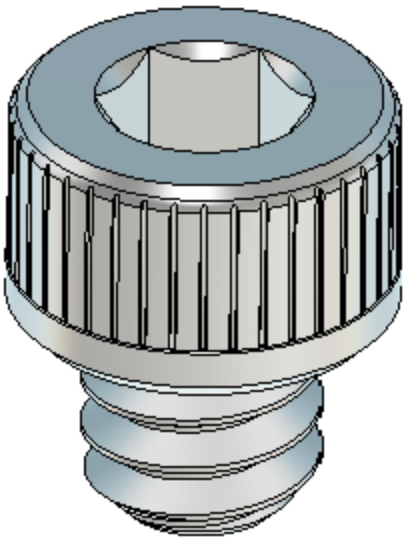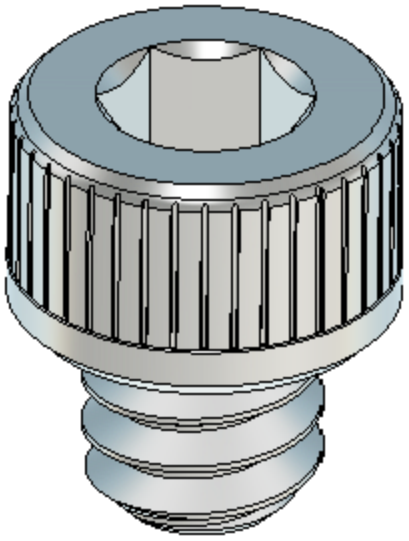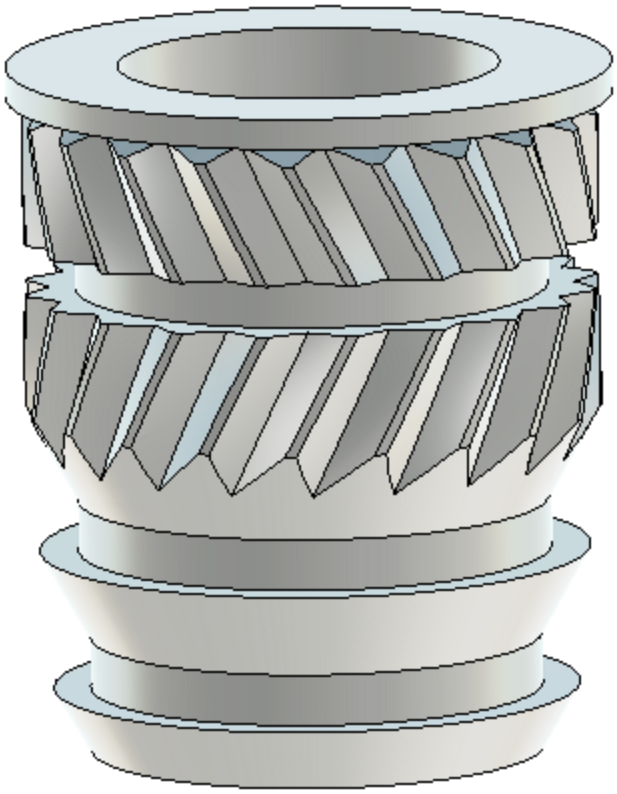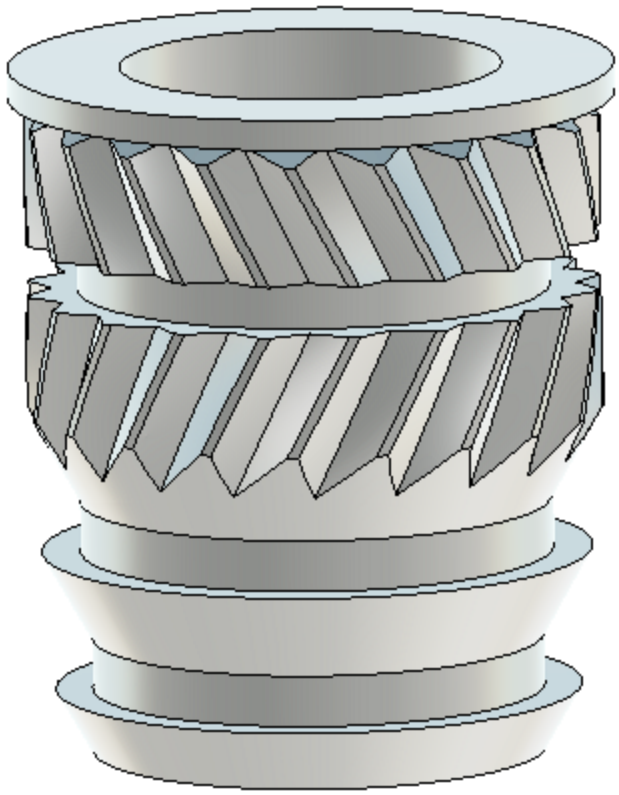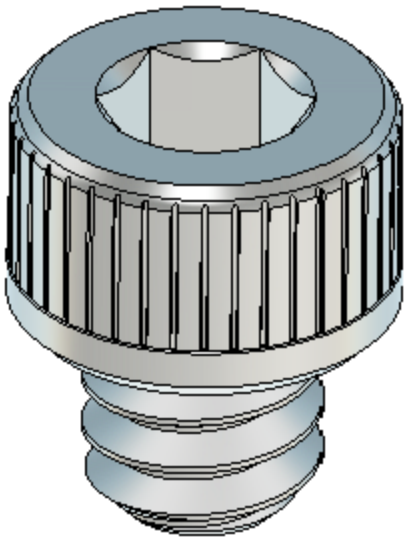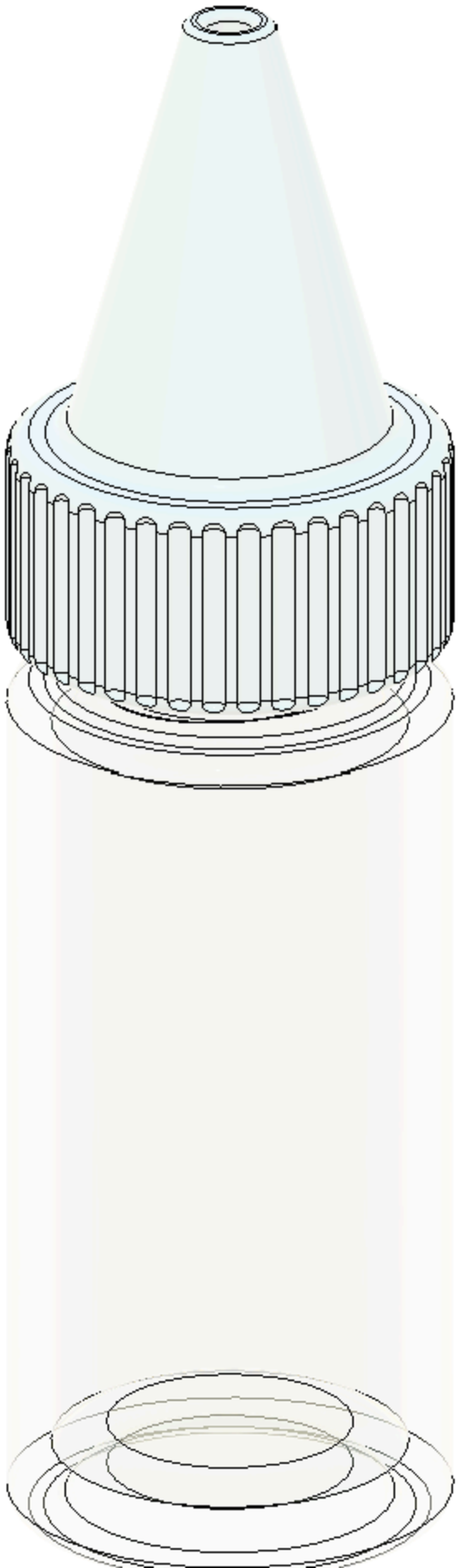
Take the PlungerHead, CatchEnd, and SpringBase (first photo, second photo, third photo respectively) and clean out their respective center through holes (closeup of PlungerHead center section in fourth photo). These inner sections will slide on the Barrel/CatchTube, and so minimizing friction is key for performance and consistency. Remove any stray plastic, and sand out any inconsistencies if needed. If desired, you can lightly sand the inside with some fine sandpaper, though be sure not to fully sand out the ridges as these are key to minimizing friction and clearing out debris.