Common Assembly

Steps

Step 1

On the front side of the PrimeBlock, attach (2) 623 POM Bearings using (2) 8mm M3 Socket Head Screws inserted through the top. Be careful to make sure the screw goes through the center of the bearing and does not crush the bearing due to misalignment. Best practice is to insert a bearing, hold it in place with your finger, make sure the center holes align, then hand tighten the screw while being careful the bearing does not move out of position. Do not overtighten and strip the cut plastic threads, but just enough so the screw is fully inserted and the bearing is secure.

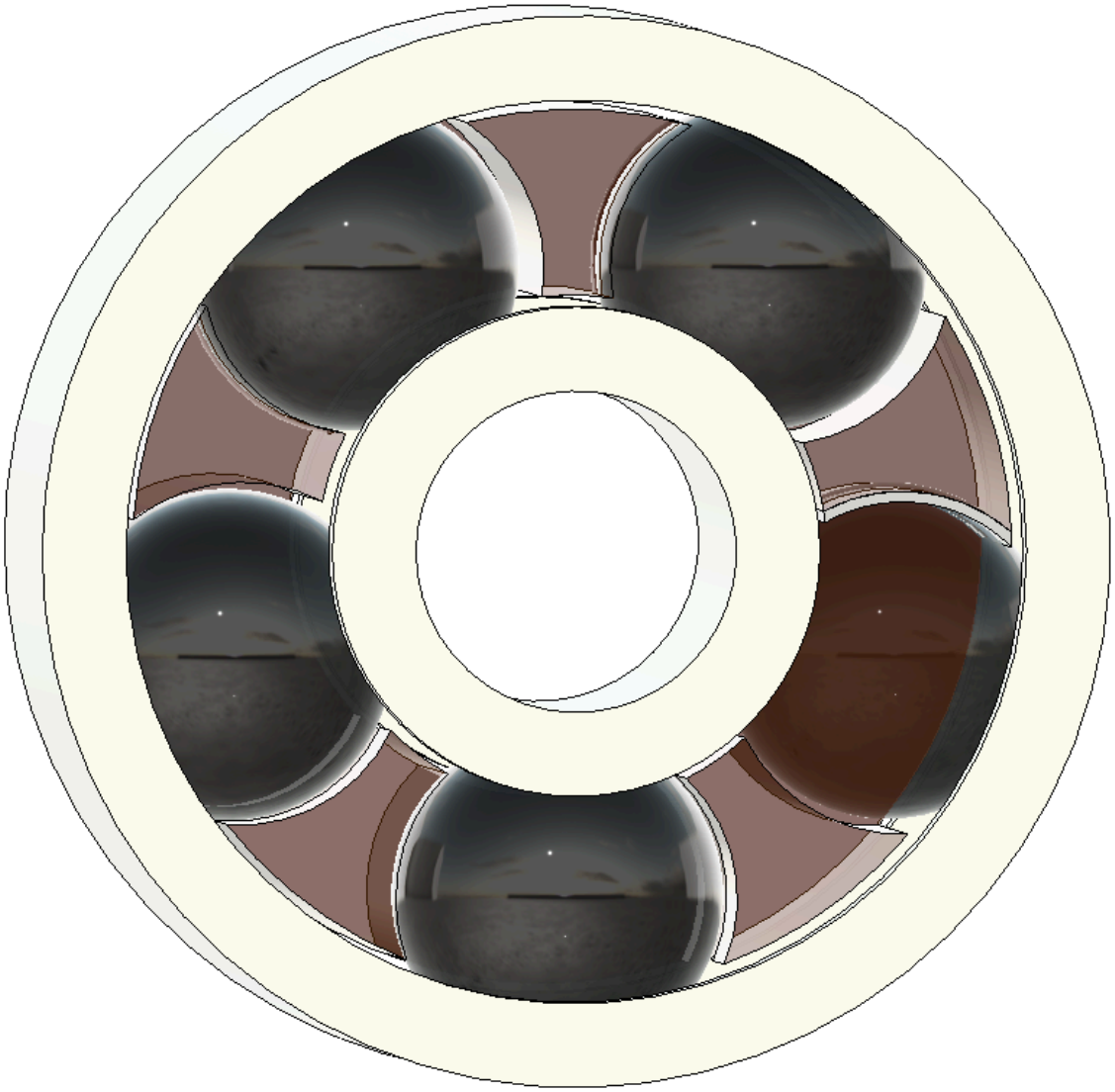

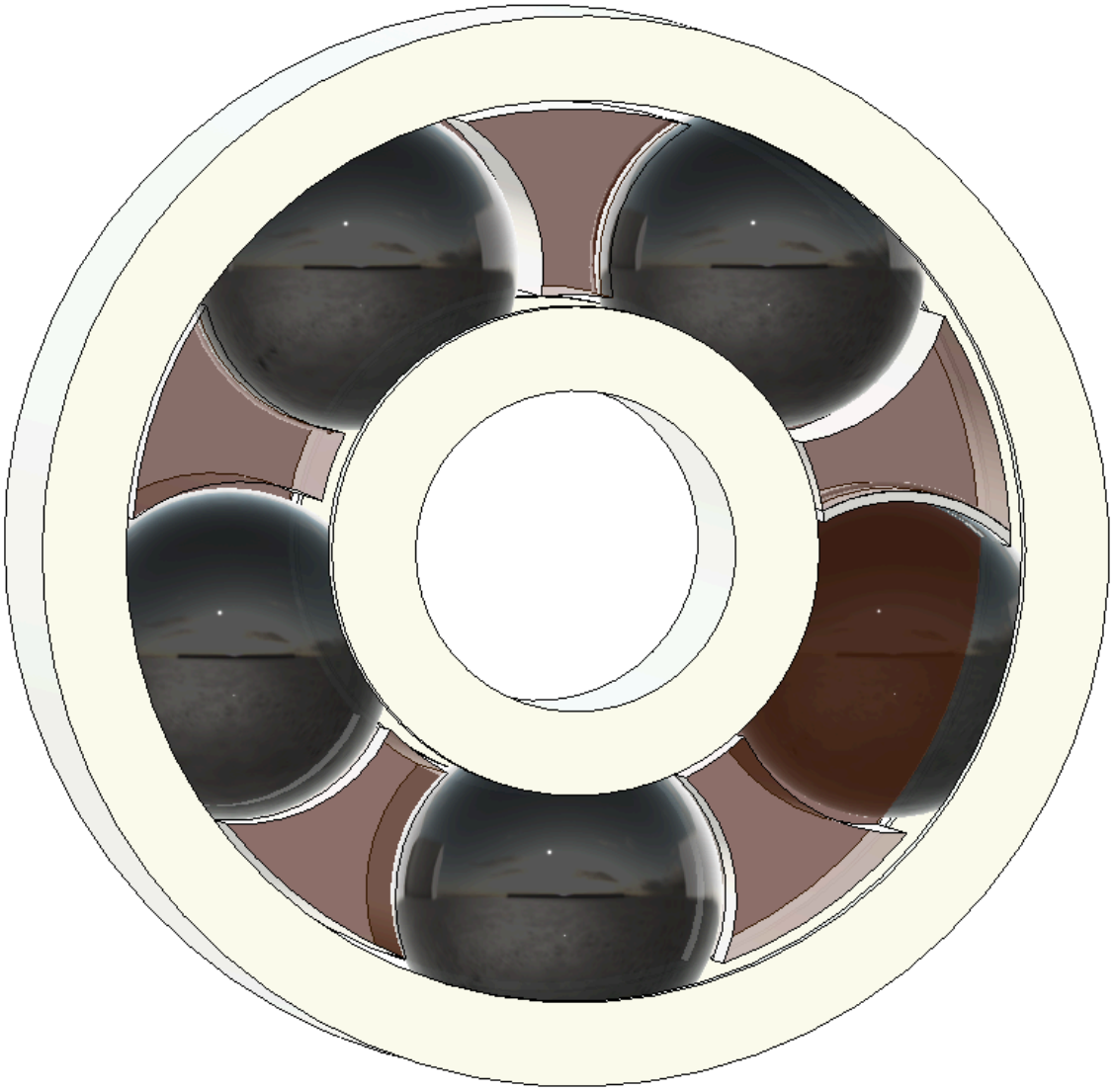

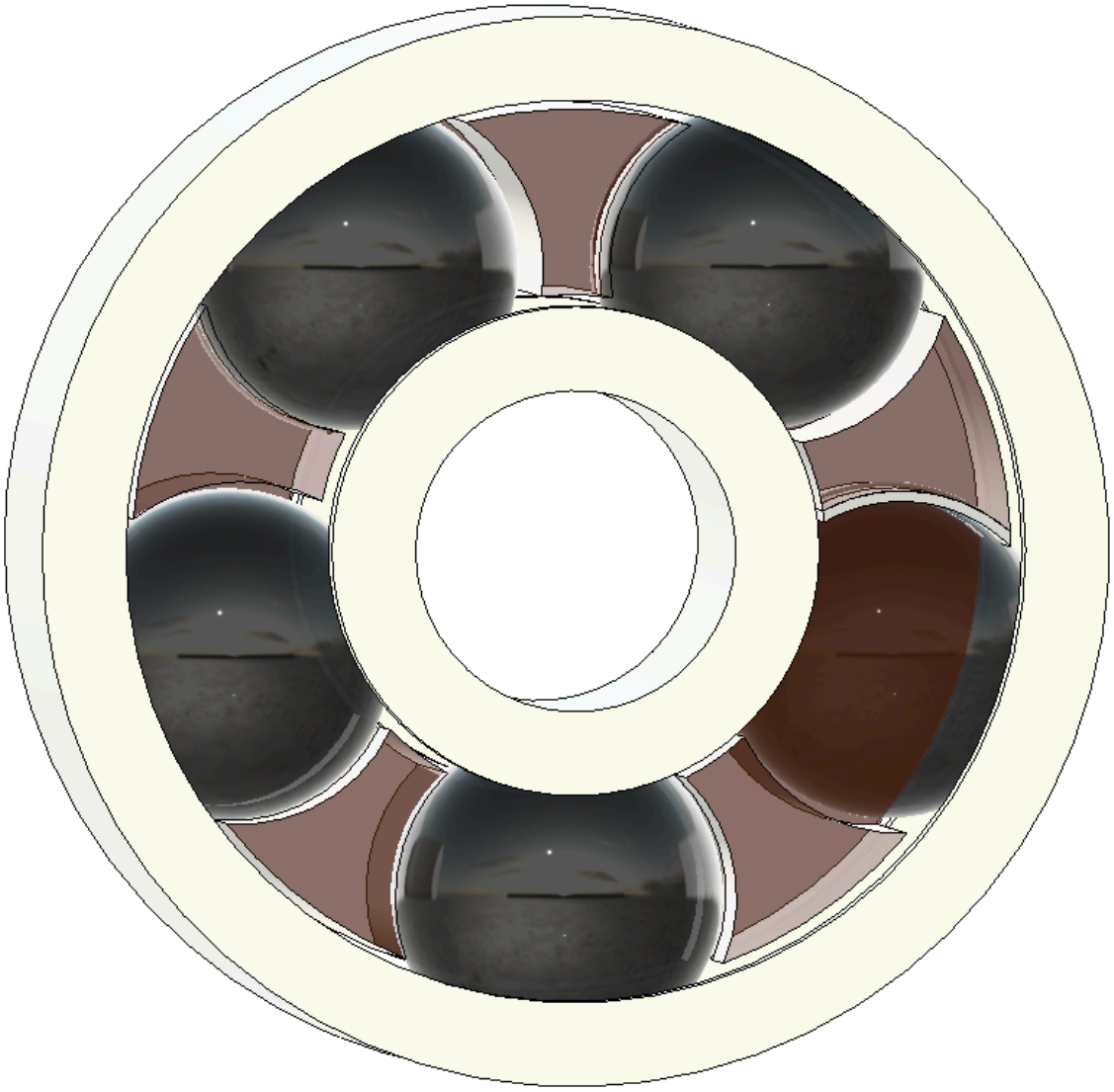

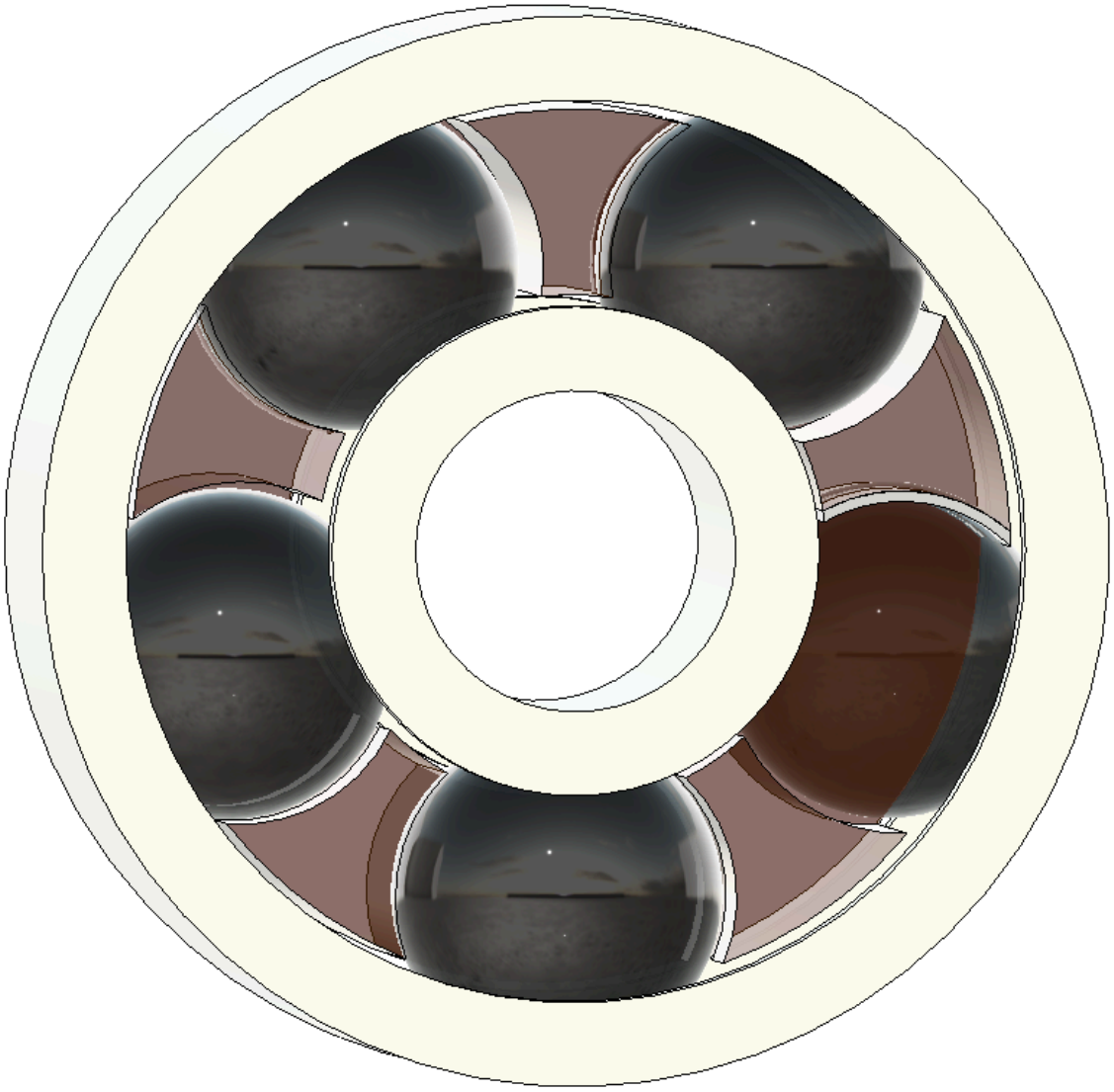

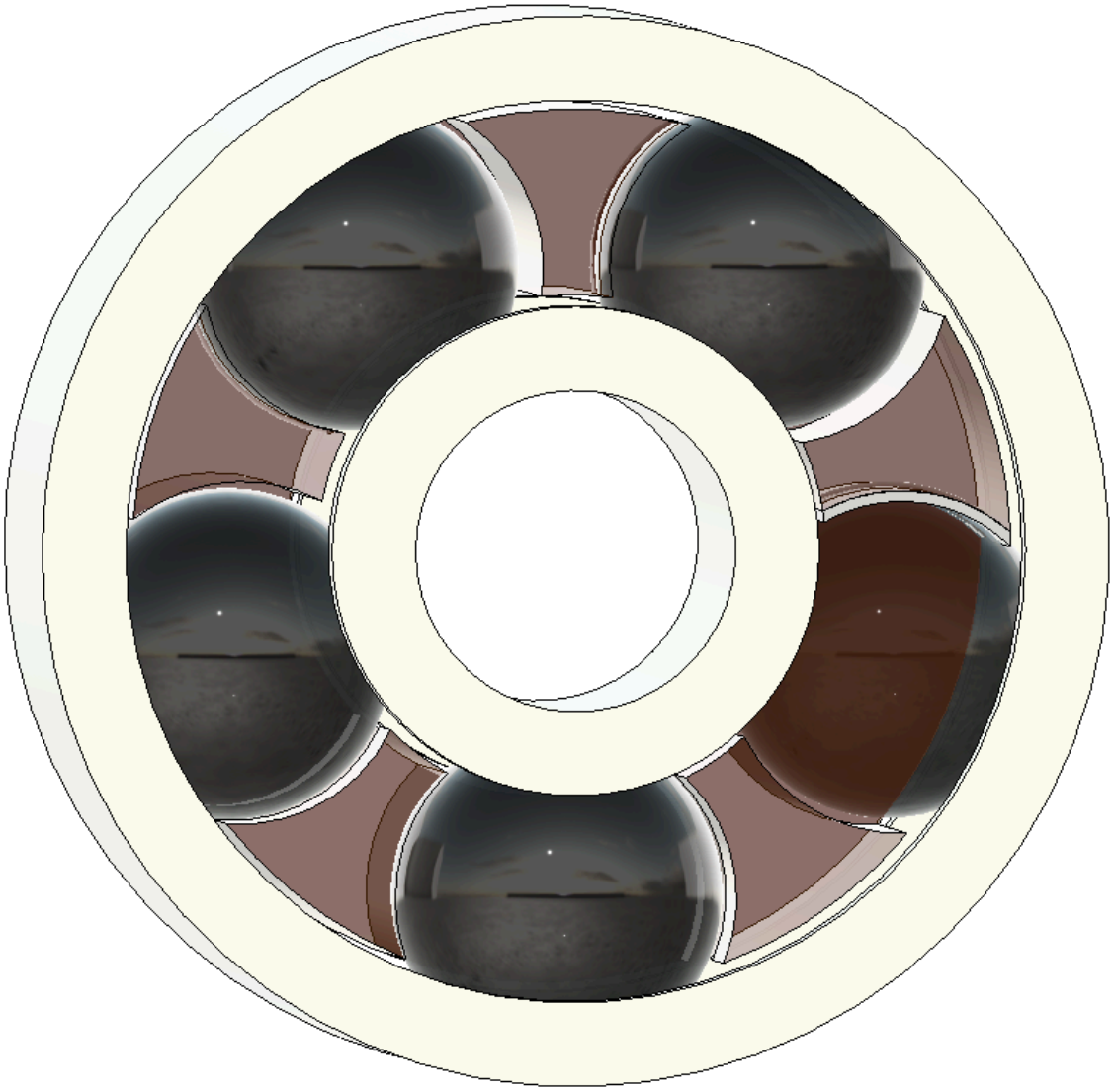

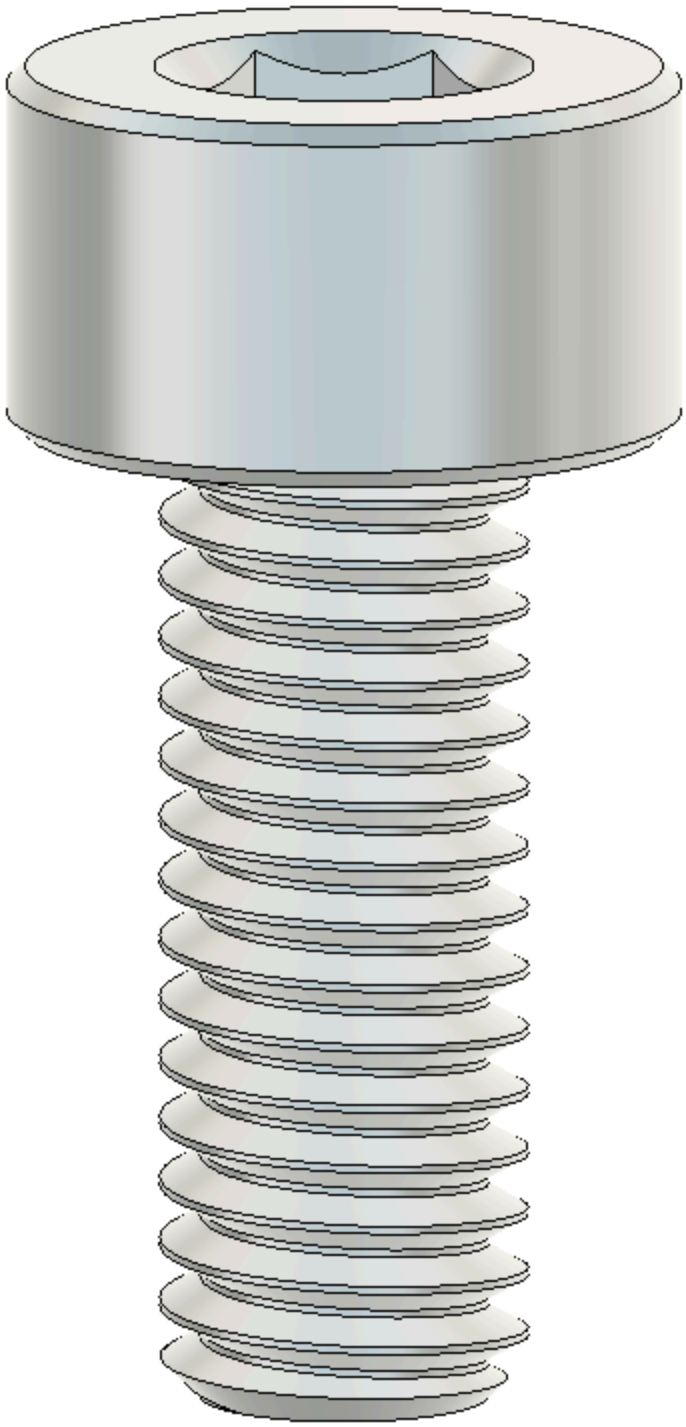

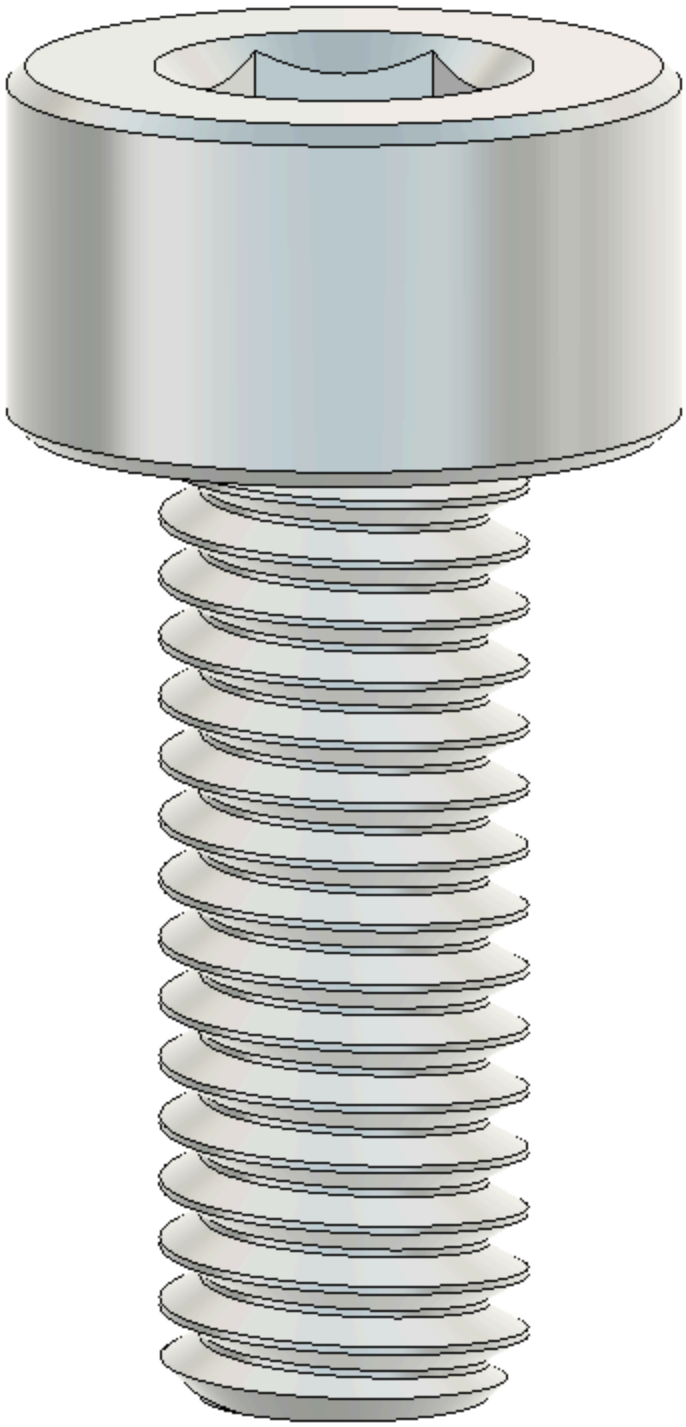

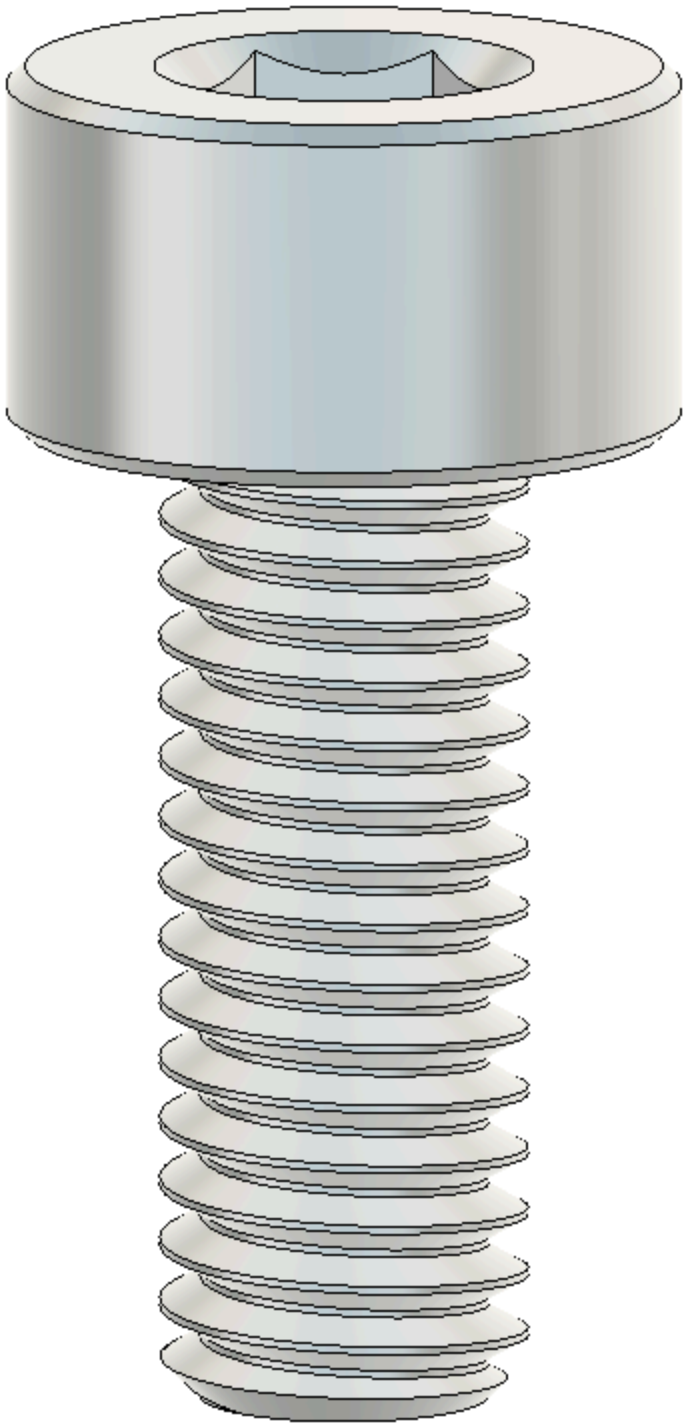

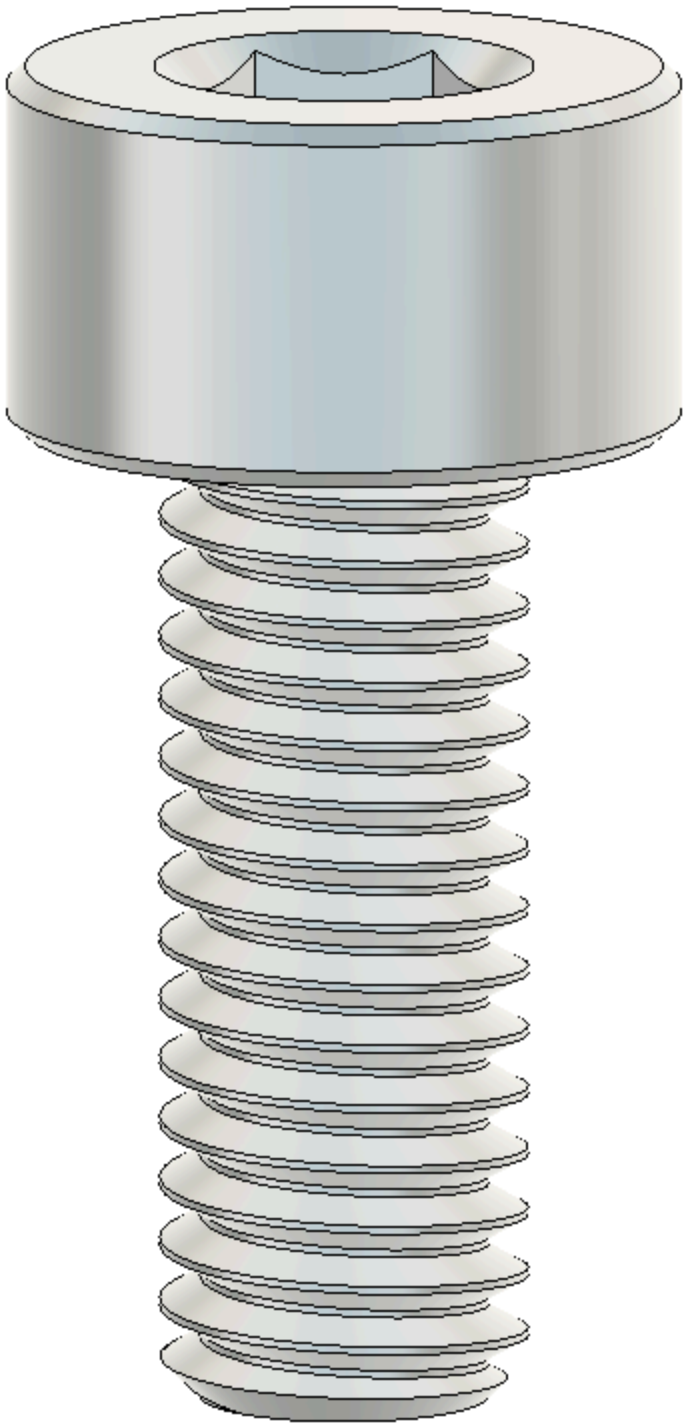

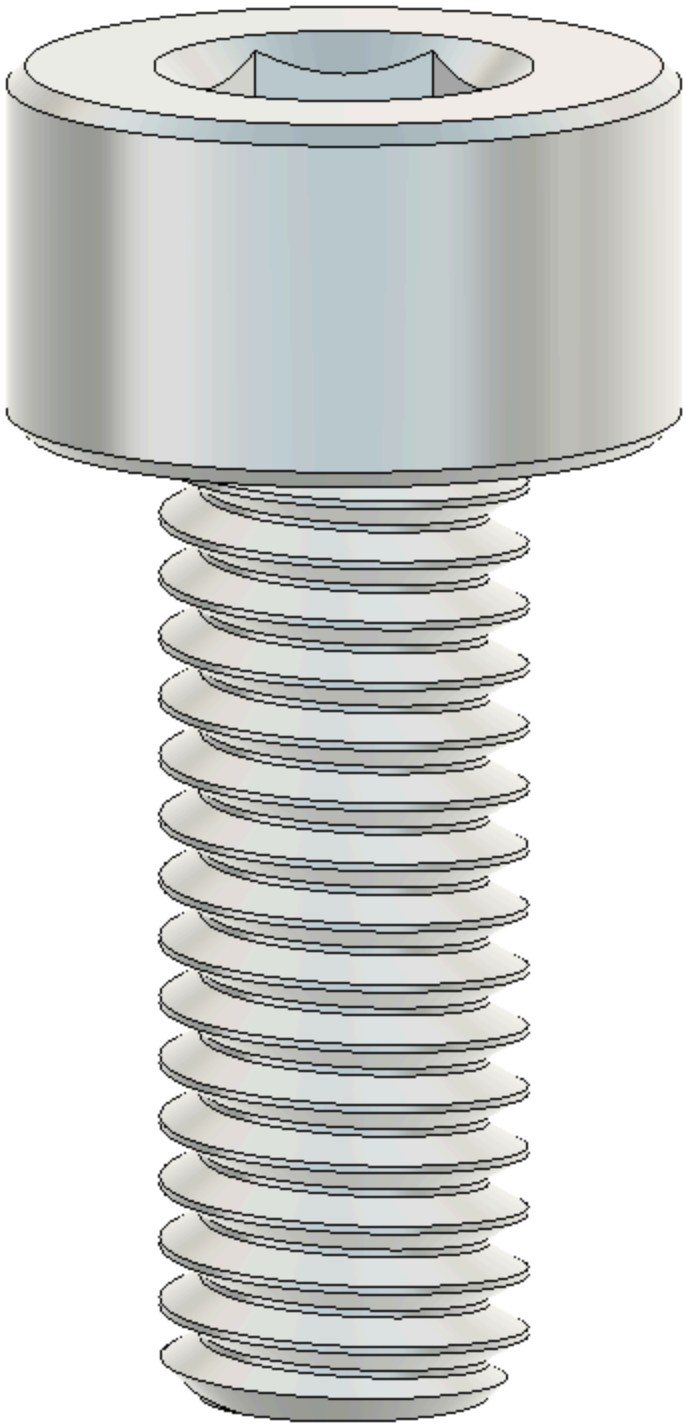

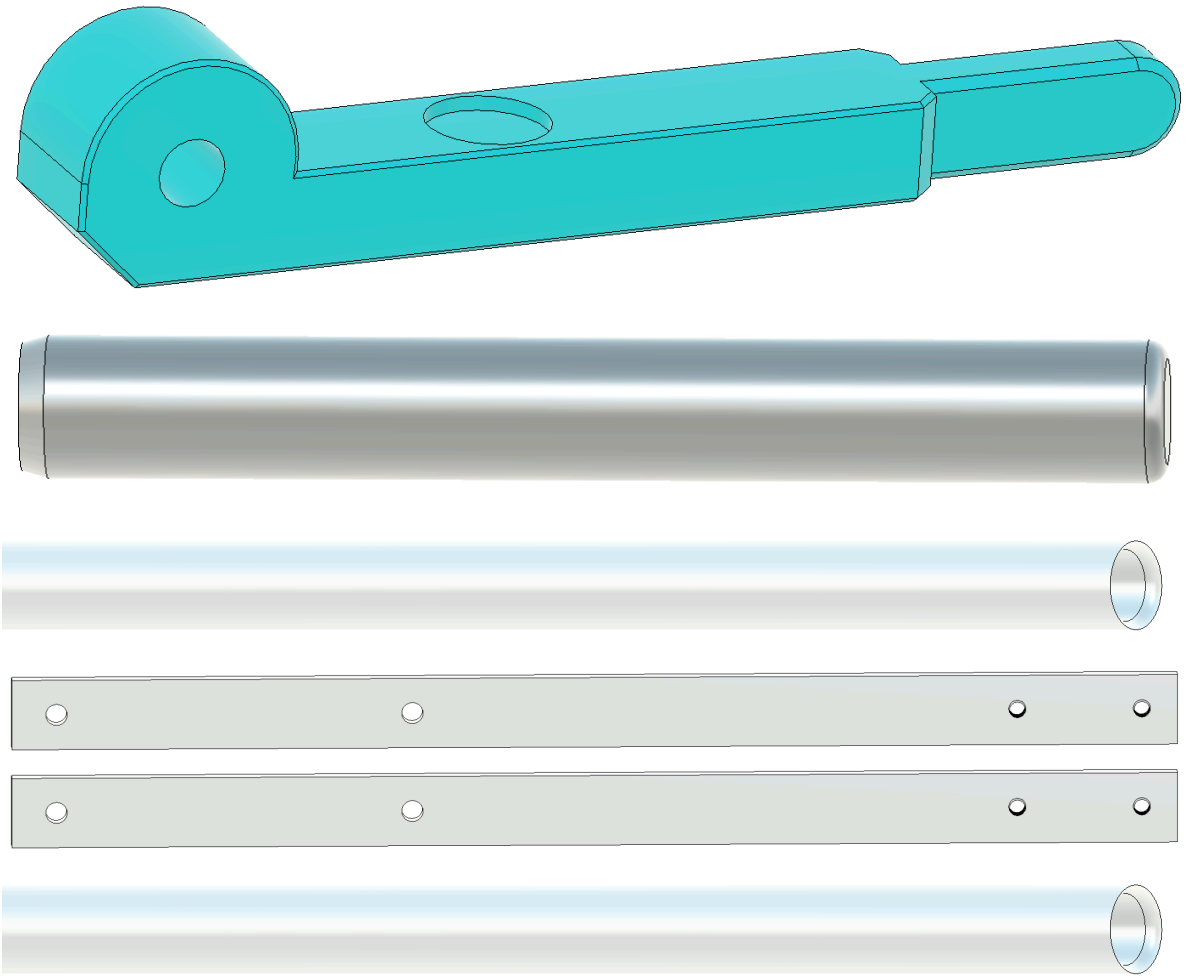

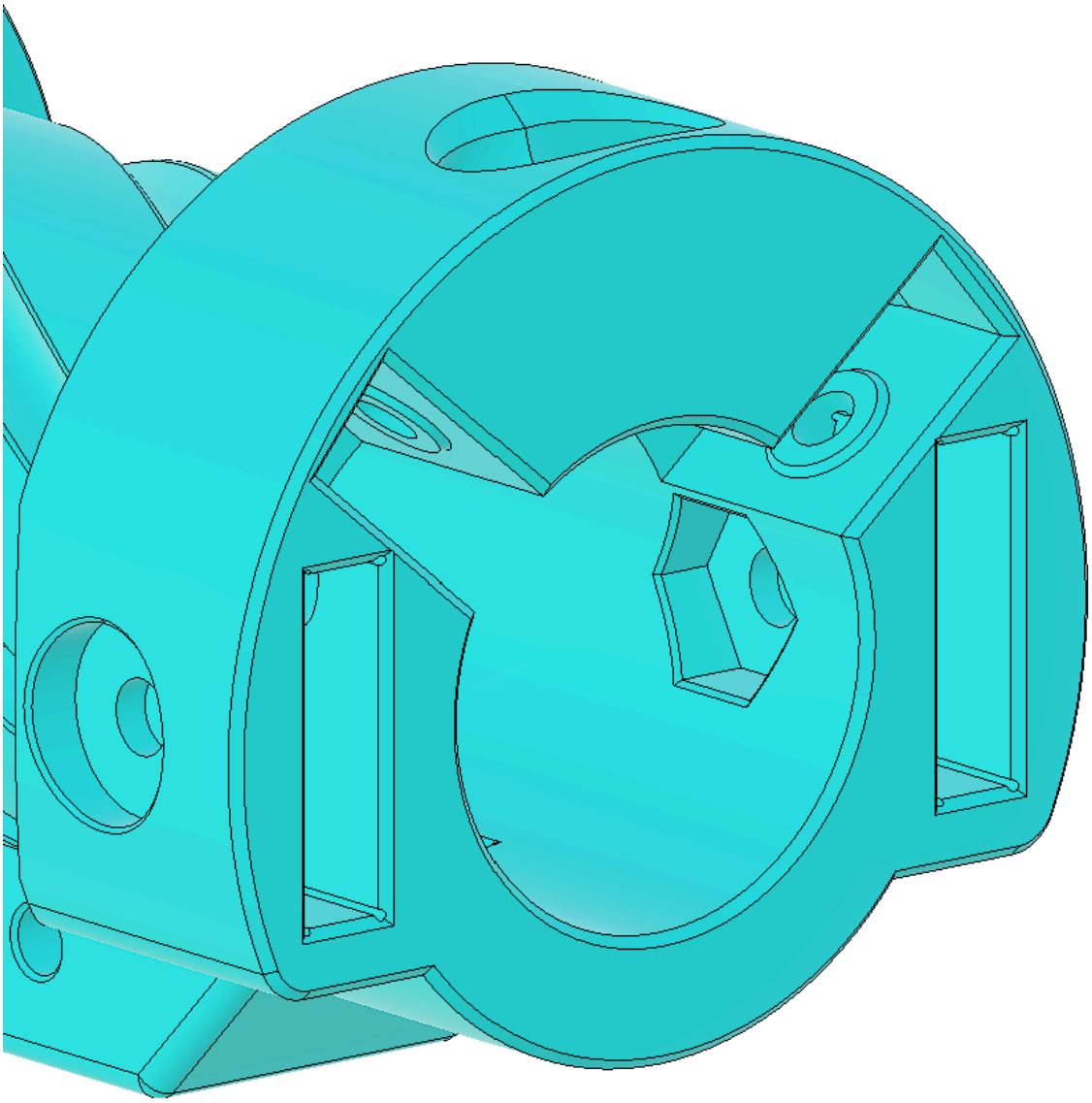

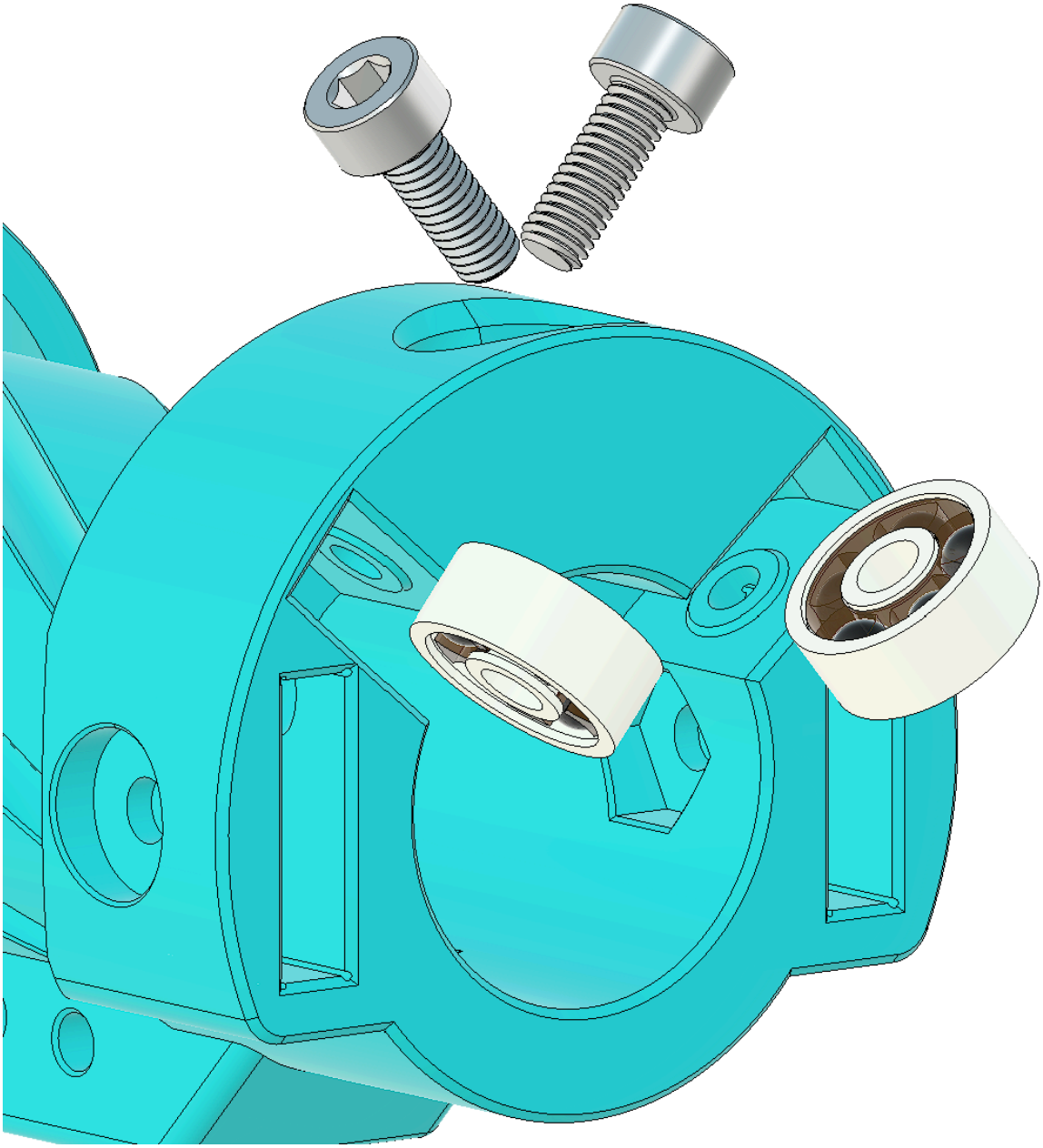

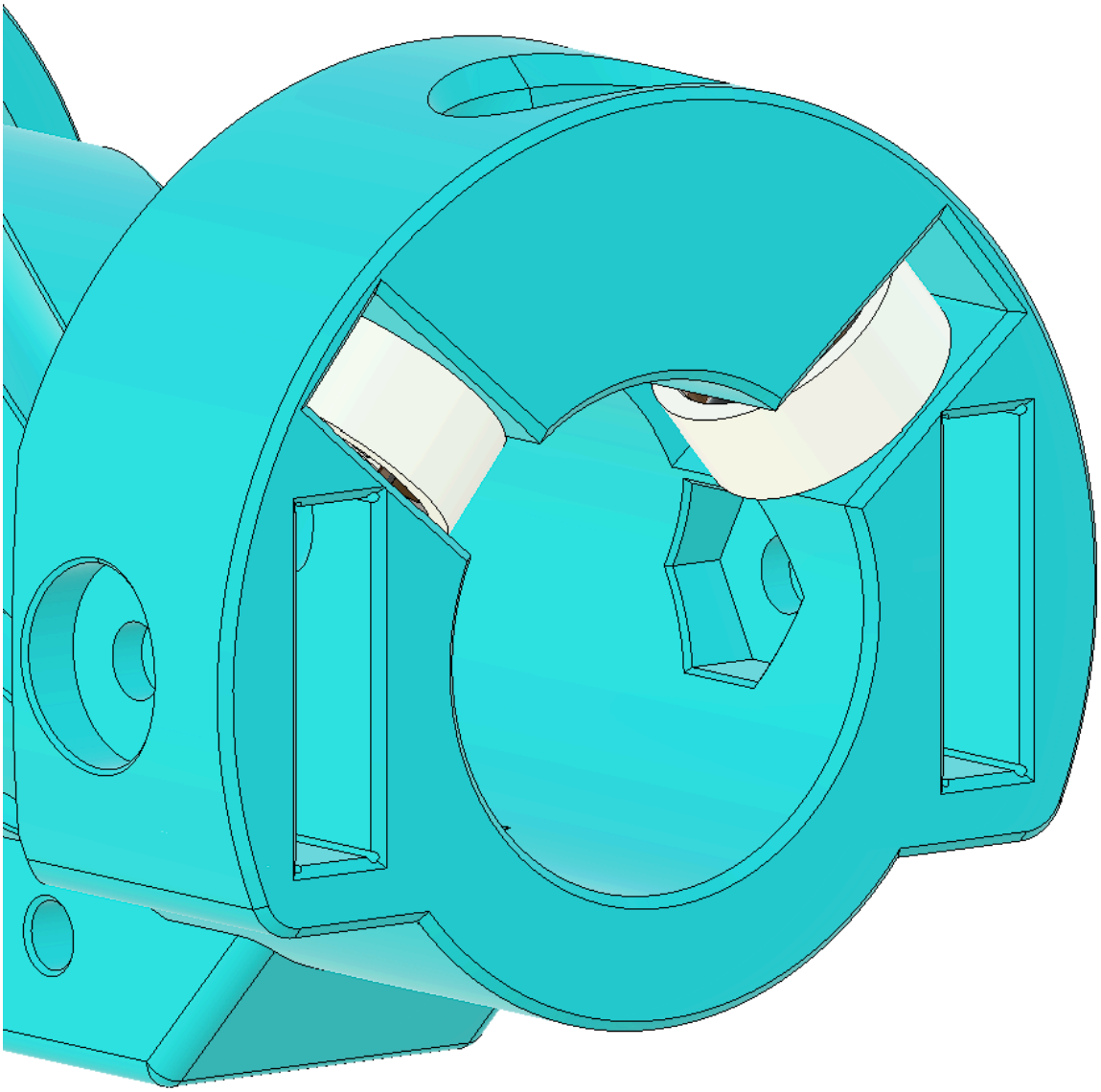

Step 2

On the rear of the PrimeBlock, attach (2) 623 POM Bearings using (2) 8mm M3 Socket Head Screws. As these bearings are farther in, it can be easier to insert them with the PrimeBlock upside-down. Again be careful to not crush the bearing , and do not overtighten.

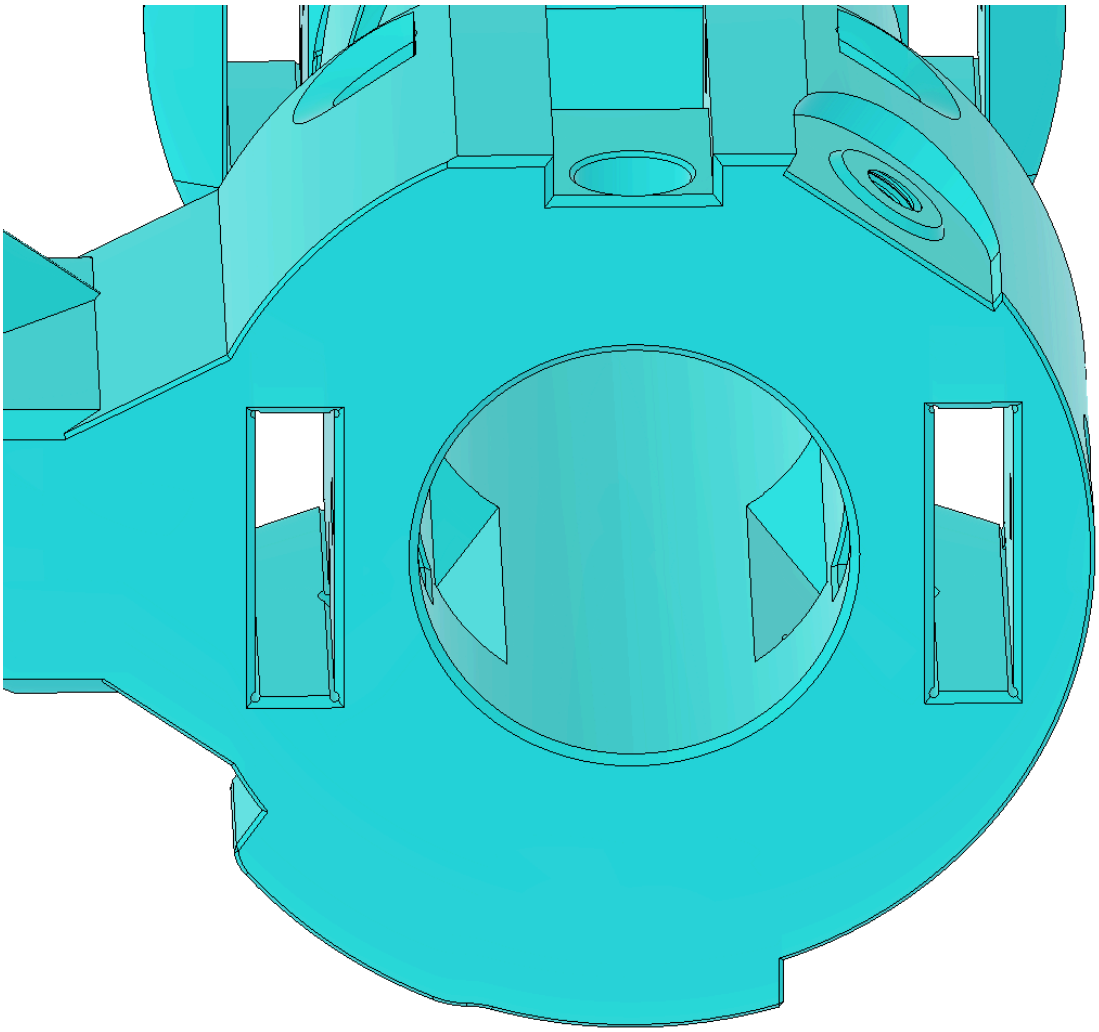

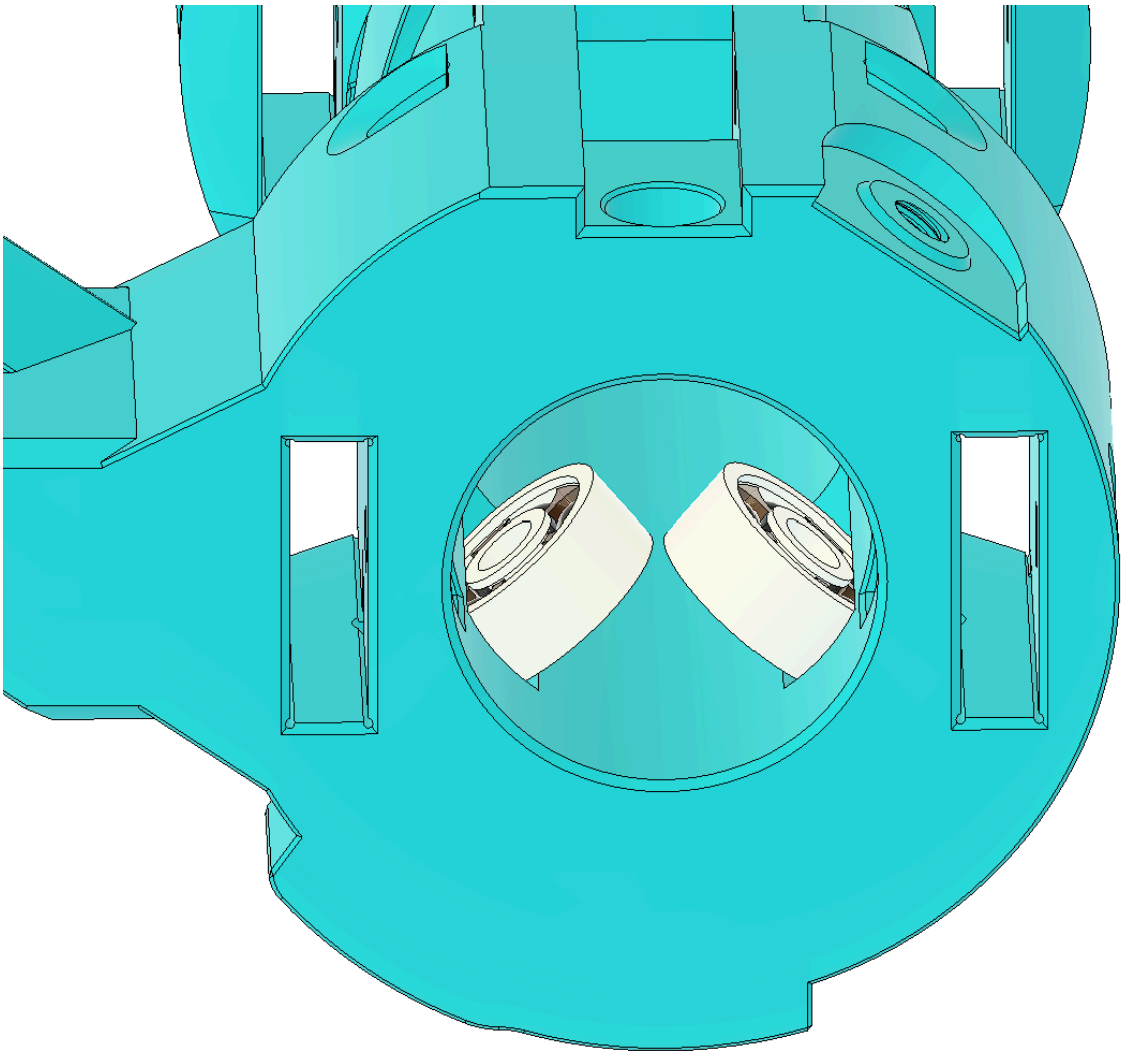

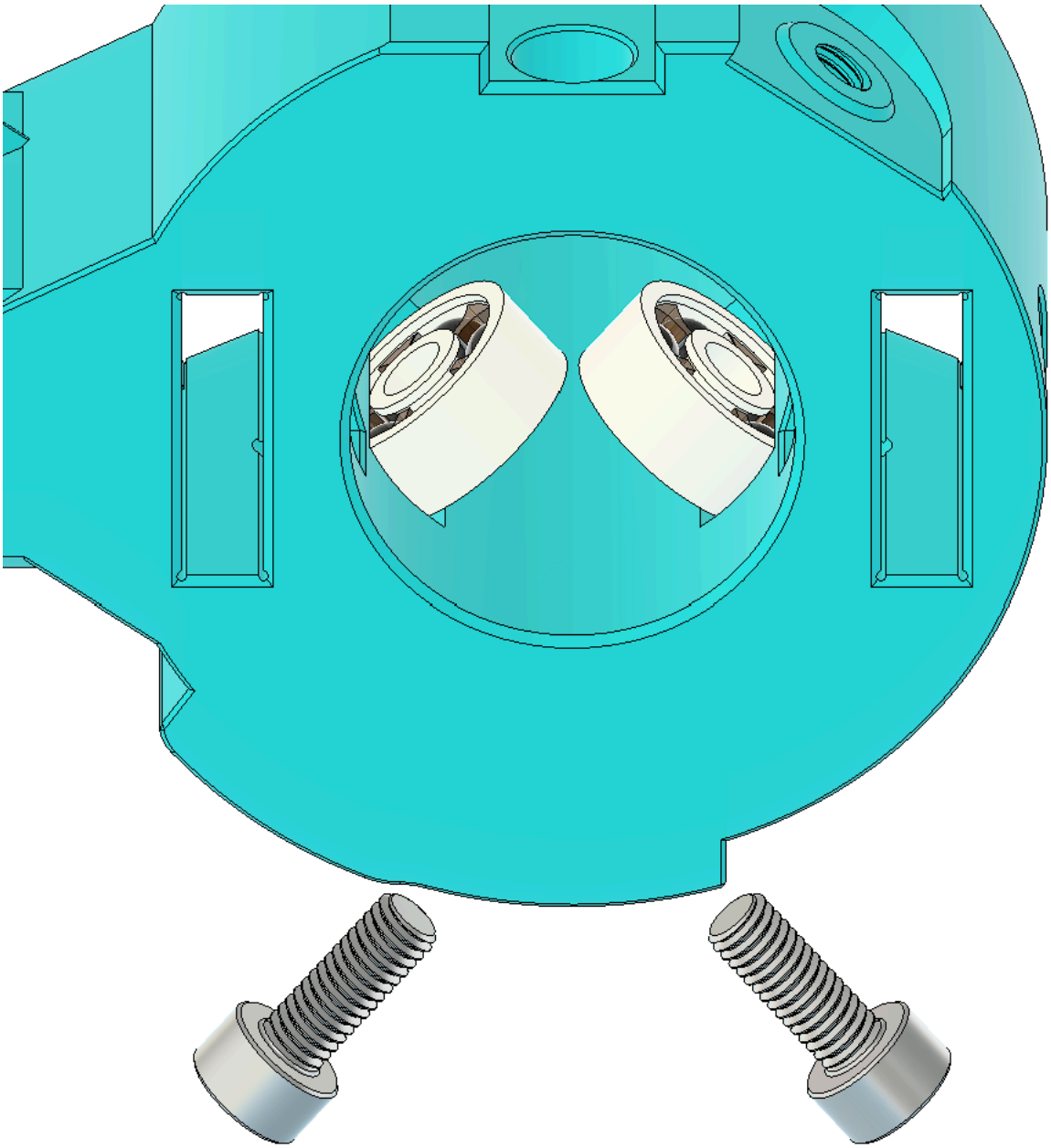

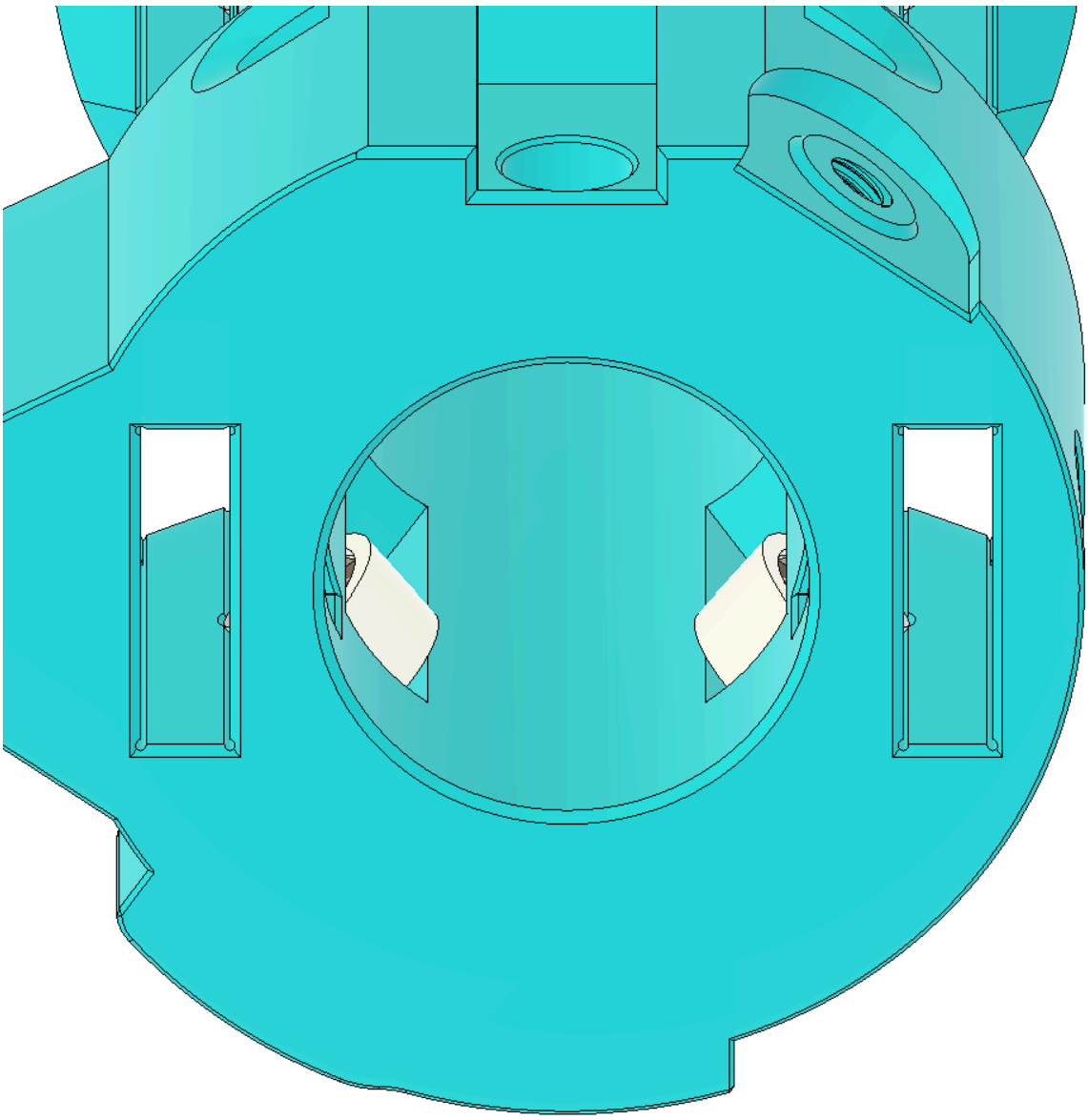

Step 3

Rotate the PrimeBlock upside-down then insert the Barrel through the center. Place a single 623 POM Bearing in the center slot.

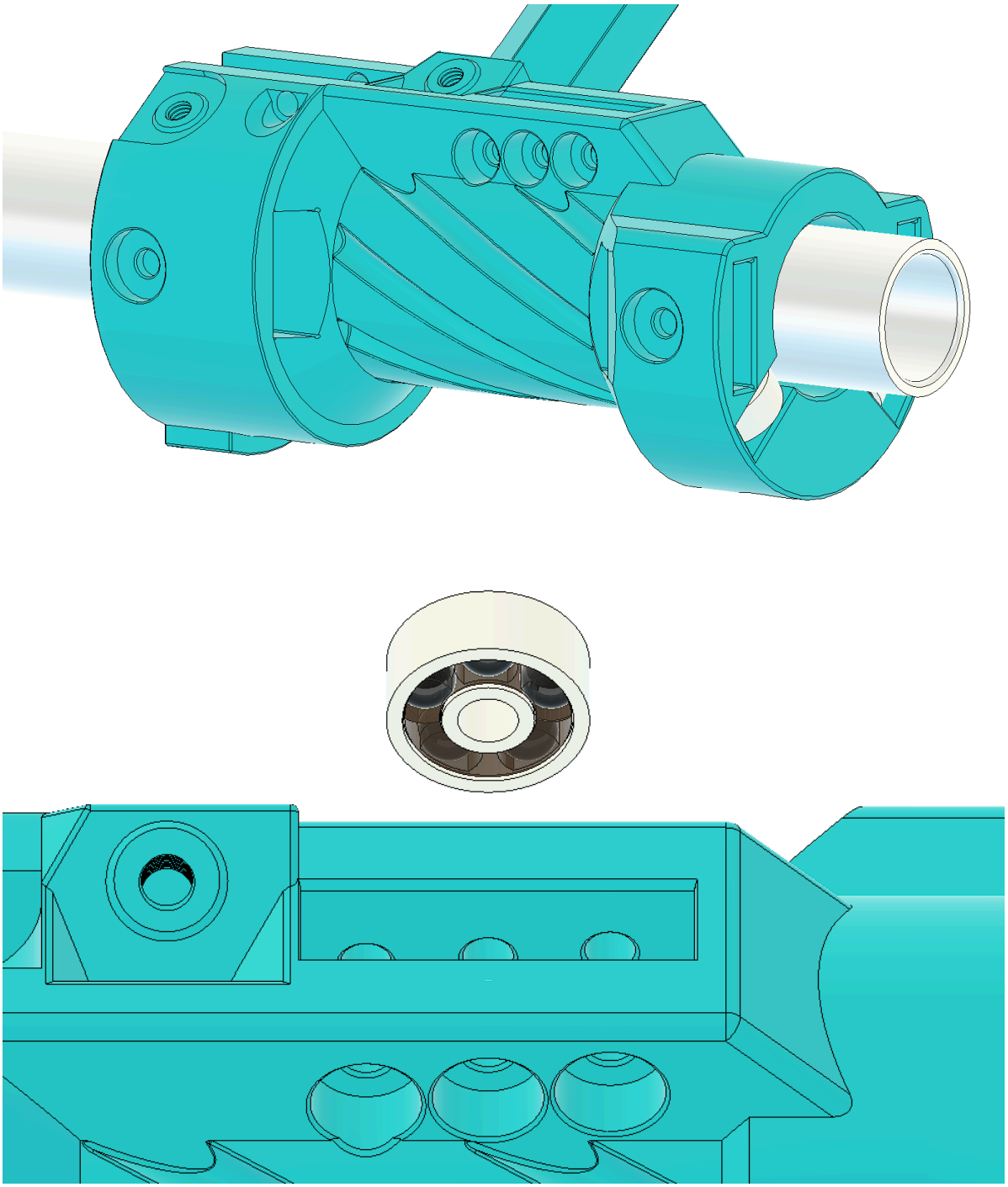

Step 4

Using the Barrel as reference, identify the bearing positioning that best fits given your printer tolerances and barrel sizing. The Barrel should slide easily without being too loose. Once you have determined the ideal positioning, secure the bearing with a single 8mm M3 Socket Head Screw.

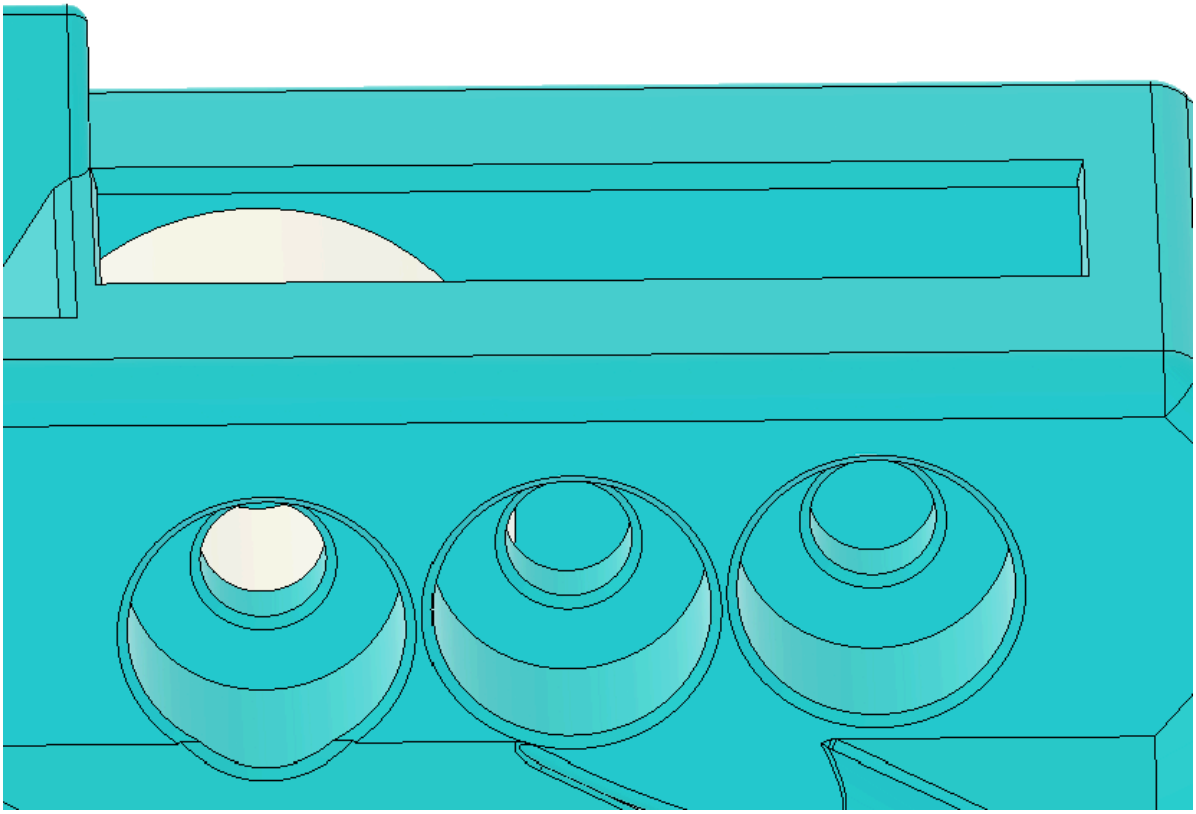

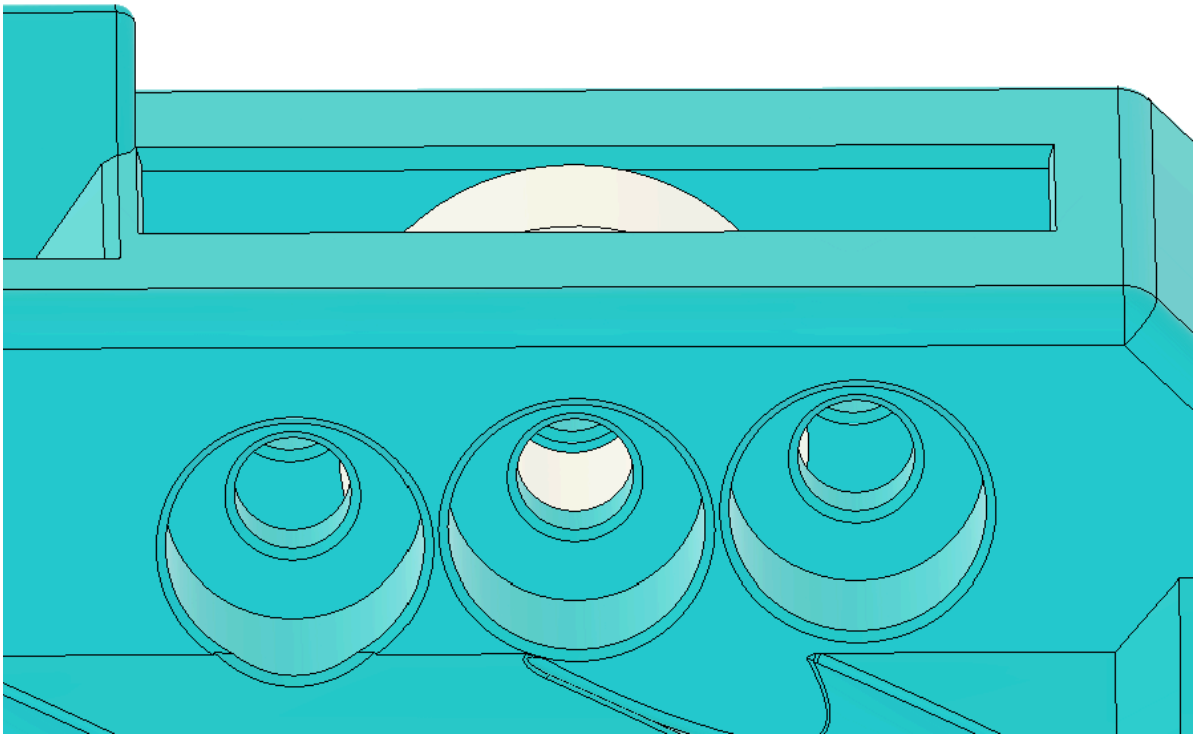

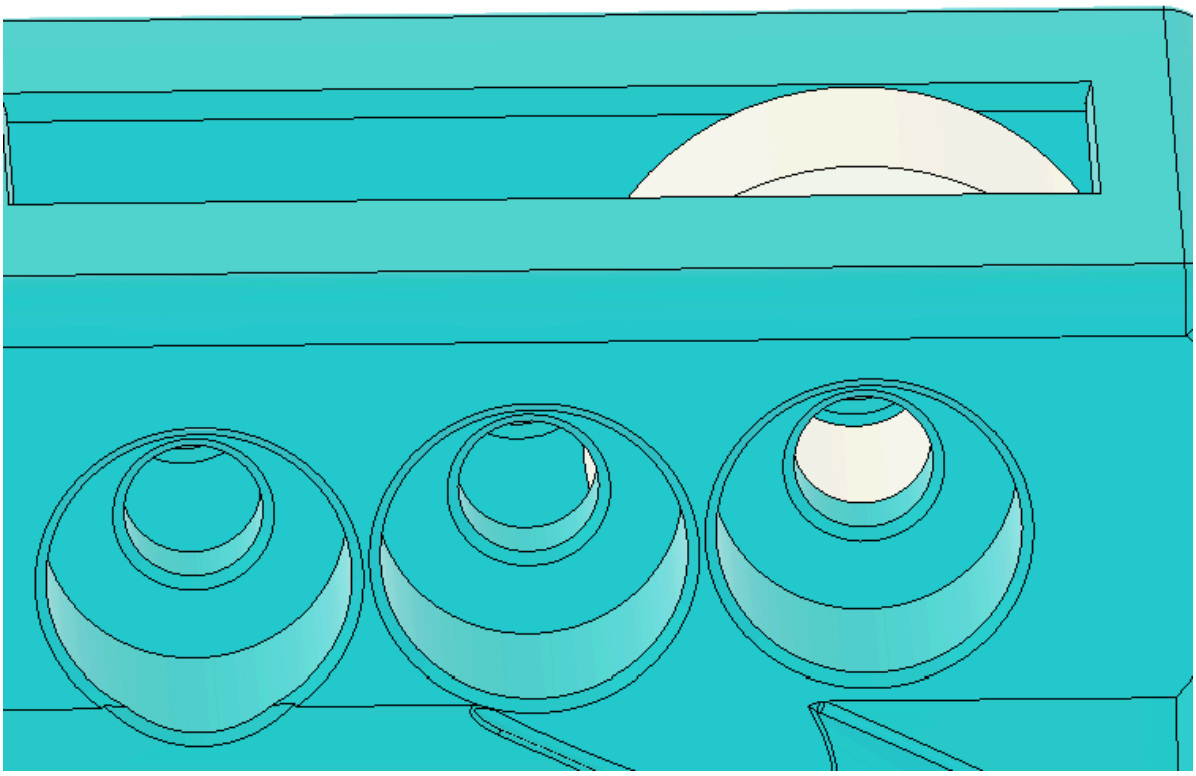

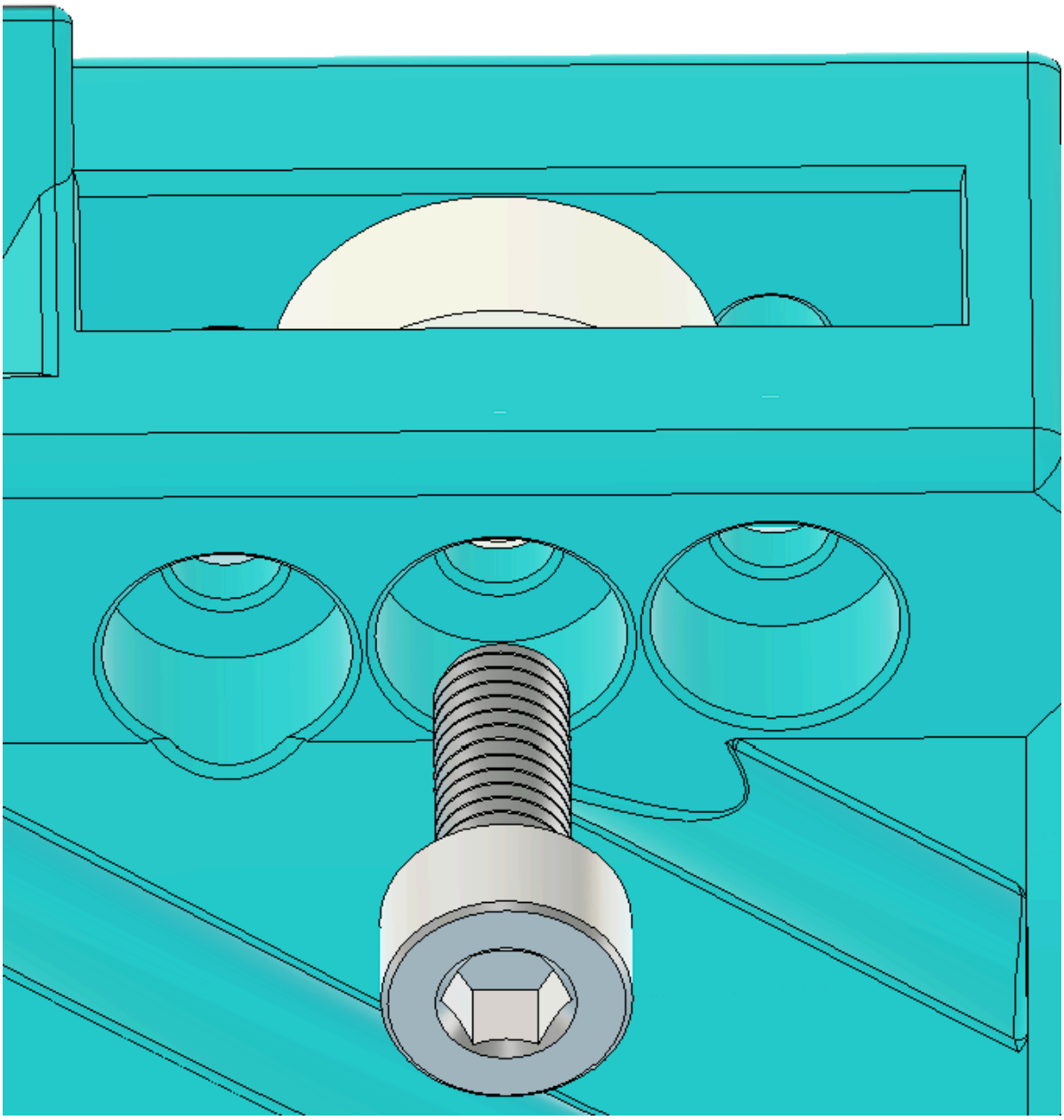

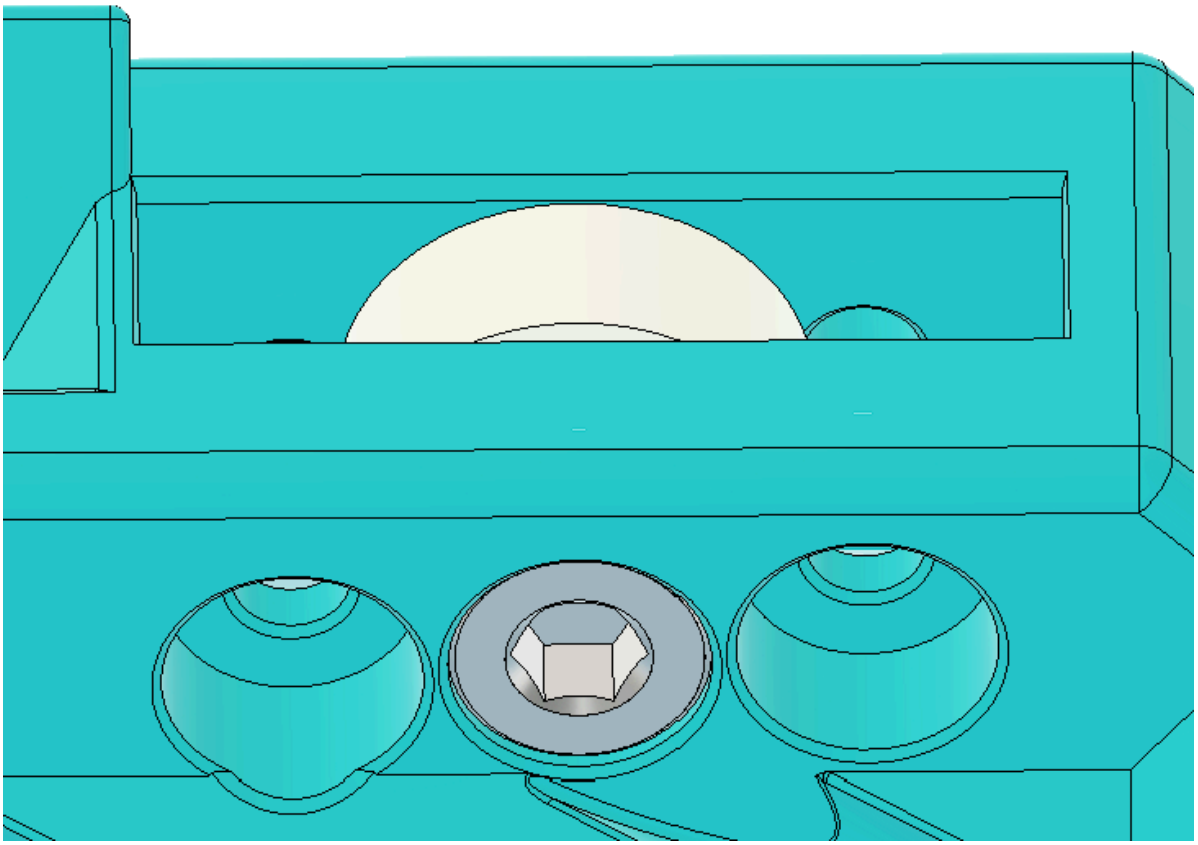

Step 5

Take the PumpBars, and line them up with the back of the PrimeBlock. Make sure the side with the farther spaced holes faces the PrimeBlock (top photo). Then, slide them into the PrimeBlock until flush with the front (bottom photo) and make sure the holes align. The bars may be a tight fit, and may need gentle encouragement with a mallet or hammer.

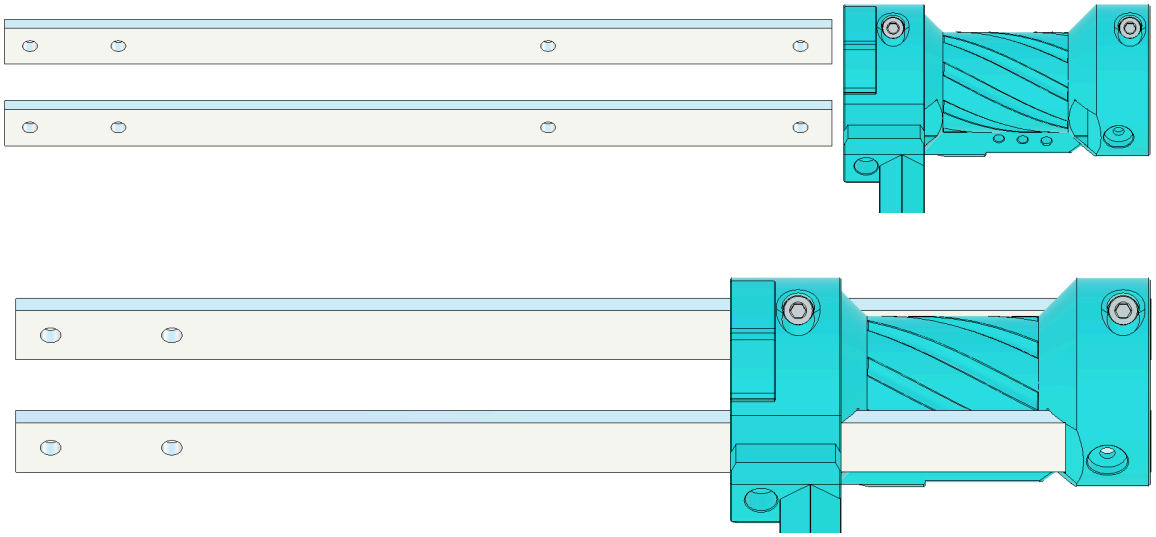

Step 6

Take the CatchLever, and line it up with the bottom rear of the PrimeBlock. Slide it into the cutout, and make sure the hole aligns.

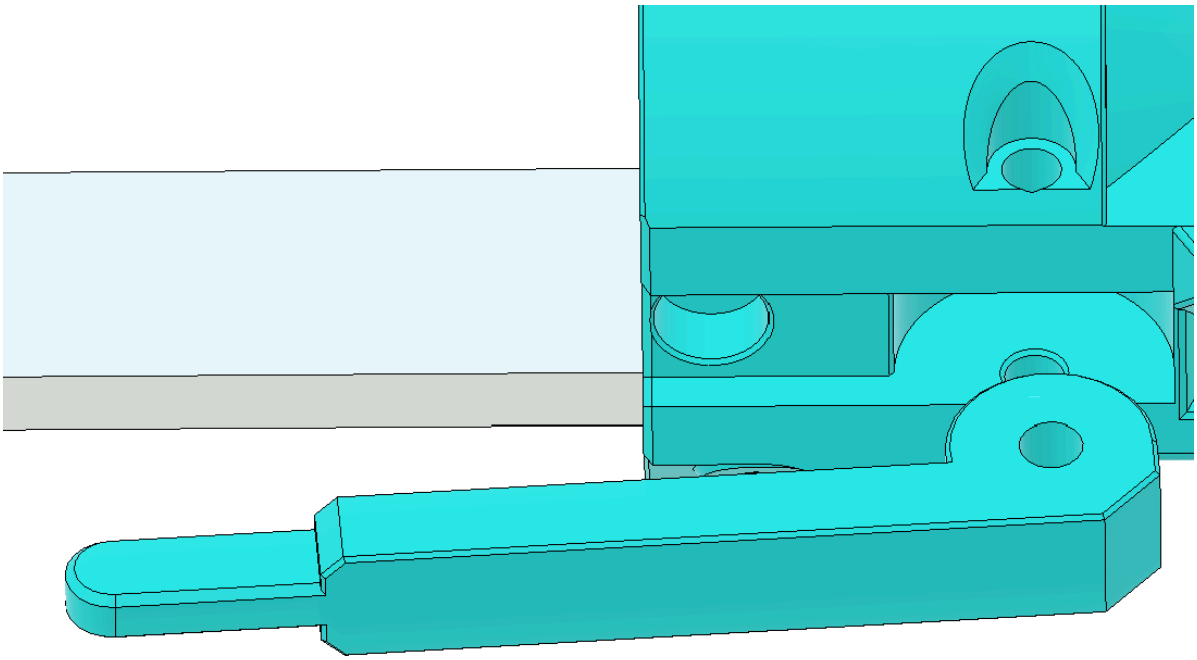

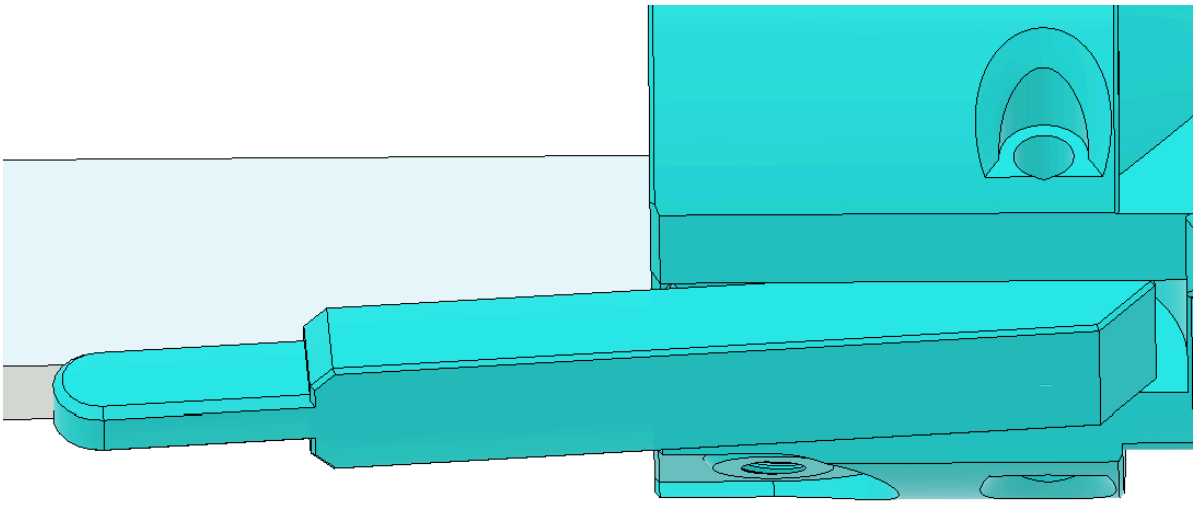

Step 7
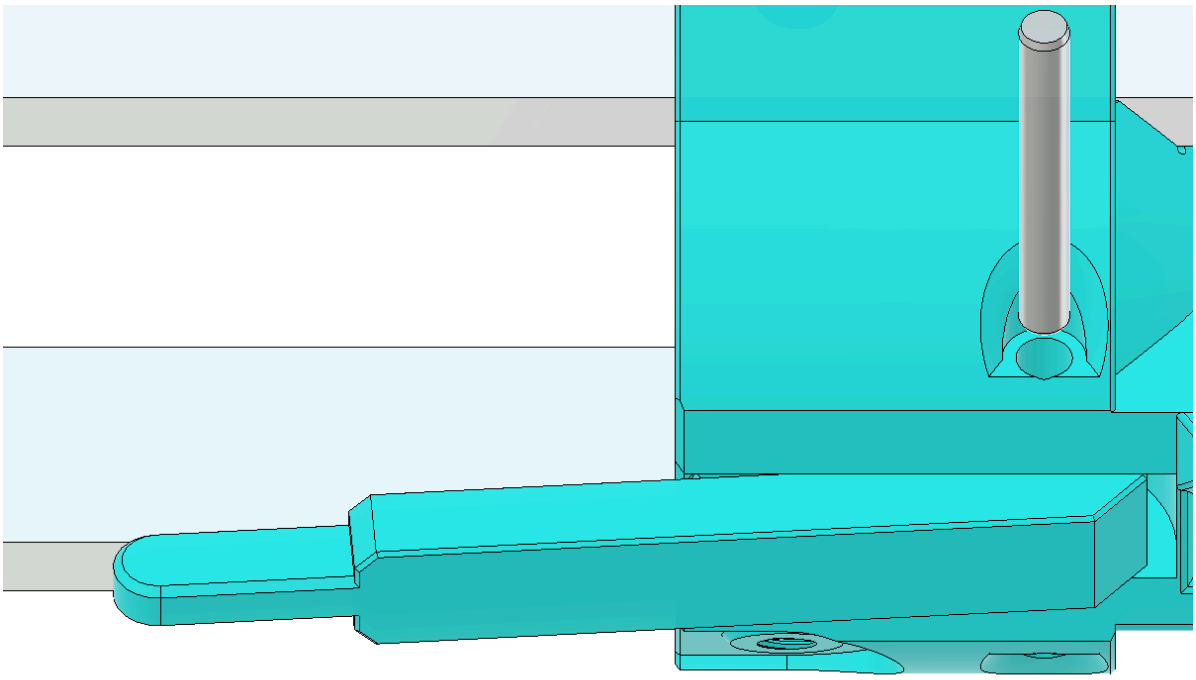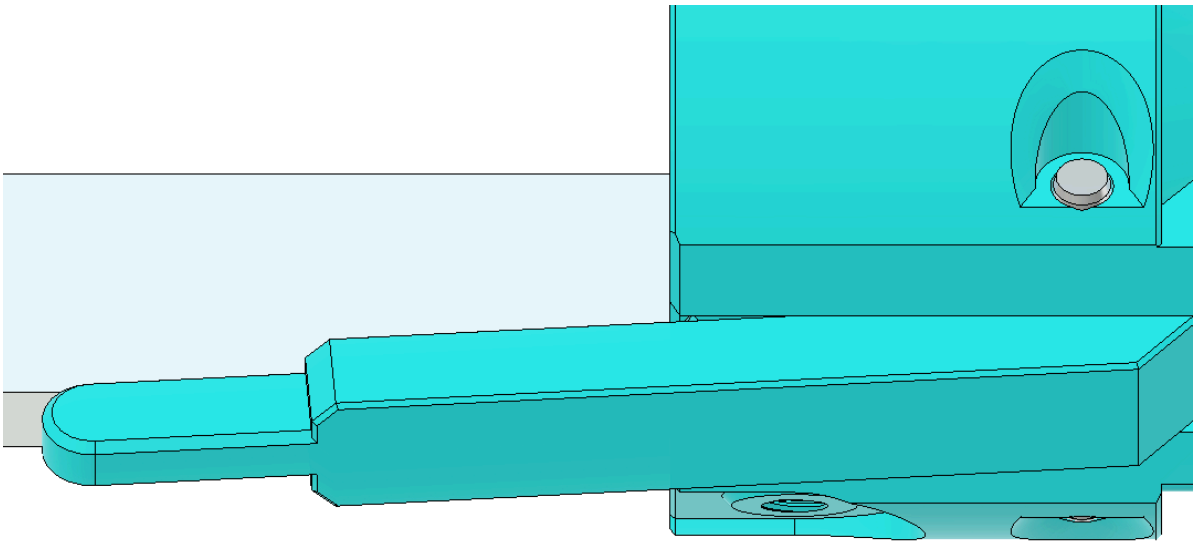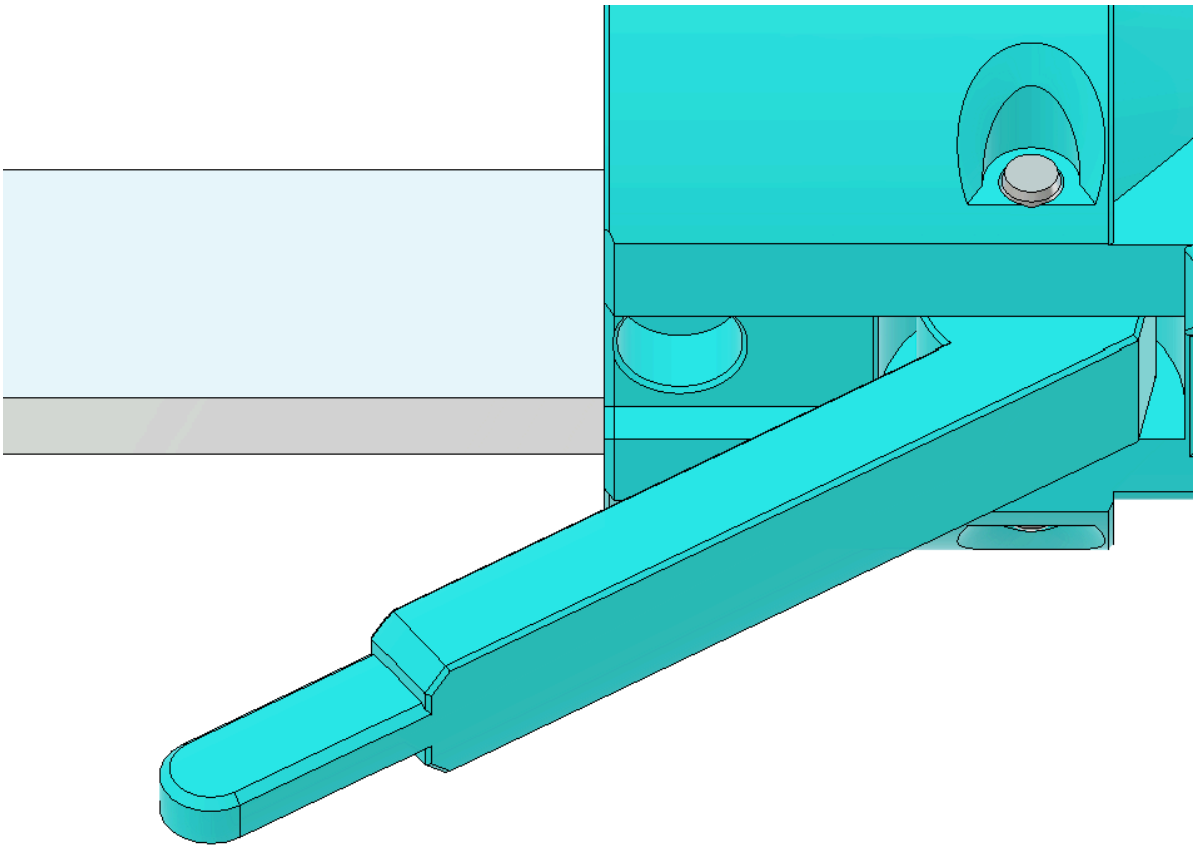
Insert a single 3/32in by ¾ in Dowel through the side of the PrimeBlock, securing the CatchLever in place. This may require some hammering or pushing in with pliers. Once the dowel is inserted and flush, make sure the CatchLever is able to rotate freely.