Dual Straight Pull Assembly

Steps

Step 1
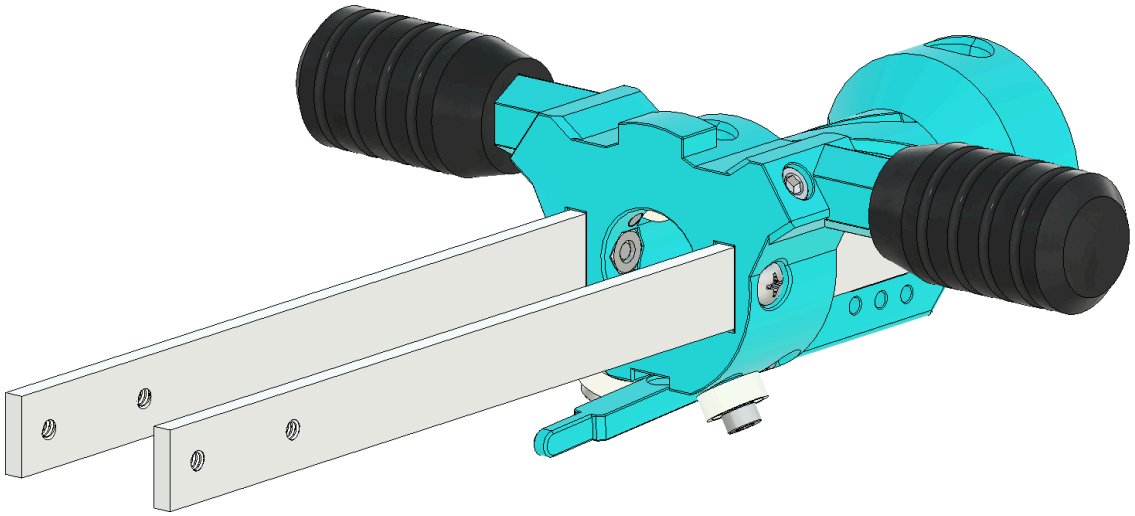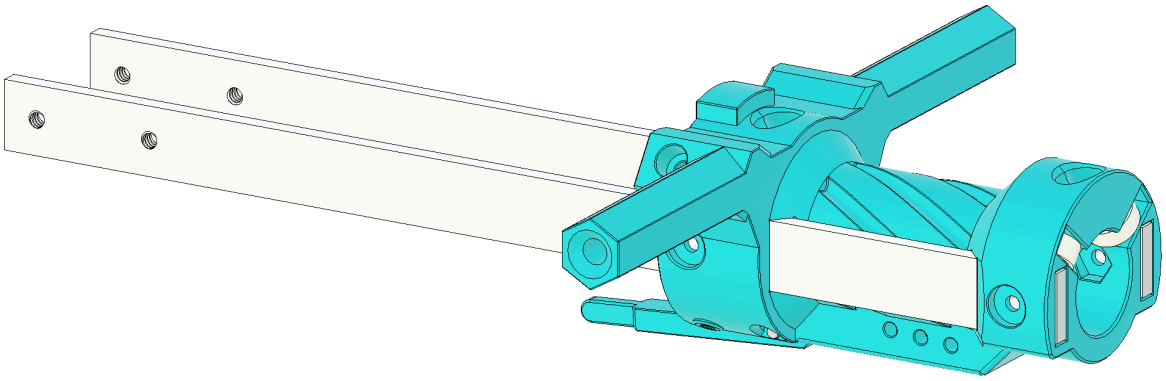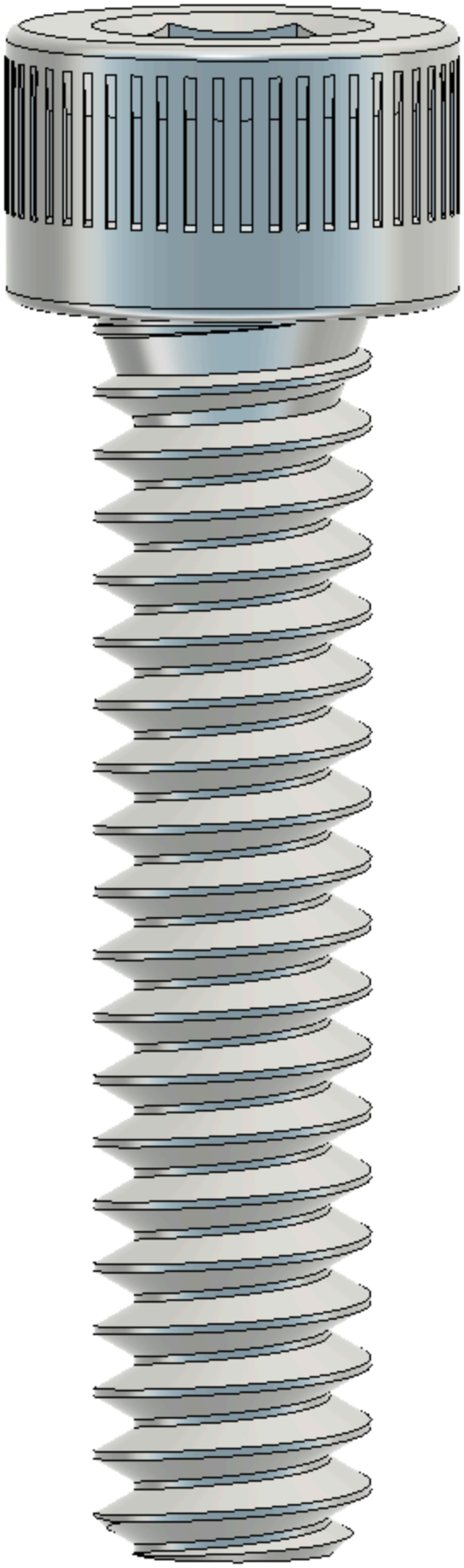
On the front of the PrimeBlock, insert a 6-32 Hex Nut into the cutout on the inside and screw in a 6-32 $^{5}/_{16}$" Phillips Screw from the outside to secure it, making sure it goes through the Pump Bar. Repeat on the other side on the front of the PrimeBlock.