Railgun Variant

Steps

Step 1
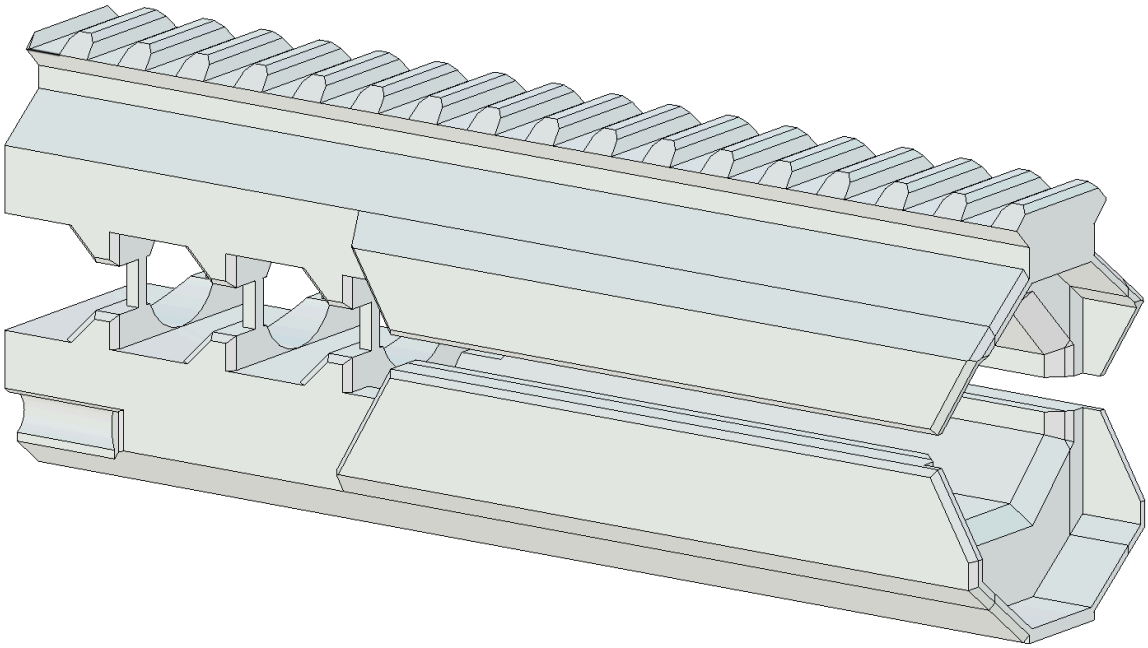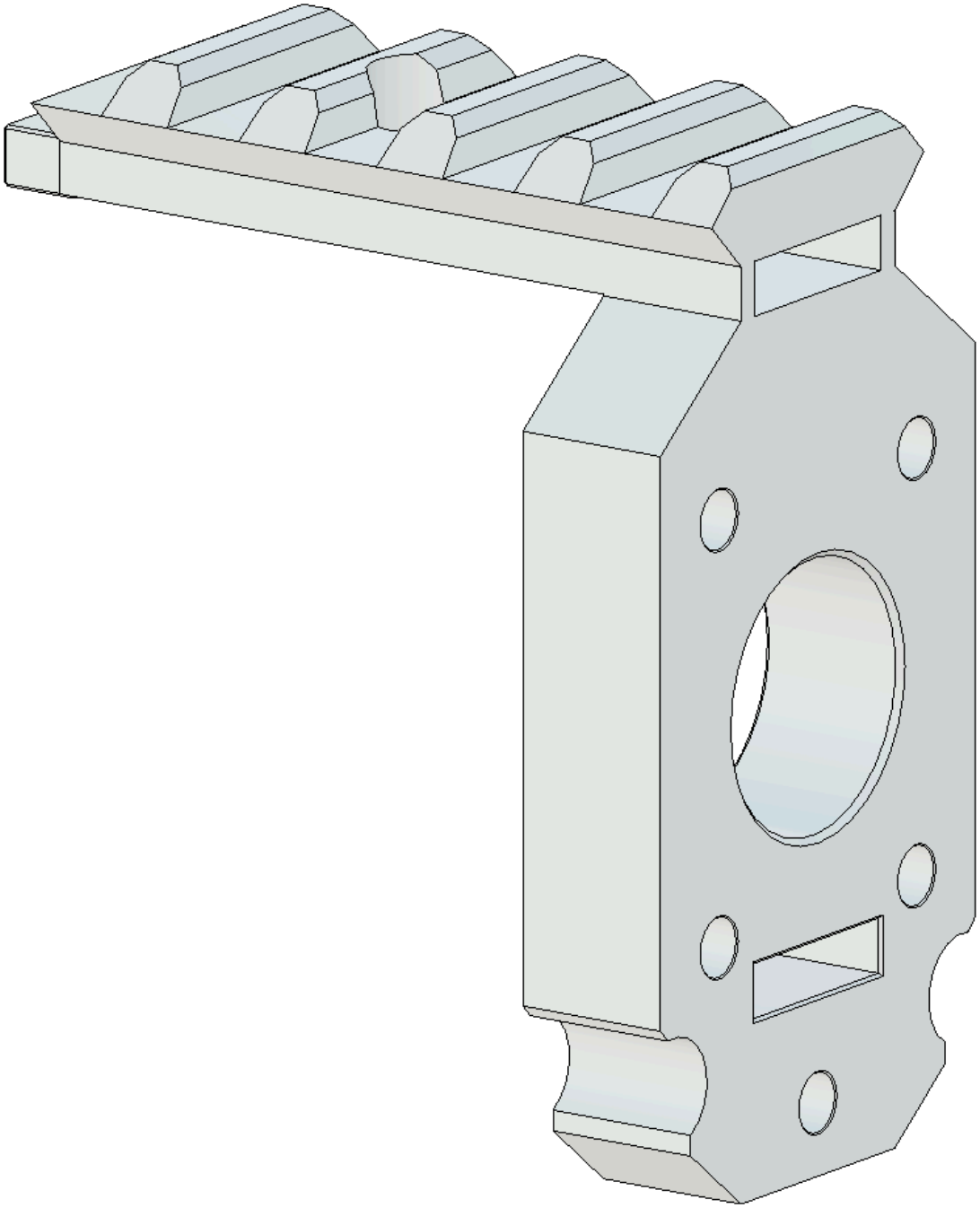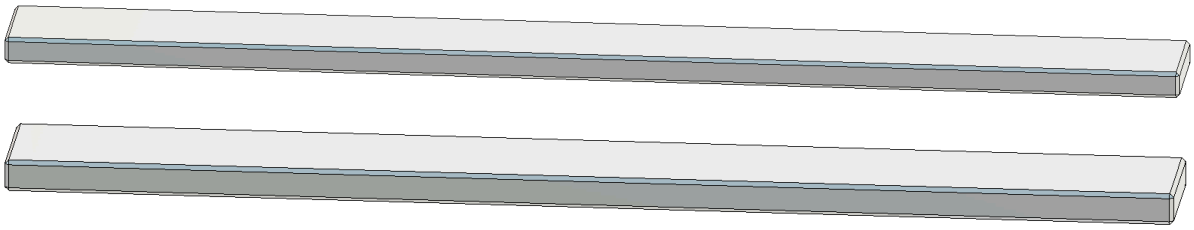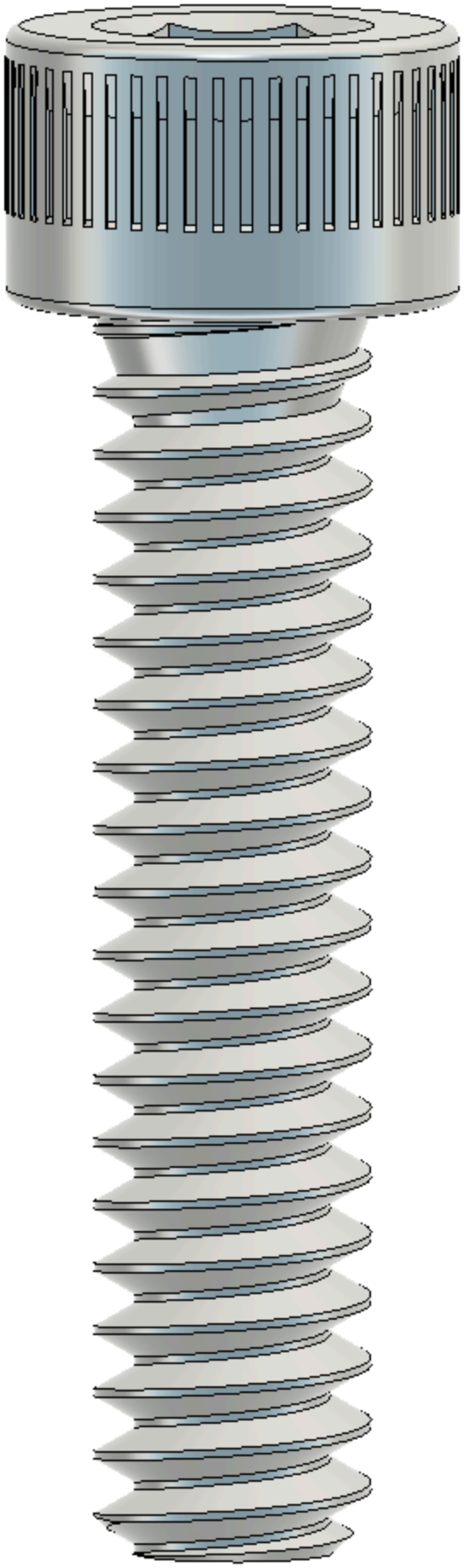
Install your chosen length of RG_BottomRail to the bottom of RG_MainBody with (3) 6-32 $^{5}/_{16}$" Phillips Screws.