Stock/Magwell Assembly

View Materials List

Steps

Step 1
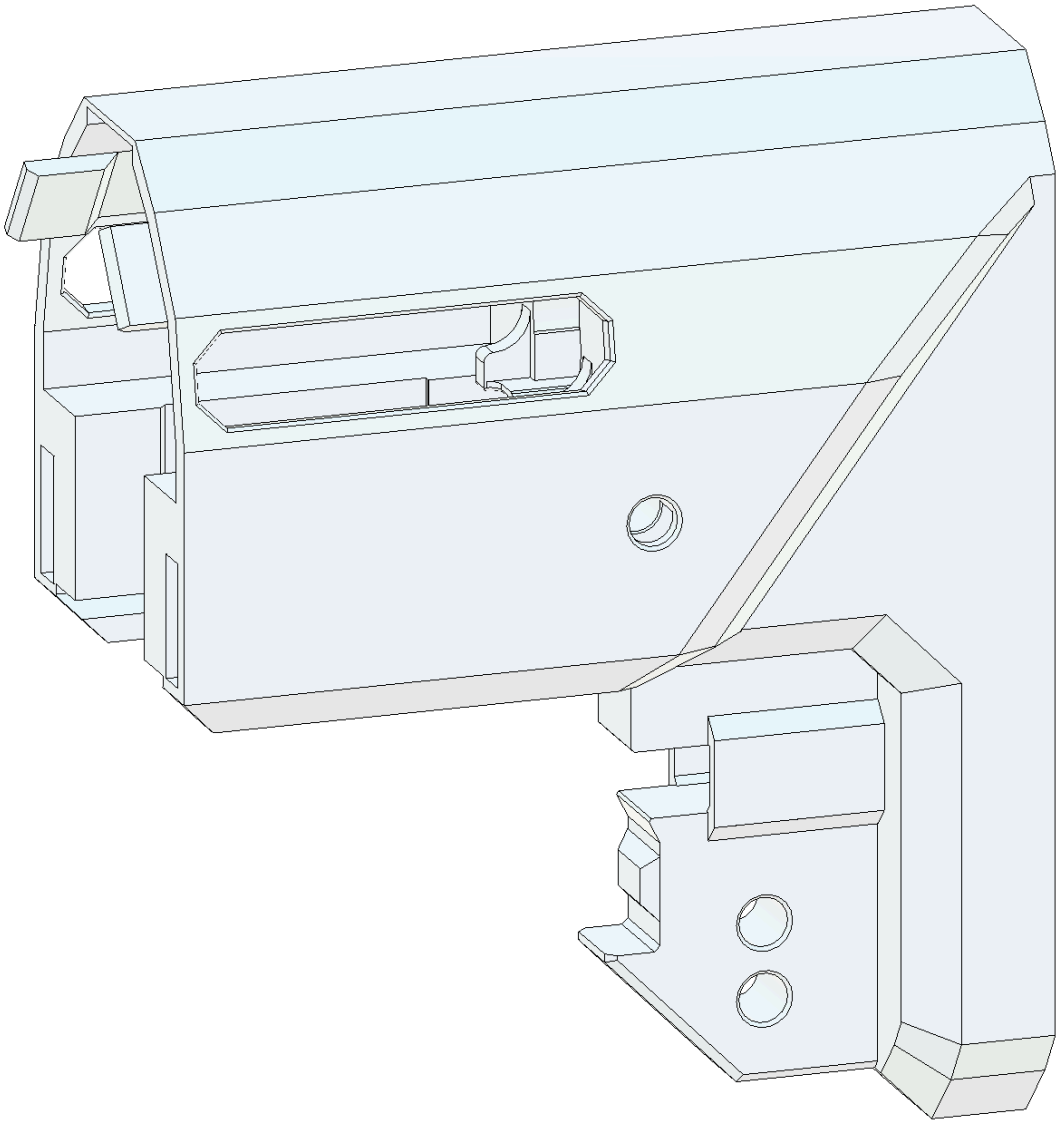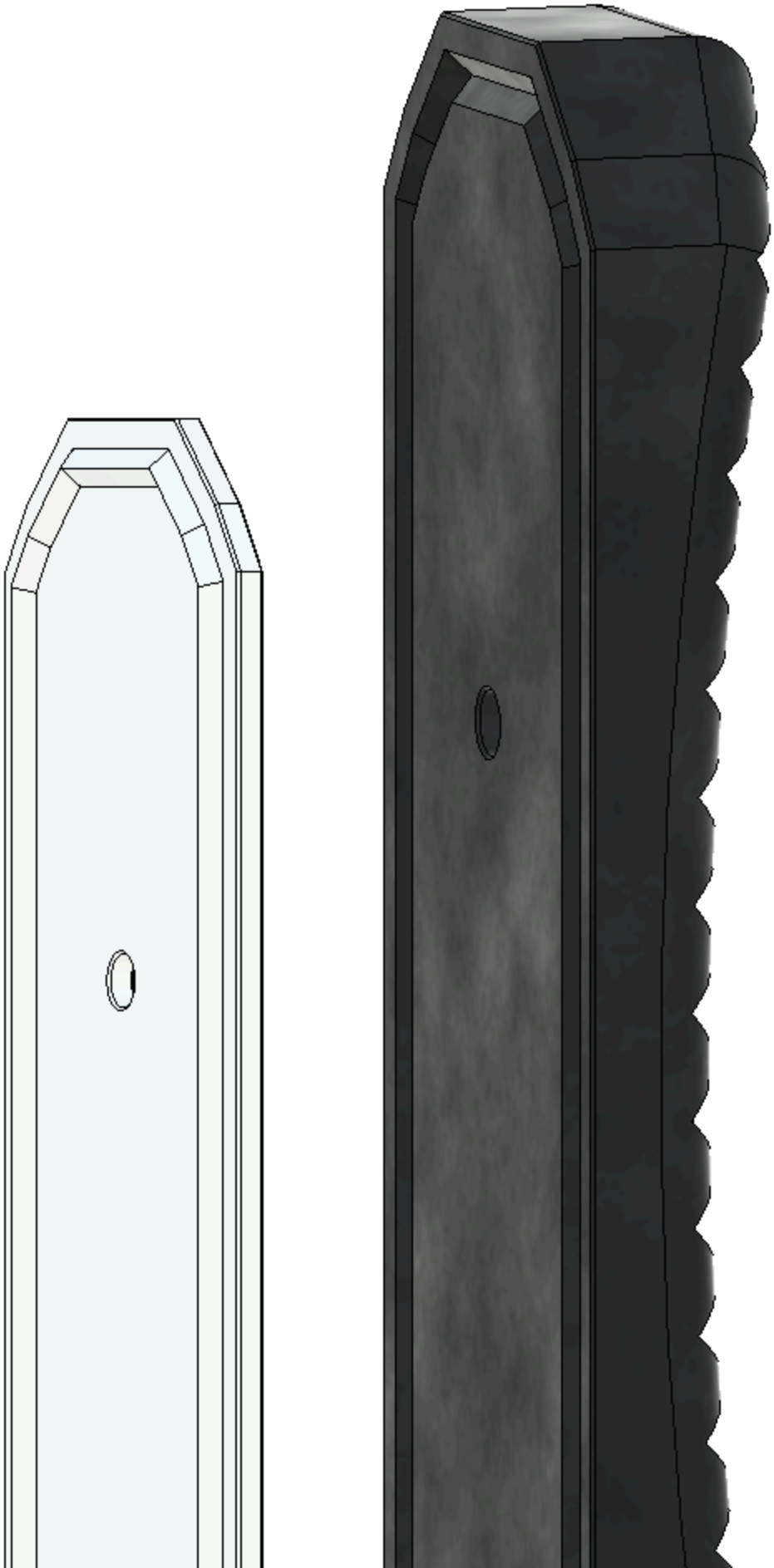
Note: This step is optional. The StockButt can be used as is without StockButtBackplate. When printing StockButt out of a soft filament, e.g. TPU, however the StockButtBackplate can be useful to add rigidity and prevent the StockButt from peeling off the Stock and to have a more secure attachment point.