Turnaround Assembly

View Materials List

Steps

Step 1

The Plunger Tube Assembly consists of the PlungerTube as well as the components that hold it on either end. The PlungerTube ultimately houses the Plunger Sub Assembly. Upon firing, the PlungerHead moves rapidly down the PlungerTube, moving air back and into the Turnaround which then redirects air into the Barrel behind the dart.

Step 2
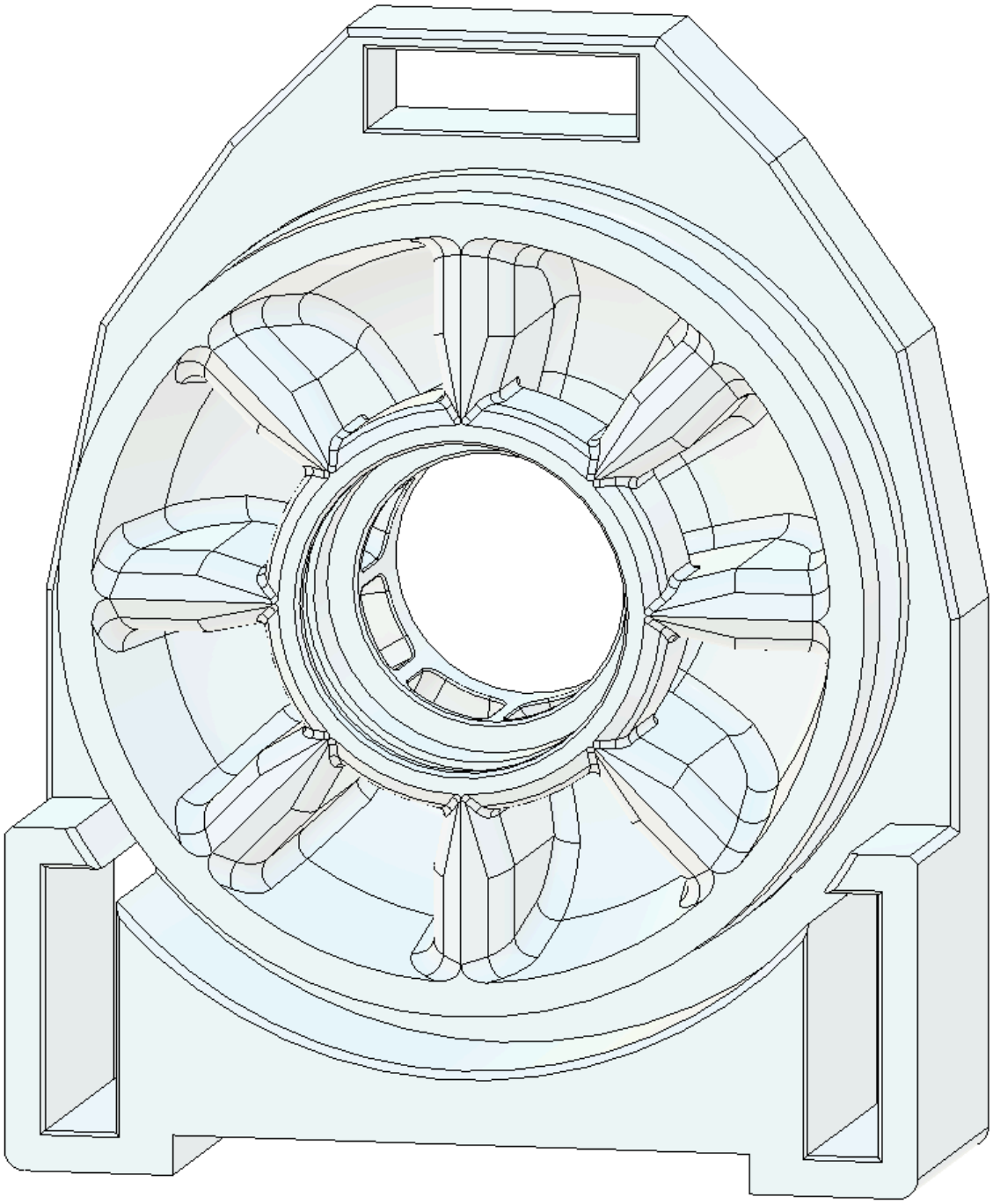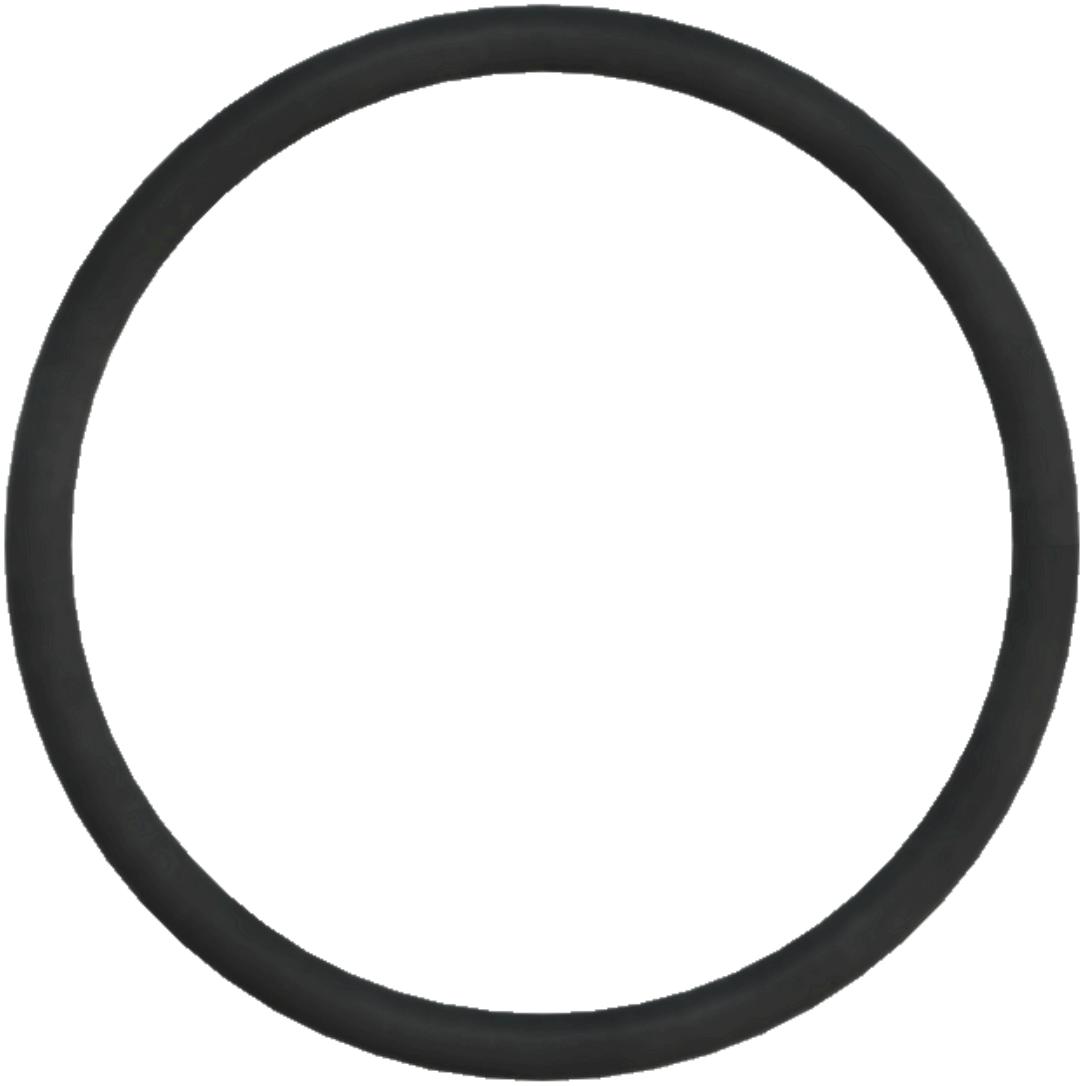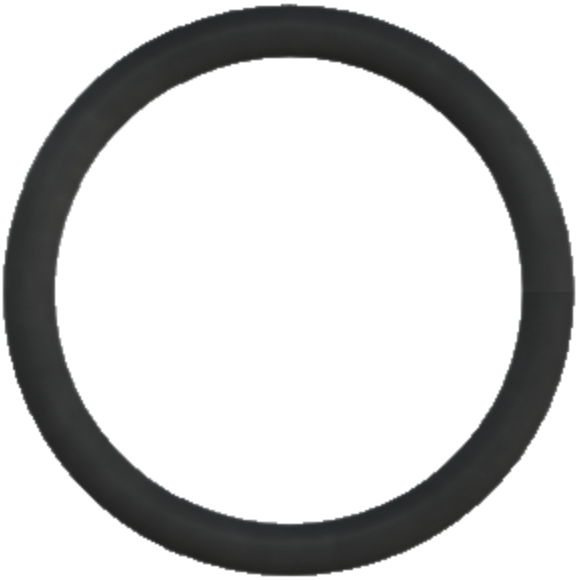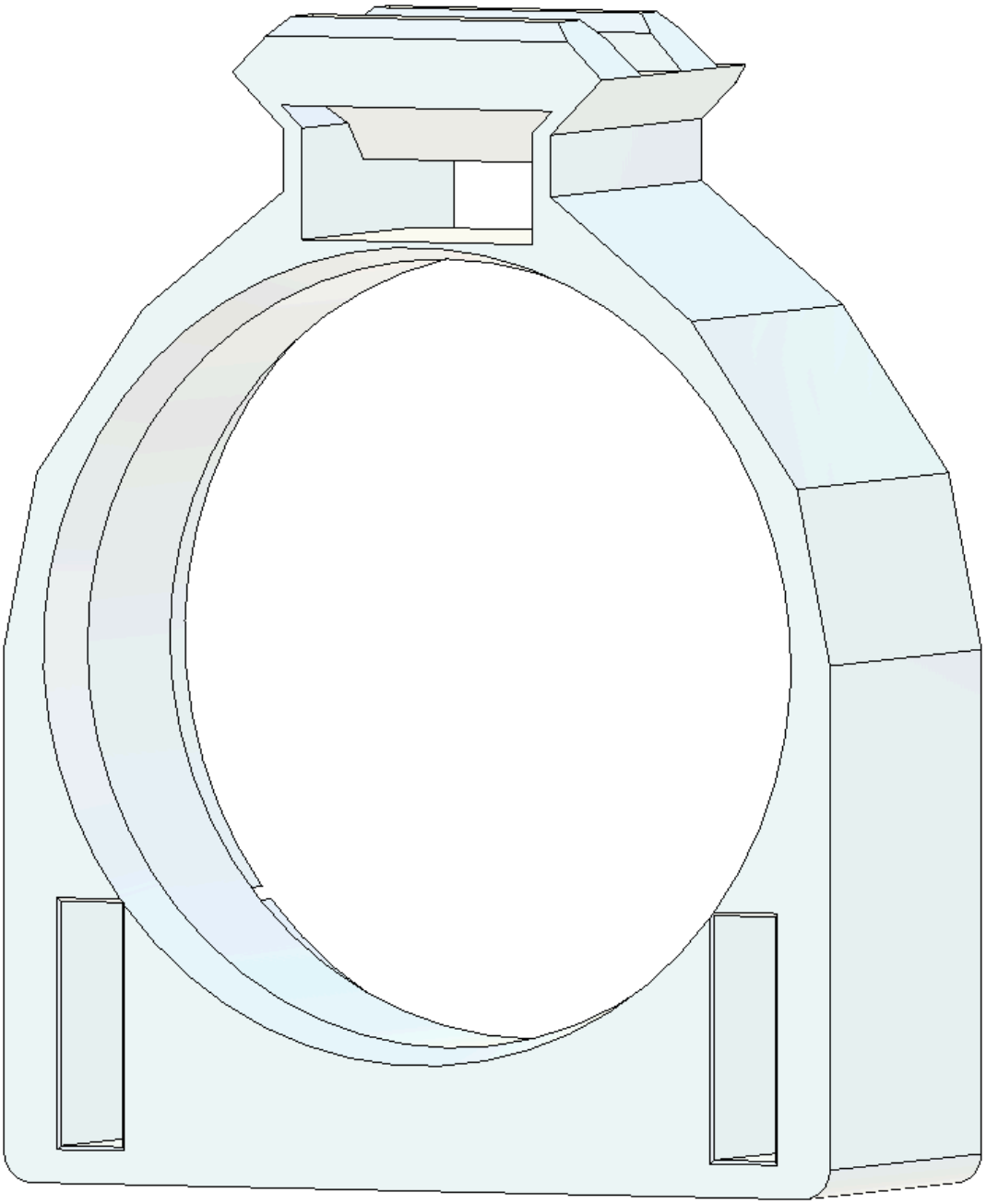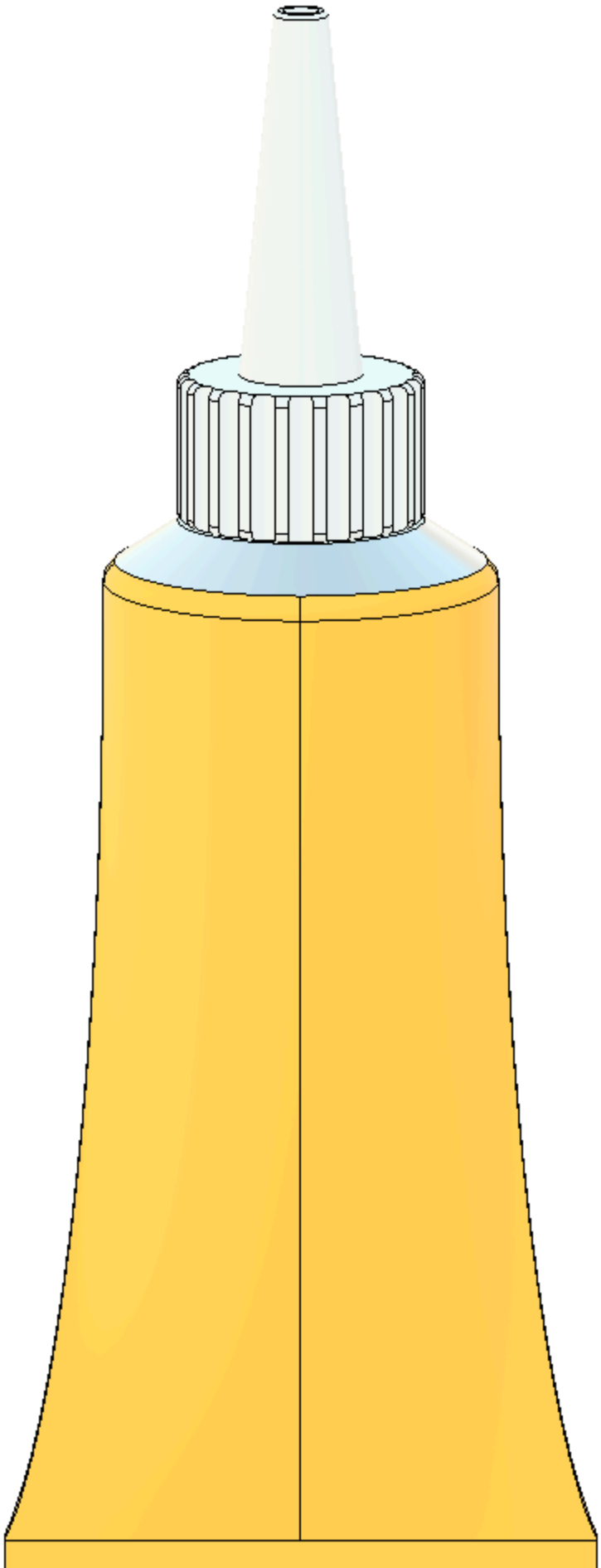
Apply some superglue to the angled face and top of the TubeHolderInsert, then insert it into the front side of the TubeHolder. Make sure the PlungerTube fits into the back of the TubeHolder. Remove the PlungerTube and set aside.