MID_RX MID_RX
MID_TX MID_TX

MIDI connectors

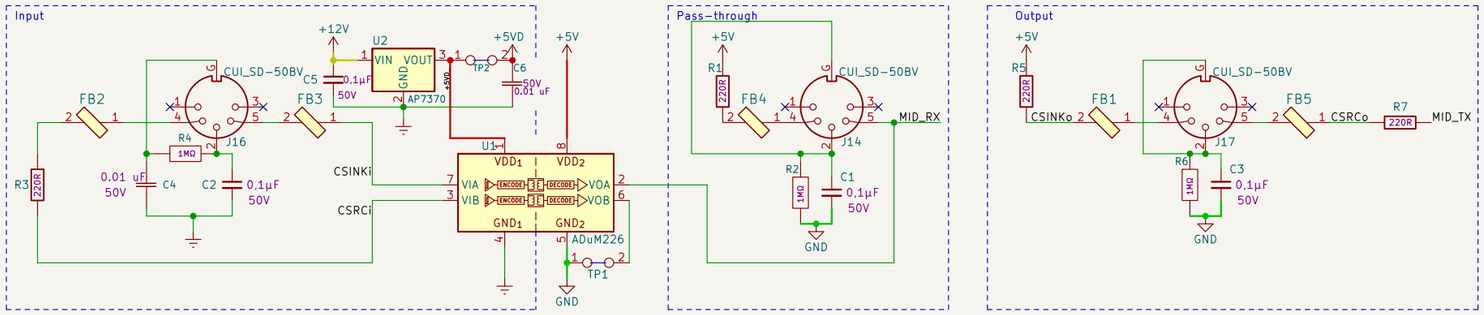

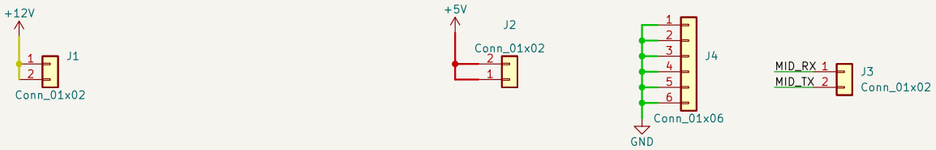

Power-nets

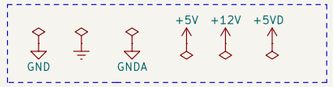

MSX-Midi:
http://map.grauw.nl/resources/midi/msx-midi.php

Alternative to Optocouplers (because of arsenic):
https://modwiggler.com/forum/viewtopic.php?t=177702

Texas
ISO1211DR

ULTRA-MSX

Size A3	Date	Id: 1/1	File Ultra-Midi.kicad_sch
KiCad E.D.A. eeschema (6.0.5)			

Rev

License