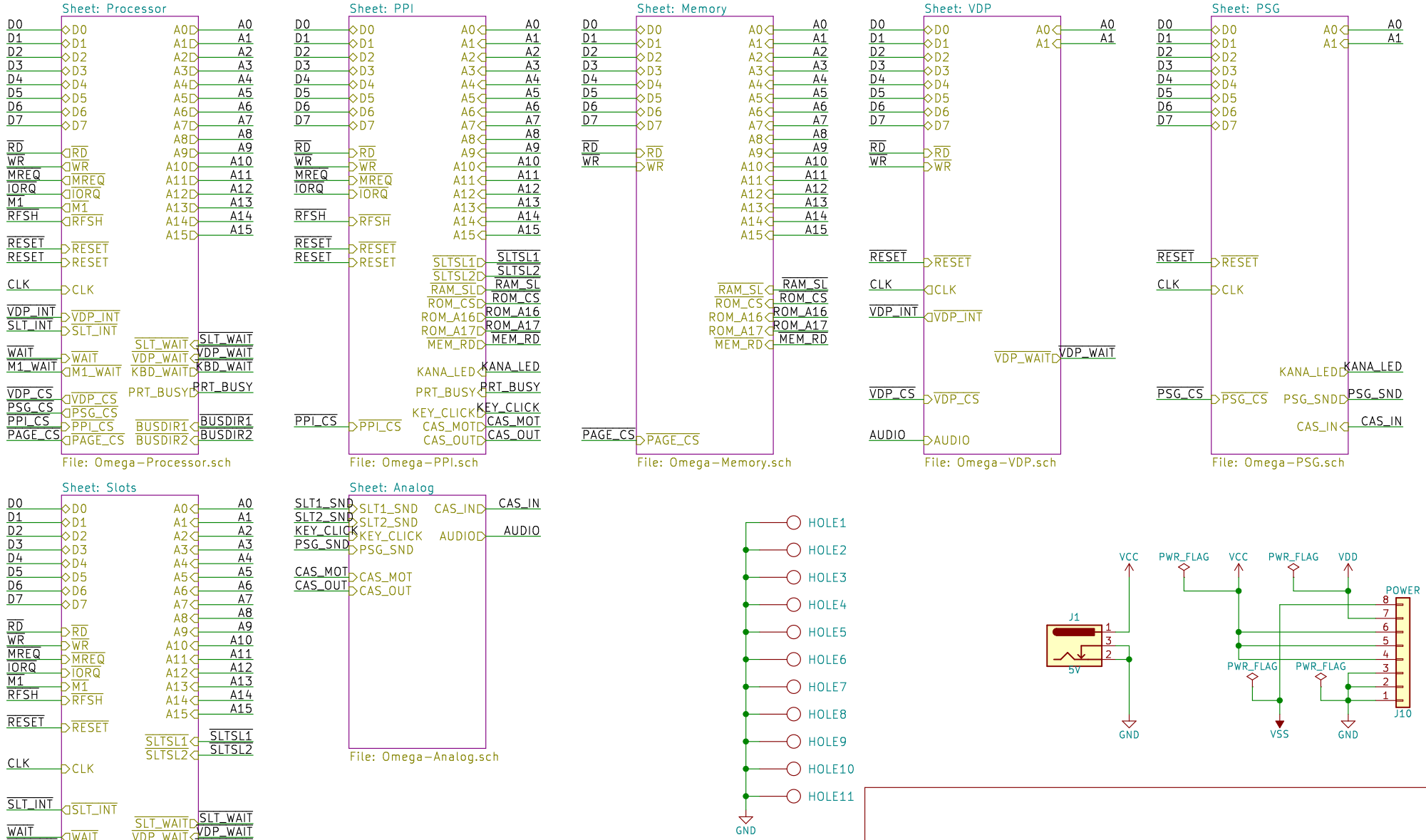

Sheet: /
File: Omega-Mainboard.sch

Title:

Size: A4	Date:	Rev:
KiCad E.D.A. kicad (5.1.8)-1		Id: 1/8

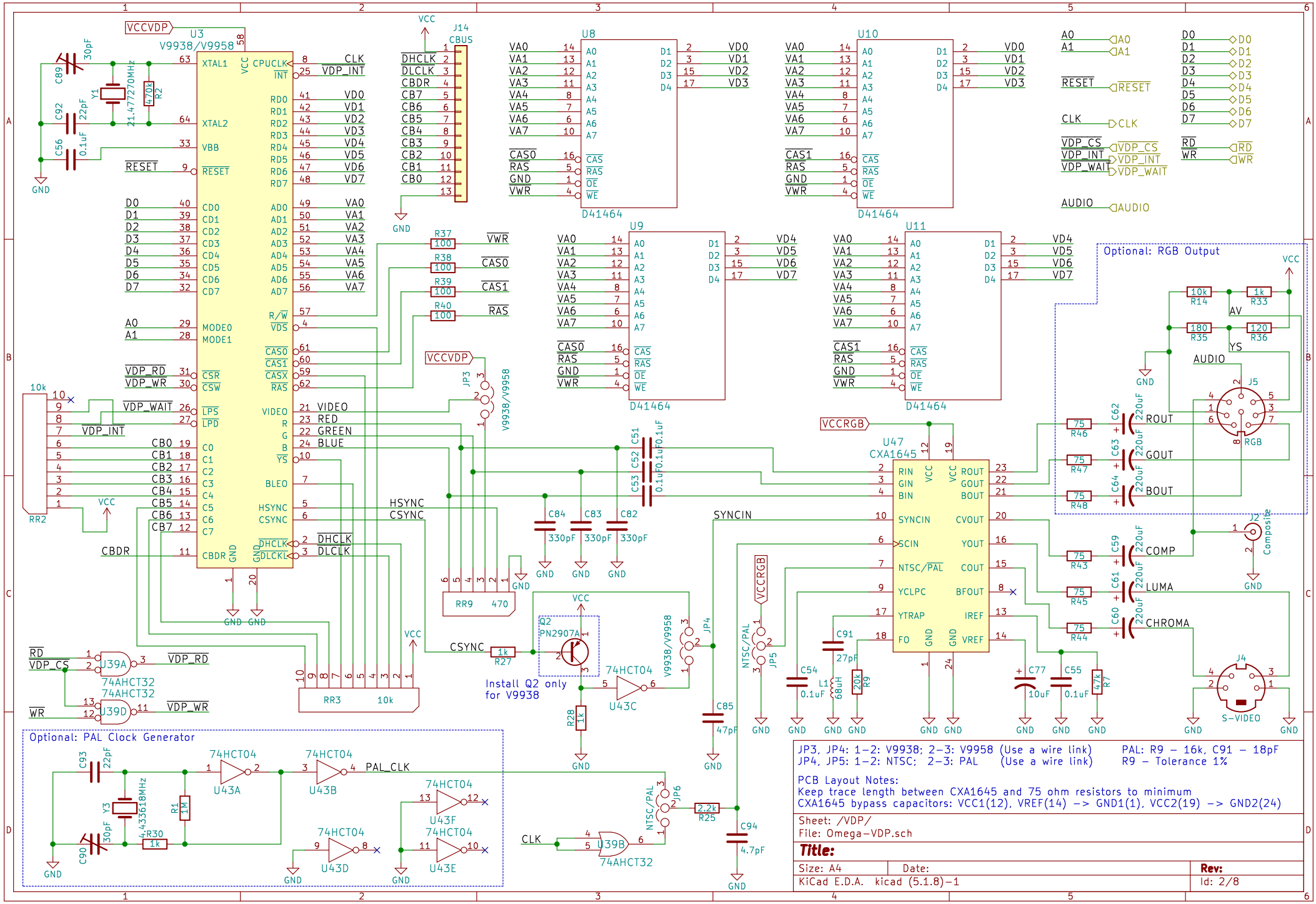
U3
V9938/V9958
VCCVDP
XTAL1
XTAL2
VBB
RESET
CPUCLK
INT
RD0
RD1
RD2
RD3
RD4
RD5
RD6
RD7
CD0
CD1
CD2
CD3
CD4
CD5
CD6
CD7
AD0
AD1
AD2
AD3
AD4
AD5
AD6
AD7
MODE0
MODE1
CSR
CSW
LPS
LPD
CAS0
CAS1
CASX
RAS
R/W
VDS
VIDEO
R
G
B
YS
BLEO
HSYNC
CSYNC
DHCLK
DLCLK
C0
C1
C2
C3
C4
C5
C6
C7
CBDR
GND
VCC
CLK
VDP_INT
VDD
VAA
D0
D1
D2
D3
D4
D5
D6
D7
A0
A1
VDP_RD
VDP_WR
VDP_WAIT
CB0
CB1
CB2
CB3
CB4
CB5
CB6
CB7
RR2
10k
C89
30pF
C92
22pF
C56
0.1uF
Y1
21.477270MHz
R2
470k
J14
CBUS
DHCLK
DLCLK
CBDR
CB7
CB6
CB5
CB4
CB3
CB2
CB1
CB0
U8
U9
U10
U11
D41464
VA0
VA1
VA2
VA3
VA4
VA5
VA6
VA7
VD0
VD1
VD2
VD3
VD4
VD5
VD6
VD7
CAS0
CAS1
RAS
GND
VWR
R37
R38
R39
R40
100
JP3
V9938/V9958
RR9
470
RR3
10k
U39A
U39D
74AHCT32
RD
WR
VDP_RD
VDP_WR
VDP_CS
Q2
PN2907A
Install Q2 only
for V9938
R27
1k
R28
1k
74HCT04
U43C
JP4
C84
C83
C82
330pF
C51
C52
C53
0.1uF
HSYNC
CSYNC
SYNCIN
C85
47pF
U47
CXA1645
RIN
GIN
BIN
SYNCIN
SCIN
NTSC/PAL
YCLPC
YTRAP
FO
ROUT
GOUT
BOUT
CVOUT
YOUT
COUT
BFOUT
IREF
VREF
VCCRGB
JP5
C54
0.1uF
L1
68uH
C91
27pF
R9
20k
C77
10uF
C55
0.1uF
R7
47k
R46
R47
R48
R43
R45
R44
75
C62
C63
C64
C59
C61
C60
220uF
ROUT
GOUT
BOUT
COMP
LUMA
CHROMA
Optional: RGB Output
R14
10k
R33
1k
R35
180
R36
120
AV
YS
AUDIO
J5
RGB
J2
Composite
J4
S-VIDEO
Optional: PAL Clock Generator
C93
22pF
C90
30pF
Y3
4.433618MHz
R1
1M
R30
1k
74HCT04
U43A
U43B
U43D
U43E
U43F
PAL_CLK
JP6
R25
2.2k
C94
4.7pF
U39B
74AHCT32
JP3, JP4: 1–2: V9938; 2–3: V9958 (Use a wire link)
JP4, JP5: 1–2: NTSC; 2–3: PAL (Use a wire link)
PAL: R9 – 16k, C91 – 18pF
R9 – Tolerance 1%
PCB Layout Notes:
Keep trace length between CXA1645 and 75 ohm resistors to minimum
CXA1645 bypass capacitors: VCC1(12), VREF(14) -> GND1(1), VCC2(19) -> GND2(24)
Sheet: /VDP/
File: Omega-VDP.sch
Title:
Size: A4
Date:
Rev:
KiCad E.D.A. kicad (5.1.8)-1
Id: 2/8

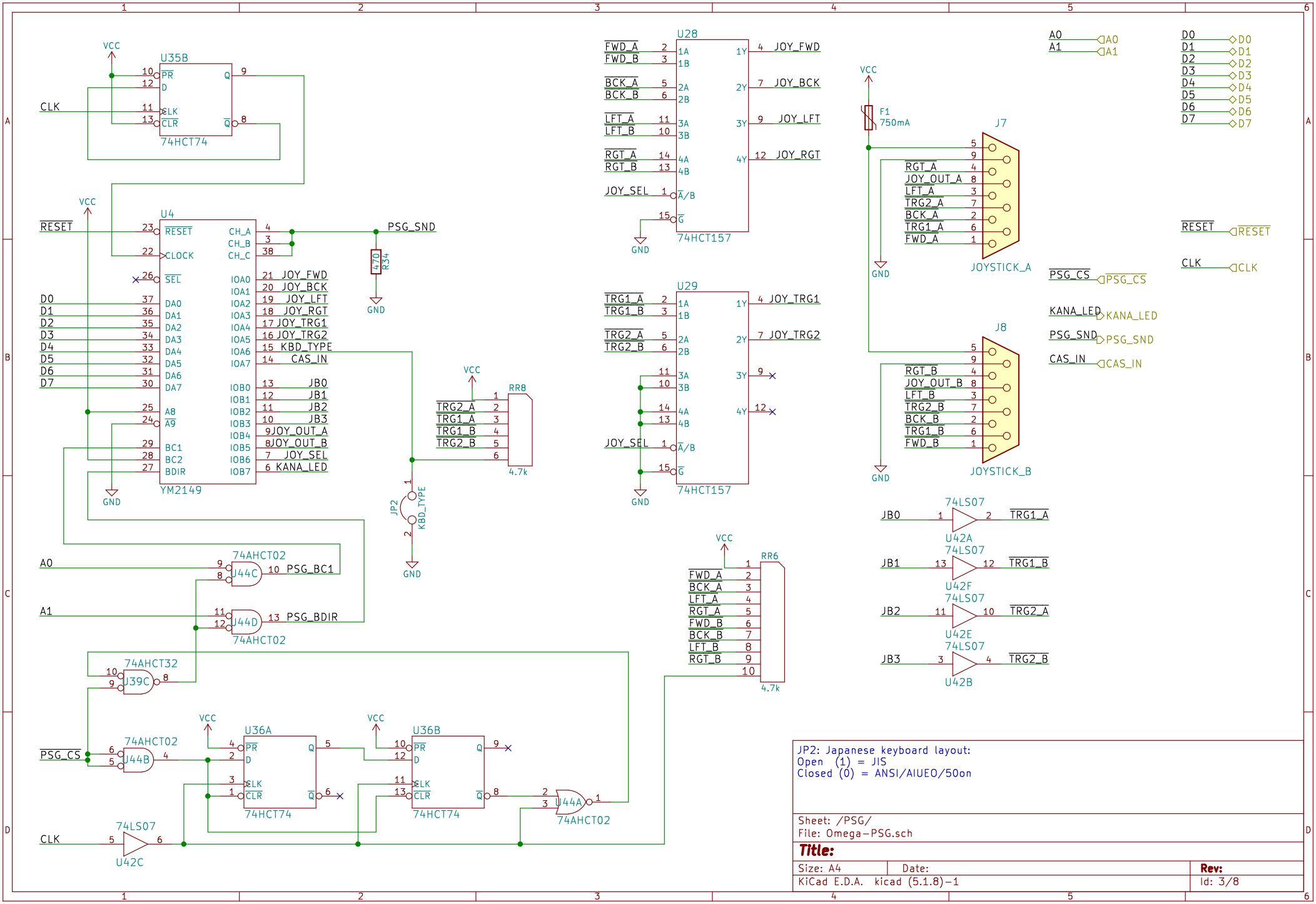
U35B
74HCT74
U4
YM2149
U28
74HCT157
U29
74HCT157
F1
750mA
J7
JOYSTICK_A
J8
JOYSTICK_B
RR8
4.7k
RR6
4.7k
JP2
KBD_TYPE
74AHCT02
U44C
U44D
74AHCT32
U39C
U36A
U36B
U44A
U44B
74LS07
U42A
U42F
U42E
U42B
U42C
PSG_SND
470
R34
VCC
GND
CLK
RESET
D0
D1
D2
D3
D4
D5
D6
D7
A0
A1
JOY_FWD
JOY_BCK
JOY_LFT
JOY_RGT
JOY_TRG1
JOY_TRG2
KBD_TYPE
CAS_IN
JB0
JB1
JB2
JB3
JOY_OUT_A
JOY_OUT_B
JOY_SEL
KANA_LED
PSG_BC1
PSG_BDIR
PSG_CS
JP2: Japanese keyboard layout:
Open (1) = JIS
Closed (0) = ANSI/AIUEO/50on
Sheet: /PSG/
File: Omega-PSG.sch
Title:
Size: A4
Date:
Rev:
KiCad E.D.A. kicad (5.1.8)-1
Id: 3/8

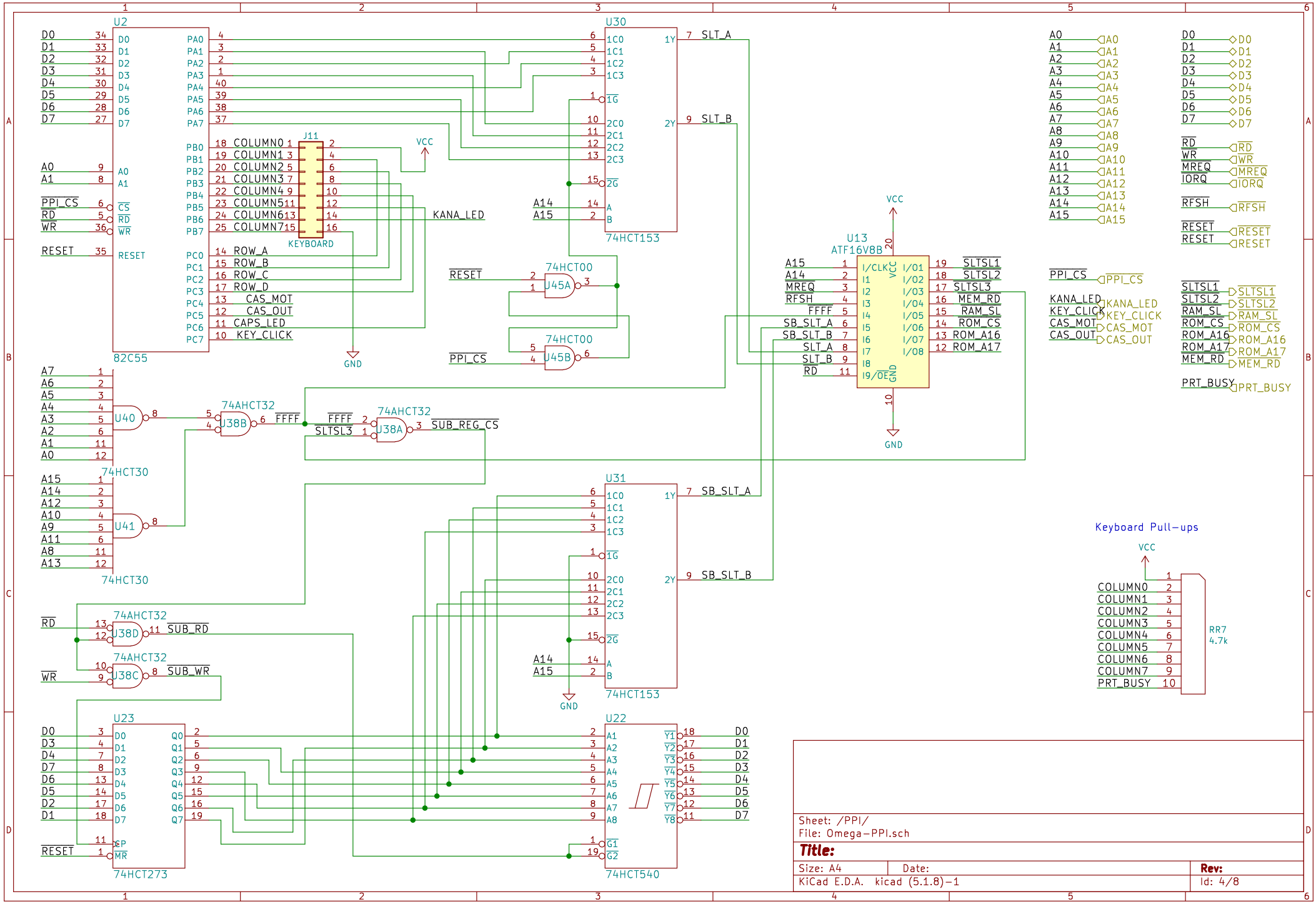
U2
82C55
U30
74HCT153
U13
ATF16V8B
J11
KEYBOARD
74HCT00
U45A
U45B
74HCT30
U40
U41
74AHCT32
U38A
U38B
U38C
U38D
U31
74HCT153
U23
74HCT273
U22
74HCT540
Keyboard Pull-ups
RR7
4.7k
VCC
GND
KANA_LED
SLT_A
SLT_B
SB_SLT_A
SB_SLT_B
SUB_REG_CS
SUB_RD
SUB_WR
Sheet: /PPI/
File: Omega-PPI.sch
Title:
Size: A4
Date:
Rev:
KiCad E.D.A. kicad (5.1.8)-1
Id: 4/8

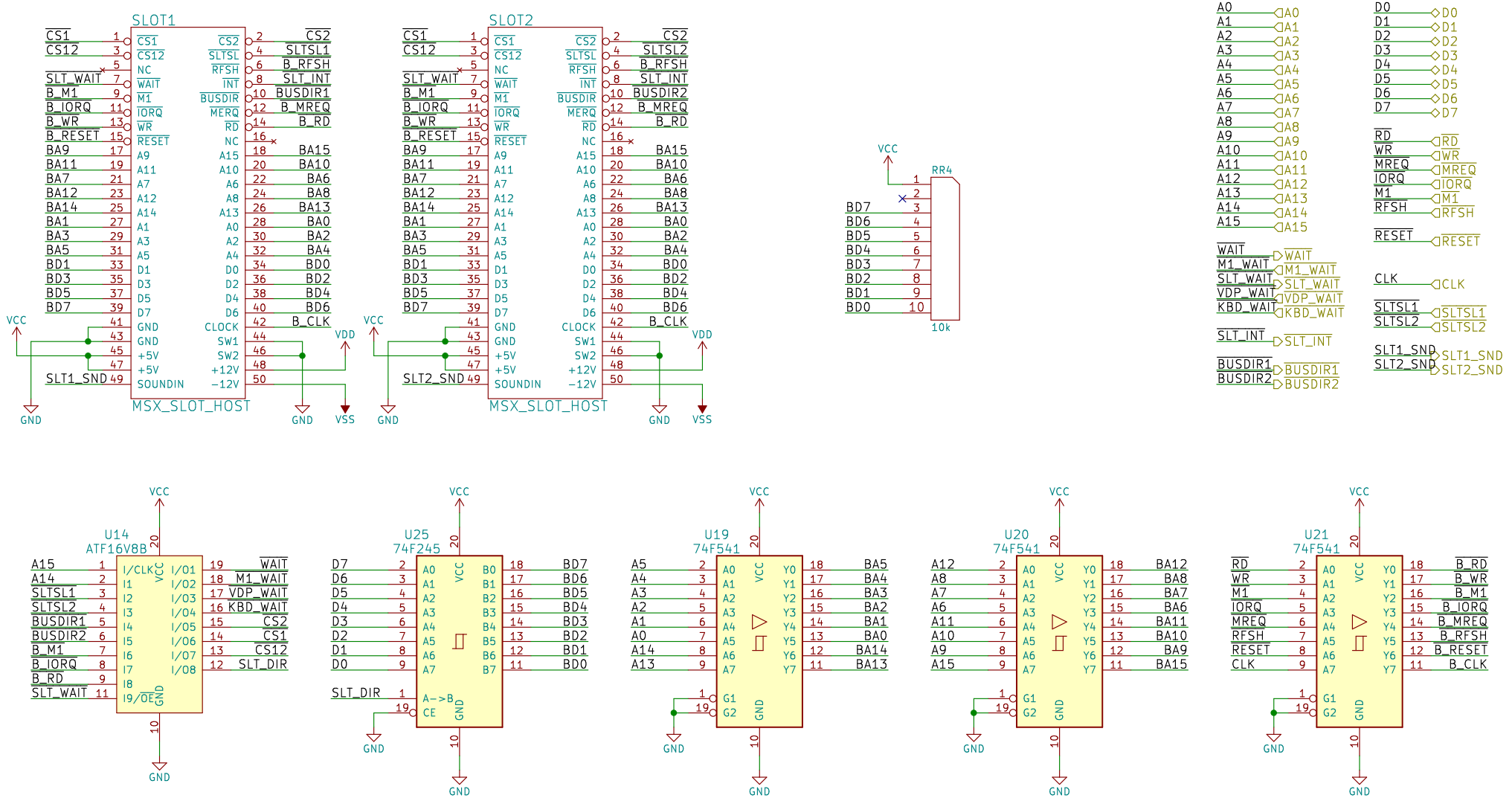

Sheet: /Slots/
File: Omega-Slots.sch

Title:

Size: A4	Date:	Rev:
KiCad E.D.A. kicad (5.1.8)-1		Id: 5/8

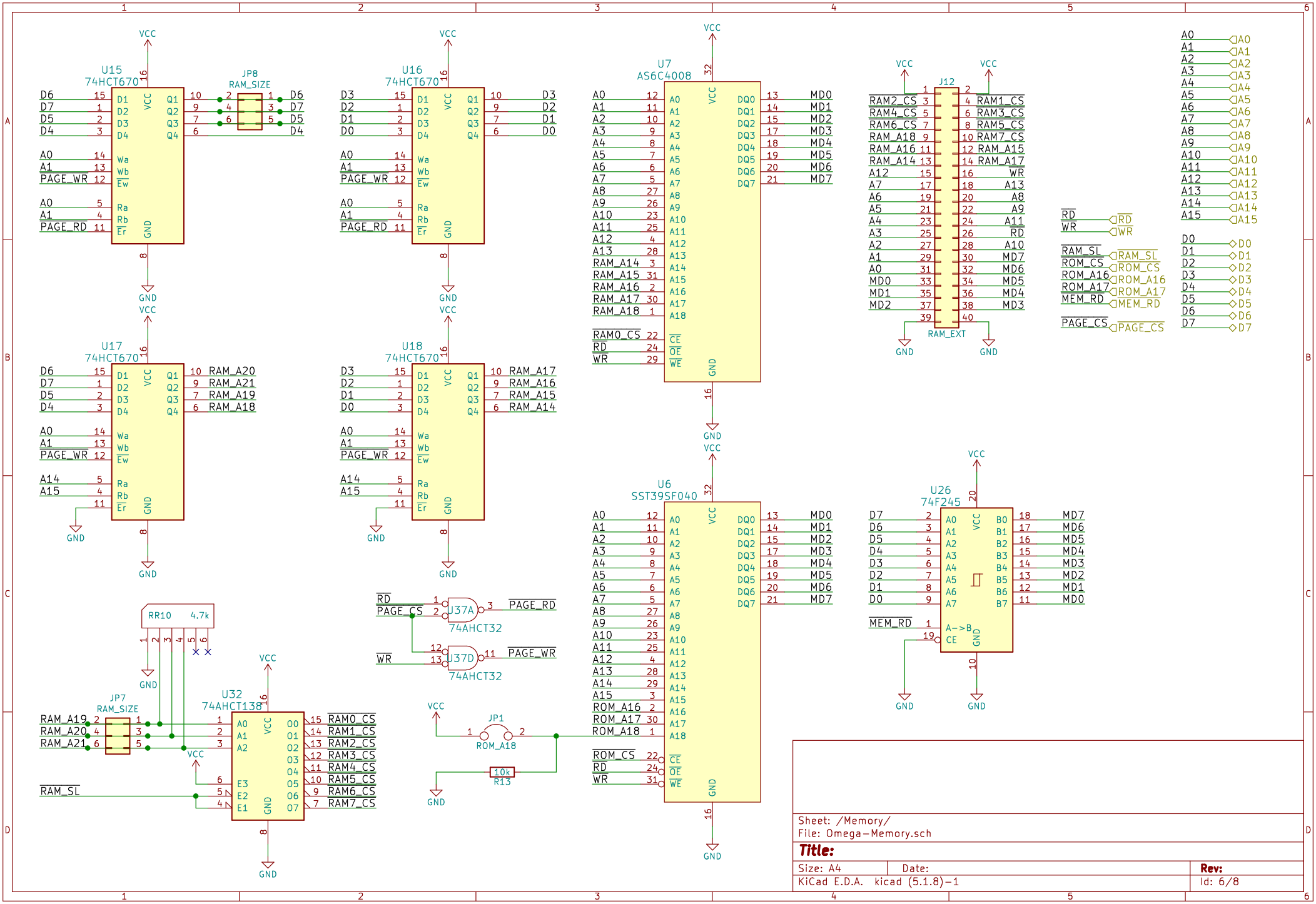
U15
74HCT670
U16
74HCT670
U17
74HCT670
U18
74HCT670
JP8
RAM_SIZE
JP7
RAM_SIZE
U32
74AHCT138
RR10 4.7k
U37A
74AHCT32
U37D
74AHCT32
JP1
ROM_A18
R13
10k
U7
AS6C4008
U6
SST39SF040
J12
RAM_EXT
U26
74F245
VCC
GND
RAM_SL
PAGE_RD
PAGE_WR
PAGE_CS
RAM0_CS
RAM1_CS
RAM2_CS
RAM3_CS
RAM4_CS
RAM5_CS
RAM6_CS
RAM7_CS
ROM_CS
ROM_A16
ROM_A17
MEM_RD
RD
WR
Sheet: /Memory/
File: Omega-Memory.sch
Title:
Size: A4
Date:
Rev:
KiCad E.D.A. kicad (5.1.8)-1
Id: 6/8

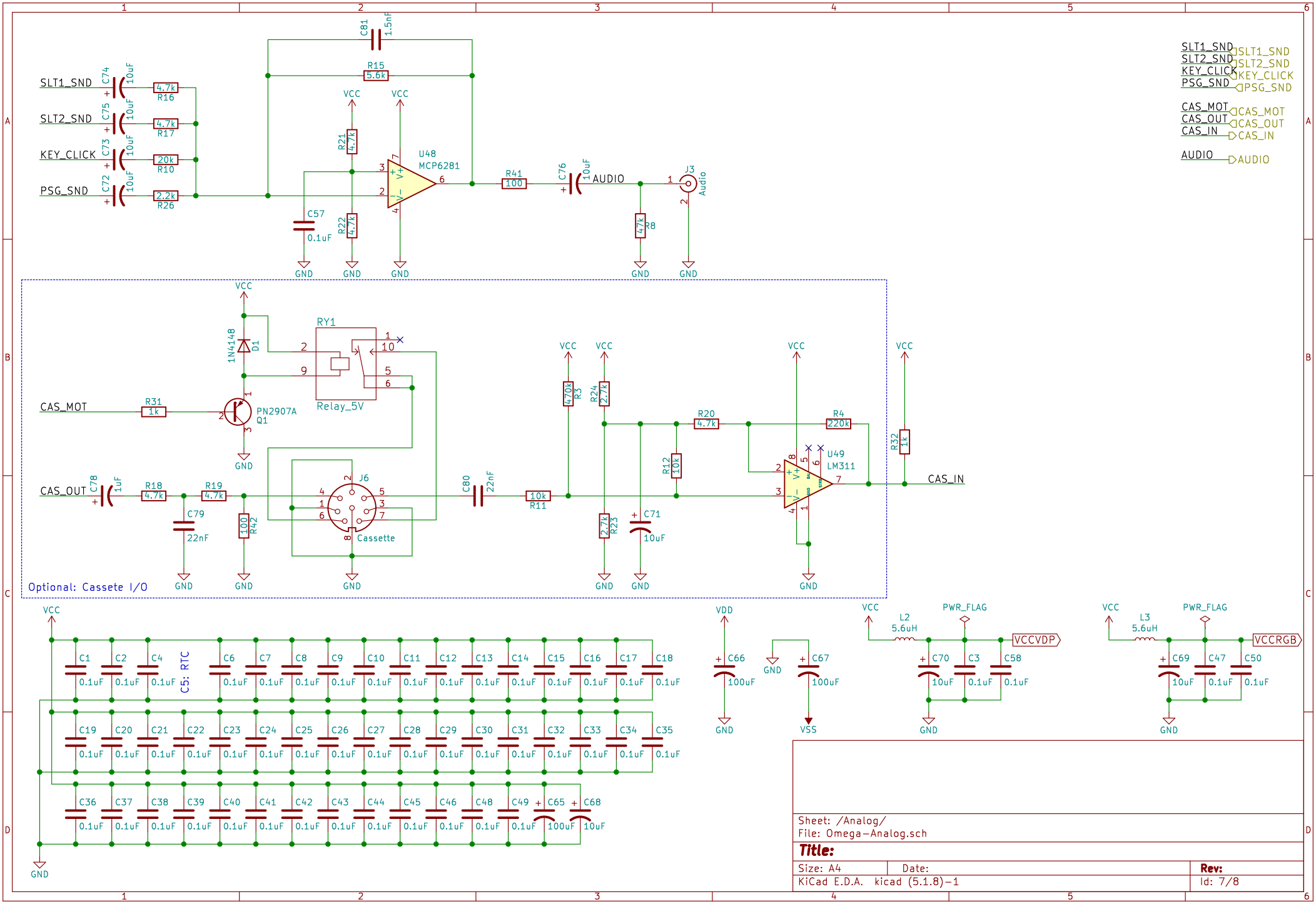

Sheet: /Analog/
File: Omega-Analog.sch

Title:

Size: A4	Date:	Rev:
KiCad E.D.A. kicad (5.1.8)-1		Id: 7/8

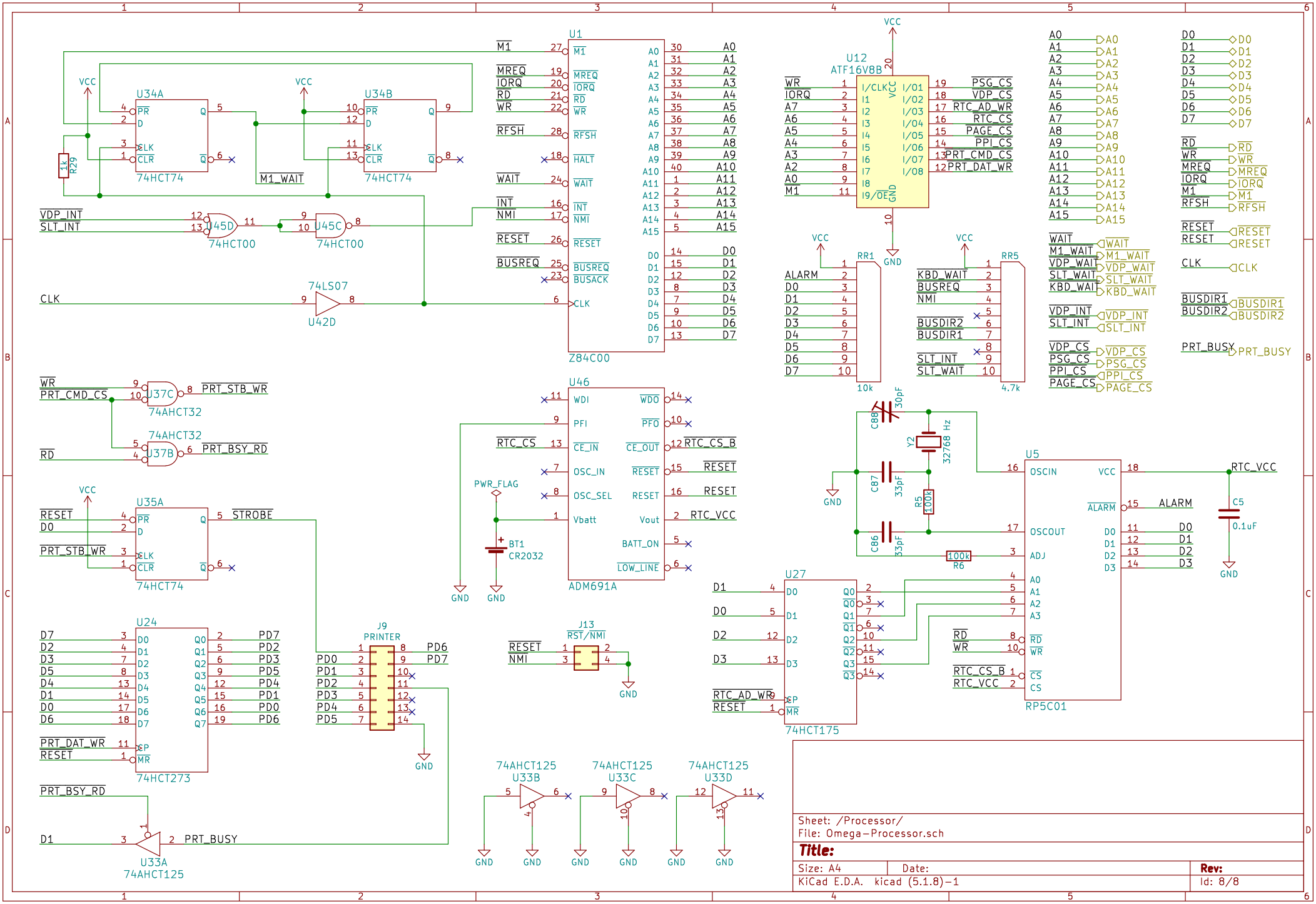
U1
Z84C00
U12
ATF16V8B
U34A
U34B
74HCT74
U45D
U45C
74HCT00
74LS07
U42D
U37C
U37B
74AHCT32
U35A
U24
74HCT273
U46
ADM691A
U5
RP5C01
U27
74HCT175
J9
PRINTER
J13
RST/NMI
RR1
10k
RR5
4.7k
BT1
CR2032
Y2
32768 Hz
U33A
U33B
U33C
U33D
74AHCT125
VCC
GND
M1
MREQ
IORQ
RD
WR
RFSH
HALT
WAIT
INT
NMI
RESET
BUSREQ
BUSACK
CLK
A0
A1
A2
A3
A4
A5
A6
A7
A8
A9
A10
A11
A12
A13
A14
A15
D0
D1
D2
D3
D4
D5
D6
D7
PSG_CS
VDP_CS
RTC_AD_WR
RTC_CS
PAGE_CS
PPI_CS
PRT_CMD_CS
PRT_DAT_WR
ALARM
KBD_WAIT
BUSDIR2
BUSDIR1
SLT_INT
SLT_WAIT
M1_WAIT
VDP_WAIT
VDP_INT
PRT_BUSY
PRT_STB_WR
PRT_BSY_RD
STROBE
RTC_CS
RTC_CS_B
RTC_VCC
WDI
WDO
PFI
PFO
CE_IN
CE_OUT
OSC_IN
OSC_SEL
Vbatt
Vout
BATT_ON
LOW_LINE
PWR_FLAG
OSCIN
OSCOUT
ADJ
CS
C88
30pF
C87
33pF
C86
R5
100k
R6
C5
0.1uF
PD0
PD1
PD2
PD3
PD4
PD5
PD6
PD7
Sheet: /Processor/
File: Omega-Processor.sch
Title:
Size: A4
Date:
Rev:
KiCad E.D.A. kicad (5.1.8)-1
Id: 8/8