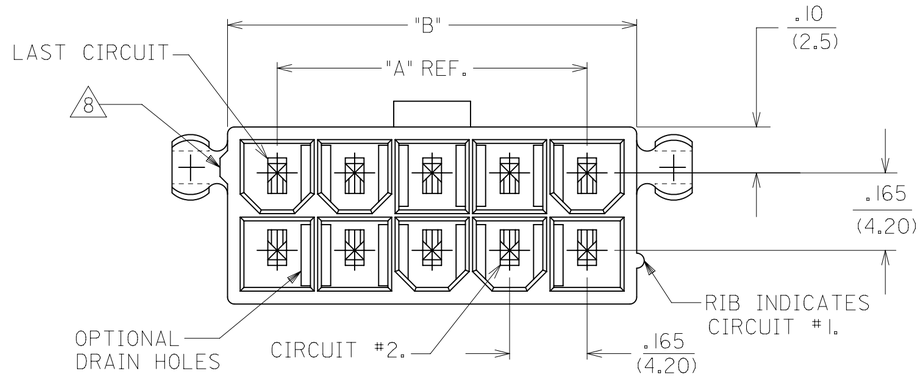

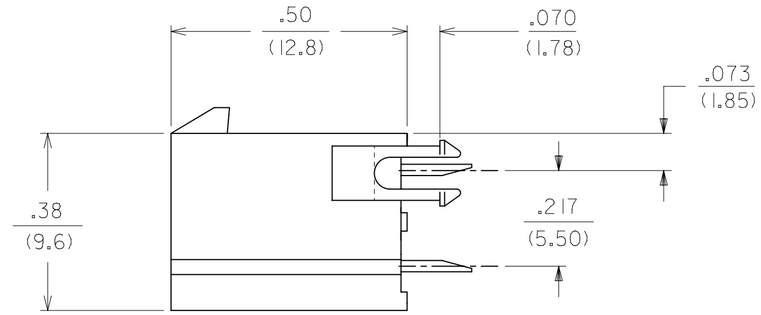

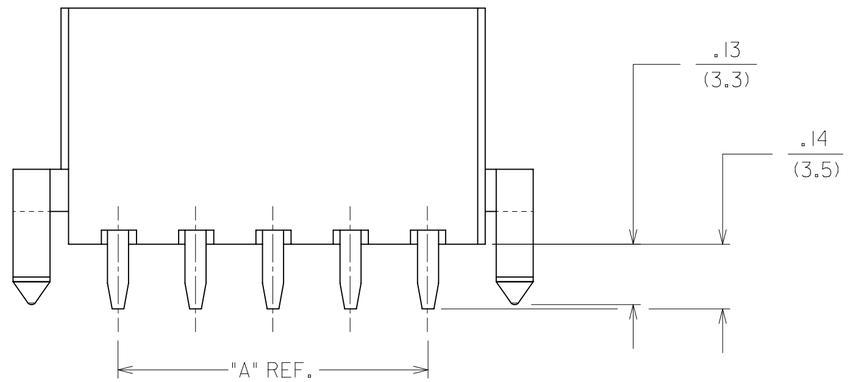

CIRCUIT SIZE	DIM. "A"	DIM. "B"	DIM. "C"
2	—	.21 (5.4)	.370 (9.40)
4	.17 (4.2)	.38 (9.6)	.535 (13.60)
6	.33 (8.4)	.54 (13.8)	.701 (17.80)
8	.50 (12.6)	.71 (18.0)	.866 (22.00)
10	.66 (16.8)	.87 (22.2)	1.031 (26.20)
12	.83 (21.0)	1.04 (26.4)	1.197 (30.40)
14	.99 (25.2)	1.20 (30.6)	1.362 (34.60)
16	1.16 (29.4)	1.37 (34.8)	1.528 (38.80)
18	1.32 (33.6)	1.54 (39.0)	1.693 (43.00)
20	1.49 (37.8)	1.70 (43.2)	1.858 (47.20)
22	1.65 (42.0)	1.87 (47.4)	2.024 (51.40)
24	1.82 (46.2)	2.03 (51.6)	2.189 (55.60)

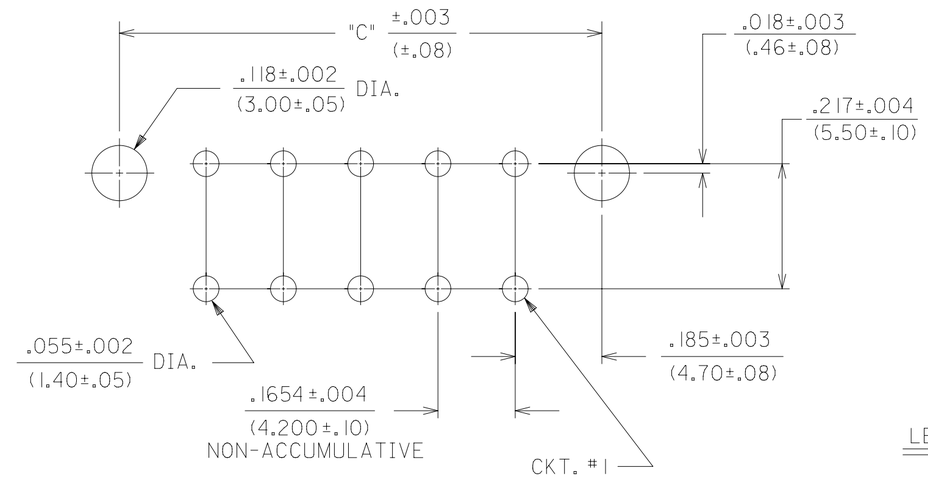

RECOMMENDED HOLE LAYOUT FOR .070/(1.78) MAX. THICK P.C. BOARD

VIEWED FROM COMPONENT SIDE

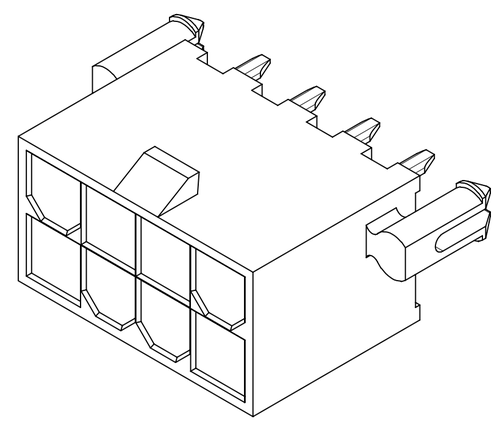

8 CKT SHOWN

NOTES:

1) HOUSING MATERIAL:
   "BLANK" - NYLON, UNFILLED U.L. 94V-2, COLOR: NATURAL.
   210 - NYLON, UNFILLED U.L. 94V-0, COLOR: NATURAL.
   BL - NYLON, UNFILLED U.L. 94V-2, COLOR: BLACK.
   400 - NYLON, UNFILLED U.L. 94V-0, COLOR: BLACK.
   TERMINAL MATERIAL: BRASS
2) TERMINAL PLATING:
   "BLANK" - .000035/(.00090) MIN. REFLOWED MATTE TIN OVER .000020/(.00050) MIN. COPPER. (PREPLATE) (FINISH IS BRIGHT IN APPEARANCE, THICKNESS AS APPLIED PRIOR TO REFLOW)
   GS - .000030/(.00076) MIN. SELECT GOLD .000100/(.00254) MIN. SELECT MATTE TIN OVER .000050/(.00127) MIN. NICKEL OVERALL.
   GS2 - .000015/(.00038) MIN. SELECT GOLD AND .000100/(.00254) MIN. SELECT MATTE TIN OVER .000050/(.00127) MIN. NICKEL OVERALL.
   S - .000100/(.00254) MIN. BRIGHT TIN OVER .000050/(.00127) MIN. NICKEL OVERALL.
   MS - .000100/(.00254) MIN. MATTE TIN OVER .000050/(.00127) MIN. NICKEL OVERALL.
3) PRODUCT SPECIFICATION: PS-5556-001
4) PACKAGING: SEE CHARTS
5) PART MATES WITH MINI-FIT JR. RECEPTACLE #5557.
6) MOUNTING OPTIONS:
   "BLANK" - NO MOUNTING
   (SEE SD-5566-002 DWG.)
   2 - PEG MOUNT
7) PART CONFORMS TO CLASS "B" REQUIREMENTS OF COSMETIC SPECIFICATION PS-45499-002
8) ANTI-SHINGLING RIB MAY OR MAY NOT APPEAR ON HOUSINGS.
9) CONNECTORS ARE NOT TO BE MATED OR UNMATED WHILE CIRCUITS ARE LIVE.
10) PARTS ARE NOT DESIGNED FOR CURRENT SHARING.

LEGEND:

5566 - N * * * - * *

- BASE NUMBER
- CIRCUIT SIZE
- ASSEMBLY TYPE
  A - W/O DRAIN HOLES
  B - WITH DRAIN HOLES
- MOUNTING OPTION (SEE NOTE 6.)
- PLATING (SEE NOTE 2.)
- HOUSING MAT'L. (SEE NOTE 1.)
- PACKAGING
  BLANK = TRAY
  TR = TAPE &REEL

THIS DRAWING REPLACES SDA-5566-N*2*-*

DOCUMENT STATUS	P1	RELEASE DATE	2020/12/14 16:13:38

SYMBOLS: EA = 0; EF = 0; EP = 0; S = 0; ▼ = 0; C = 0; ☒ = 0; ■ = 0; C = 0

THIS DRAWING CONTAINS INFORMATION THAT IS PROPRIETARY TO MOLEX ELECTRONIC TECHNOLOGIES, LLC AND SHOULD NOT BE USED WITHOUT WRITTEN PERMISSION

DIMENSION UNITS	SCALE
IN/MM	4:1

GENERAL TOLERANCES (UNLESS SPECIFIED)

	MM	INCH
4 PLACES	±	±
3 PLACES	±	± 0.015
2 PLACES	± 0.38	± 0.02
1 PLACE	± 0.5	±
0 PLACES	±	±
ANGULAR TOL	± 0.5 °	

DRAFT WHERE APPLICABLE MUST REMAIN WITHIN DIMENSIONS

CURRENT REV DESC:

EC NO: 650997
DRWN: HPAN18 2020/10/23
CHK'D: YXZHENG 2020/12/14
APPR: YXZHENG 2020/12/14

INITIAL REVISION:
DRWN: RJF 1987/08/19
APPR: FSMITH 2012/01/10

THIRD ANGLE PROJECTION | DRAWING: C-SIZE | SERIES: 5566

molex

MINIFIT JR VERT HDR ASSY'S W/ PEGS

PRODUCT CUSTOMER DRAWING

DOCUMENT NUMBER	DOC TYPE	DOC PART	REVISION
55660021-SD	PSD	000	A1

MATERIAL NUMBER	CUSTOMER	SHEET NUMBER
SEE TABLE	GENERAL MARKET	1 OF 4

FORMAT: Eng-lega-master-tb-prod-C
REVISION: D
DATE: 2018/01/18

PLATING:	35 M.I. TIN	PLATING:	35 M.I. TIN
DRAIN HOLES:	WITHOUT DRAIN HOLES	DRAIN HOLES:	WITHOUT DRAIN HOLES
MTG. OPTION:	WITH PEGS	MTG. OPTION:	WITH PEGS
HOUSING MAT'L:	NYLON 6/6 94V-2 NATURAL	HOUSING MAT'L:	NYLON 6/6 94V-0 NATURAL
PACKAGING:	PK-5566-001	PACKAGING:	PK-5566-001

PART NO.	ENG NO.	CKTS		PART NO.	ENG NO.	CKTS	
39-29-9243	5566 -24A2	24		39-29-9247	5566 -24A2-210	24	
	-				-		
	-				-		

PLATING:	30 M.I. GOLD	PLATING:	30 M.I. GOLD
DRAIN HOLES:	WITHOUT DRAIN HOLES	DRAIN HOLES:	WITHOUT DRAIN HOLES
MTG. OPTION:	WITH PEGS	MTG. OPTION:	WITH PEGS
HOUSING MAT'L:	NYLON 6/6 94V-2 NATURAL	HOUSING MAT'L:	NYLON 6/6 94V-0 NATURAL
PACKAGING:	PK-5566-001	PACKAGING:	PK-5566-001

PART NO.	ENG NO.	CKTS		PART NO.	ENG NO.	CKTS	
39-29-9245	5566 -24A2GS	24		39-29-9249	5566 -24A2GS-210	24	
	-				-		
	-				-		

PLATING:	35 M.I. TIN	PLATING:	35 M.I. TIN
DRAIN HOLES:	WITH DRAIN HOLES	DRAIN HOLES:	WITH DRAIN HOLES
MTG. OPTION:	WITH PEGS	MTG. OPTION:	WITH PEGS
HOUSING MAT'L:	NYLON 6/6 94V-2 NATURAL	HOUSING MAT'L:	NYLON 6/6 94V-0 NATURAL
PACKAGING:	PK-5566-001	PACKAGING:	PK-5566-001

PART NO.	ENG NO.	CKTS		PART NO.	ENG NO.	CKTS	
39-29-9242	5566 -24B2	24		39-29-9246	5566 -24B2-210	24	
	-				-		
	-				-		

PLATING:	30 M.I. GOLD	PLATING:	30 M.I. GOLD
DRAIN HOLES:	WITH DRAIN HOLES	DRAIN HOLES:	WITH DRAIN HOLES
MTG. OPTION:	WITH PEGS	MTG. OPTION:	WITH PEGS
HOUSING MAT'L:	NYLON 6/6 94V-2 NATURAL	HOUSING MAT'L:	NYLON 6/6 94V-0 NATURAL
PACKAGING:	PK-5566-001	PACKAGING:	PK-5566-001

PART NO.	ENG NO.	CKTS		PART NO.	ENG NO.	CKTS	
39-29-9244	5566 -24B2GS	24		39-28-9248	5566 -24B2GS-210	24	
	-				-		
	-				-		

SYMBOLS	
F/A	= 0
F/C	= 0
F/D	= 0
S	= 0
	= 0
C	= 0
	= 0
	= 0
G	= 0

THIS DRAWING CONTAINS INFORMATION THAT IS PROPRIETARY TO MOLEX ELECTRONIC TECHNOLOGIES, LLC AND SHOULD NOT BE USED WITHOUT WRITTEN PERMISSION

DIMENSION UNITS: IN/MM
SCALE: 1:1

GENERAL TOLERANCES (UNLESS SPECIFIED)

	MM	INCH
4 PLACES	±	±
3 PLACES	±	± 0.015
2 PLACES	± 0.38	± 0.02
1 PLACE	± 0.5	±
0 PLACES	±	±
ANGULAR TOL	± 0.5 °	

DRAFT WHERE APPLICABLE MUST REMAIN WITHIN DIMENSIONS

CURRENT REV DESC:

EC NO: 650997
DRWN: HPAN18 2020/10/23
CHK'D: YXZHENG 2020/12/14
APPR: YXZHENG 2020/12/14

INITIAL REVISION:
DRWN: RJF 1987/08/19
APPR: FSMITH 2012/01/10

THIRD ANGLE PROJECTION | DRAWING: C-SIZE | SERIES: 5566

molex

MINIFIT JR VERT HDR ASSY'S W/ PEGS

PRODUCT CUSTOMER DRAWING

DOCUMENT NUMBER	DOC TYPE	DOC PART	REVISION
55660021-SD	PSD	000	A1

MATERIAL NUMBER	CUSTOMER	SHEET NUMBER
SEE TABLE	GENERAL MARKET	2 OF 4

DOCUMENT STATUS	P1	RELEASE DATE	2020/12/14 16:13:38

FORMAT: Eng-tega-master-tb-prod-C
REVISION: D
DATE: 2018/01/18

PLATING:	100 M.I. BRIGHT TIN	PLATING:	100 M.I. BRIGHT TIN
DRAIN HOLES:	WITHOUT DRAIN HOLES	DRAIN HOLES:	WITHOUT DRAIN HOLES
MTG. OPTION:	WITH PEGS	MTG. OPTION:	WITH PEGS
HOUSING MAT'L:	NYLON 6/6 94V-2 NATURAL	HOUSING MAT'L:	NYLON 6/6 94V-0 NATURAL
PACKAGING:	PK-5566-001	PACKAGING:	PK-5566-001

PART NO.	ENG NO.	CKTS		PART NO.	ENG NO.	CKTS	
39-30-6245	5566 -24A2S	24		39-30-6246	5566 -24A2S-210	24	
	-				-		
	-				-		

PLATING:	15 M.I. SELECT GOLD	PLATING:	15 M.I. SELECT GOLD
DRAIN HOLES:	WITHOUT DRAIN HOLES	DRAIN HOLES:	WITHOUT DRAIN HOLES
MTG. OPTION:	WITH PEGS	MTG. OPTION:	WITH PEGS
HOUSING MAT'L:	NYLON 6/6 94V-2 NATURAL	HOUSING MAT'L:	NYLON 6/6 94V-0 NATURAL
PACKAGING:	PK-5566-001	PACKAGING:	PK-5566-001

PART NO.	ENG NO.	CKTS		PART NO.	ENG NO.	CKTS	
39-30-0246	5566 -24A2GS2	24		39-30-0247	5566 -24A2GS2-210	24	
	-				-		
	-				-		

PLATING:	100 M.I. BRIGHT TIN	PLATING:	100 M.I. BRIGHT TIN
DRAIN HOLES:	WITH DRAIN HOLES	DRAIN HOLES:	WITH DRAIN HOLES
MTG. OPTION:	WITH PEGS	MTG. OPTION:	WITH PEGS
HOUSING MAT'L:	NYLON 6/6 94V-2 NATURAL	HOUSING MAT'L:	NYLON 6/6 94V-0 NATURAL
PACKAGING:	PK-5566-001	PACKAGING:	PK-5566-001

PART NO.	ENG NO.	CKTS		PART NO.	ENG NO.	CKTS	
39-30-6247	5566 -24B2S	24		39-30-6248	5566 -24B2S-210	24	
	-				-		
	-				-		

PLATING:	100 M.I. MATTE TIN	PLATING:	100 M.I. MATTE TIN
DRAIN HOLES:	WITHOUT DRAIN HOLES	DRAIN HOLES:	WITHOUT DRAIN HOLES
MTG. OPTION:	WITH PEGS	MTG. OPTION	WITH PEGS
HOUSING MAT'L:	NYLON 6/6 94V-2 NATURAL	HOUSING MAT'L:	NYLON 6/6 94V-0 NATURAL
PACKAGING:	PK-5566-001	PACKAGING:	PK-5566-001

PART NO.	ENG NO.	CKTS		PART NO.	ENG NO.	CKTS	
46999-0620	5566-24A2MS	24		50-34-8566	5566-24A2MS-210	24	

SYMBOLS

= 0
= 0
= 0
= 0
= 0
= 0
= 0
= 0
= 0

THIS DRAWING CONTAINS INFORMATION THAT IS PROPRIETARY TO MOLEX ELECTRONIC TECHNOLOGIES, LLC AND SHOULD NOT BE USED WITHOUT WRITTEN PERMISSION

DIMENSION UNITS: IN/MM
SCALE: 1:1

GENERAL TOLERANCES (UNLESS SPECIFIED)

	MM	INCH
4 PLACES	±	±
3 PLACES	±	± 0.015
2 PLACES	± 0.38	± 0.02
1 PLACE	± 0.5	±
0 PLACES	±	±
ANGULAR TOL	± 0.5 °	

DRAFT WHERE APPLICABLE MUST REMAIN WITHIN DIMENSIONS

CURRENT REV DESC:

EC NO: 650997
DRWN: HPAN18 2020/10/23
CHK'D: YXZHENG 2020/12/14
APPR: YXZHENG 2020/12/14

INITIAL REVISION:
DRWN: RJF 1987/08/19
APPR: FSMITH 2012/01/10

THIRD ANGLE PROJECTION | DRAWING: C-SIZE | SERIES: 5566

molex

MINIFIT JR VERT HDR ASSY'S W/ PEGS

PRODUCT CUSTOMER DRAWING

DOCUMENT NUMBER	DOC TYPE	DOC PART	REVISION
55660021-SD	PSD	000	A1

MATERIAL NUMBER	CUSTOMER	SHEET NUMBER
SEE TABLE	GENERAL MARKET	3 OF 4

DOCUMENT STATUS	P1	RELEASE DATE	2020/12/14 16:13:38

FORMAT: Eng-tega-master-tb-prod-C
REVISION: D
DATE: 2018/01/18

PLATING:				PLATING:	100 M.I. MATTE TIN			PLATING:				PLATING:			
DRAIN HOLES:				DRAIN HOLES:	WITHOUT DRAIN HOLES			DRAIN HOLES:				DRAIN HOLES:			
MTG. OPTION:				MTG. OPTION:	WITH PEGS			MTG. OPTION:				MTG. OPTION:			
HOUSING MAT'L:				HOUSING MAT'L:	NYLON 6/6 94V-0 BLACK			HOUSING MAT'L:				HOUSING MAT'L:			
PACKAGING:				PACKAGING:	PK-5566-001			PACKAGING:				PACKAGING:			
PART NO.	ENG NO.		CKTS	PART NO.	ENG NO.	CKTS		PART NO.	ENG NO.		CKTS	PART NO.	ENG NO.		CKTS
	–			46999-0346	5566-24A2MS-400	24			–				–		
	–				–				–				–		
	–				–				–				–		

SYMBOLS	
FA	= 0
FC	= 0
FD	= 0
S	= 0
▼	= 0
C	= 0
☒	= 0
■	= 0
G	= 0

THIS DRAWING CONTAINS INFORMATION THAT IS PROPRIETARY TO MOLEX ELECTRONIC TECHNOLOGIES, LLC AND SHOULD NOT BE USED WITHOUT WRITTEN PERMISSION

DIMENSION UNITS	SCALE
IN/MM	1:1

GENERAL TOLERANCES (UNLESS SPECIFIED)

	MM	INCH
4 PLACES	±	±
3 PLACES	±	± 0.015
2 PLACES	± 0.38	± 0.02
1 PLACE	± 0.5	±
0 PLACES	±	±
ANGULAR TOL	± 0.5 °	

DRAFT WHERE APPLICABLE MUST REMAIN WITHIN DIMENSIONS

CURRENT REV DESC:

EC NO: 650997
DRWN: HPAN18 2020/10/23
CHK'D: YXZHENG 2020/12/14
APPR: YXZHENG 2020/12/14

INITIAL REVISION:
DRWN: RJF 1987/08/19
APPR: FSMITH 2012/01/10

THIRD ANGLE PROJECTION | DRAWING: C-SIZE | SERIES: 5566

molex

MINIFIT JR VERT HDR ASSY'S W/ PEGS

PRODUCT CUSTOMER DRAWING

DOCUMENT NUMBER	DOC TYPE	DOC PART	REVISION
55660021-SD	PSD	000	A1

MATERIAL NUMBER	CUSTOMER	SHEET NUMBER
SEE TABLE	GENERAL MARKET	4 OF 4

DOCUMENT STATUS	P1	RELEASE DATE	2020/12/14 16:13:38

FORMAT: Eng-tega-master-tb-prod-C
REVISION: D
DATE: 2018/01/18