HB-F700P/F700S/F700F/F700D

SERVICE MANUAL

HB-F700P:
AEP Model
HB-F700S:
SPAIN Model
HB-F700F:
FRANCE Model
HB-F700D:
GERMANY Model

HIT BIT

SPECIFICATIONS

CPU

Processor used	Z80A
Clock frequency	3.58 MHz
WAIT	1 WAIT at CPU M1 cycle
Interrupt	Maskable interrupt Z80A mode 1
Resetting	Automatic at power on/Manual (Memory contents are not maintained.)

Memory

ROM	64K bytes (BASIC 48K bytes, Disk BASIC 16K bytes)
MAIN RAM	256K bytes
VRAM	128K bytes

CRT display

CRT controller	V9938
Display screen	Character/graphic display and border area Initial state: Screen 0:37 characters × 24 lines
Character display	Screen 0: Max. 80 characters×24 lines 16 colors out of 512 colors Screen 1: Max. 32 characters×24 lines 16 colors out of 512 colors
Graphic display	Screen 2: 256(horizontal)×192(vertical) dots 16 colors out of 512 colors Screen 3: 64×48 dots 16 colors out of 512 colors Screen 4: 256×192 dots 16 colors out of 512 colors Screen 5: 256×212 dots, 16 colors out of 512 colors, 4 pages Screen 6: 512×212 dots, 4 colors out of 512 colors, 4 pages Screen 7: 512×212 dots, 16 colors out of 512 colors, 2 pages Screen 8: 256×212 dots, 256 colors, 2 pages
Border area	16-color display
Character font	5×7 dot matrix/character

Keyboard (KBD-12P)

Scanning method	Software scanning
Total number of keys	90 Control keys: 12 Function keys: 5 Edit keys: 8 Numeric keys: 16

— Continued on page 2 —

SAFETY-RELATED COMPONENT WARNING!!

COMPONENTS IDENTIFIED BY SHADING AND MARK ⚠ ON THE SCHEMATIC DIAGRAMS AND IN THE PARTS LIST ARE CRITICAL TO SAFE OPERATION. REPLACE THESE COMPONENTS WITH SONY PARTS WHOSE PART NUMBERS APPEAR AS SHOWN IN THIS MANUAL OR IN SUPPLEMENTS PUBLISHED BY SONY.

ATTENTION AU COMPOSANT AYANT RAPPORT À LA SÉCURITÉ!

LES COMPOSANTS IDENTIFIÉS PAR UNE TRAME ET UNE MARQUE ⚠ SUR LES DIAGRAMMES SCHÉMATIQUES ET LA LISTE DES PIÈCES SONT CRITIQUES POUR LA SÉCURITÉ DE FONCTIONNEMENT. NE REMPLACER CES COMPOSANTS QUE PAR DES PIÈCES SONY DONT LES NUMÉROS SONT DONNÉS DANS CE MANUEL OU DANS LES SUPPLÉMENTS PUBLIÉS PAR SONY.

MICROFILM

HOME COMPUTER
SONY®

Scanned and converted to PDF by HansO, 2001
Original by Bas Kornalijnslijper, MCWF

Input/Output

RGB output	8-pin DIN RGB video: 0–0.7 V, 75 ohms Audio: −5 dBs (0 dBs = 0.775 V)
AUDIO/VIDEO output	6-pin DIN Composite video: 1 Vp-p, black and white, 75 ohms, sync negative Audio: −5 dBs
Sound generator	8-octave, 3 tones and 1 noise output
Audio cassette interface	8-pin DIN jack Baud rate: 1200/2400 bps Remote control function provided
Printer interface	14-pin connector TTL level Standard 8-bit parallel transfer
General purpose interface	9-pin connector (2) For connection of mouse, joystick, etc.
MSX cartridge slot	2

Disk drive section

Disk used	3.5″ micro floppydisk
Disk type	Double-sided or single-sided
Recording capacity (double-sided)	Unformatted: 1M bytes Formatted: 720K bytes Bytes/sector: 512 Sectors/track: 9 Tracks/cylinder: 2 Tracks/disk: 160 Bytes/disk: 720K
Recording density	8717 bits/inch
Track density	135 tracks/inch
Total no. of cylinders	80 cylinders
Total no. of tracks	160 tracks
Recording method	MFM (Modified-Frequency Modulation)
Disk rotation speed	300 rpm
Data transfer rate	250K bits/sec
Average latency time	100 msec
Access time	Average: 350 msec Between tracks: 12 msec Settling time: 30 msec

General

Power requirement	240 V AC, 50/60 Hz (HB-F700B) 220 V AC, 50/60 Hz (HB-F700P)
Power consumption	42 W (main unit only)
Operating conditions	Temperature: 5°C to 35°C (41°F to 95°F) Humidity: 20% to 80%
Storage temperature	−15°C to +60°C (5°F to 140°F)
Dimensions	Main unit: Approx. 355×76×325 mm (w/h/d) (14×3×13 inches) Keyboard: Approx. 409×32×183 mm (w/h/d) ($16\frac{1}{10}\times1\frac{1}{4}\times7\frac{1}{5}$ inches)
Weight	Main unit: Approx. 6.1 kg (13 lb 14 oz)), Keyboard: Approx 1.2 kg (2 lb 10 oz)

SECTION 1
OUTLINE

1-1. FEATURES

- Home computer with MSX-BASIC Version 2.0* incorporated.
- HiBrid disk supplied for easy, visual operation using the mouse instead of the keyboard.
  - Four application programs included.
  - Clock, calculator and calendar available on the same display as the application program.
  - Disk formatting and copying function included.
- Floppydisk drive for quick and easy data processing (4).
- Easy to use free-standing keyboard (6).
- Mouse for operation of the supplied softwares (7).
- Various connectors for up-grading the system:
  - for a printer (1)
  - for a color monitor to create high resolution picture (2)
  - for a second floppydisk drive unit (5)
  - for a tape recorder used as an external memory device (3)

The numbers in the descriptive text are keyed to that in the illustrations.

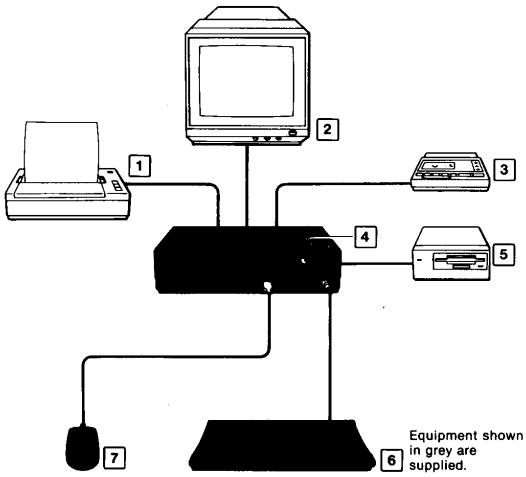

*In this manual, MSX-Version 2.0 is referred to as MSX2-BASIC.

1-2. LOCATION AND FUNCTION OF PARTS

Front panel

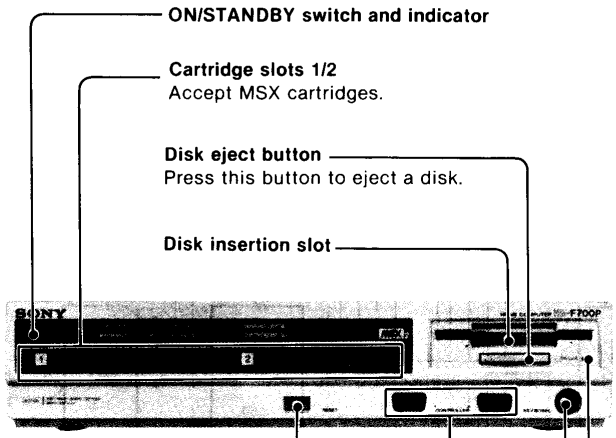

Rear panel

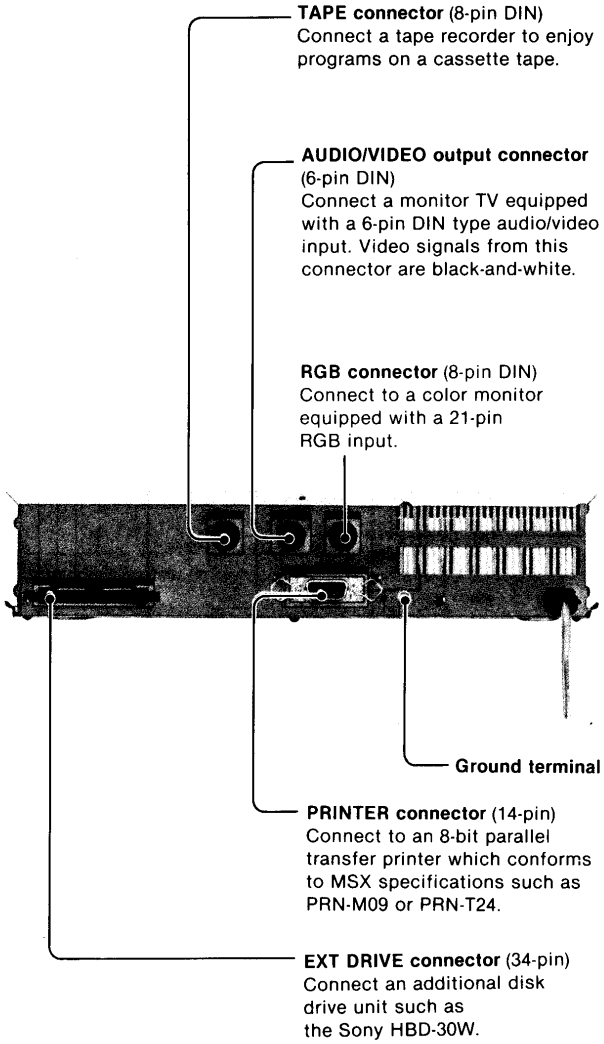
TAPE connector (8-pin DIN)
Connect a tape recorder to enjoy programs on a cassette tape.
AUDIO/VIDEO output connector (6-pin DIN)
Connect a monitor TV equipped with a 6-pin DIN type audio/video input. Video signals from this connector are black-and-white.
RGB connector (8-pin DIN)
Connect to a color monitor equipped with a 21-pin RGB input.
Ground terminal
PRINTER connector (14-pin)
Connect to an 8-bit parallel transfer printer which conforms to MSX specifications such as PRN-M09 or PRN-T24.
EXT DRIVE connector (34-pin)
Connect an additional disk drive unit such as the Sony HBD-30W.

SECTION 2
BLOCK DIAGRAM

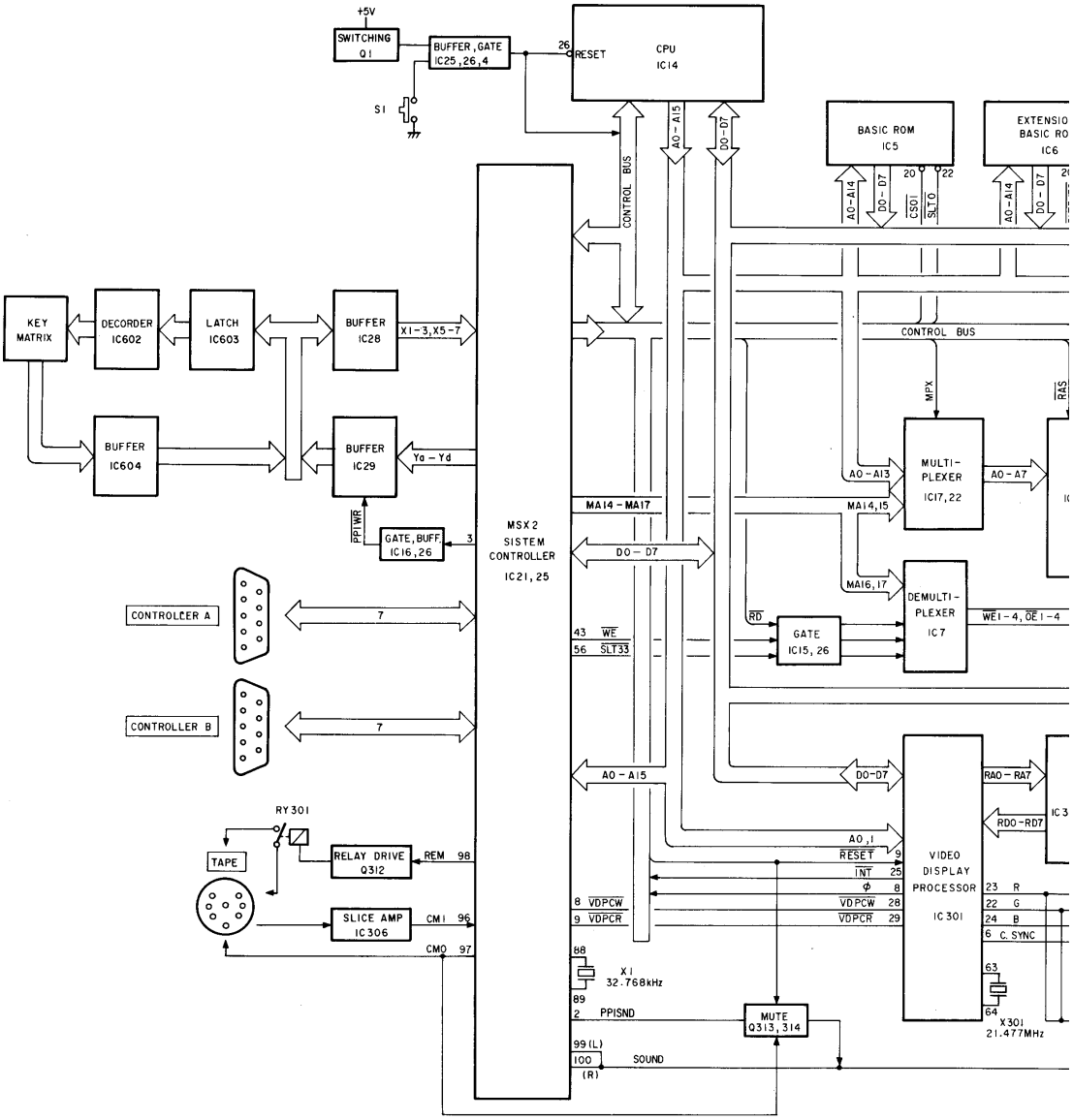

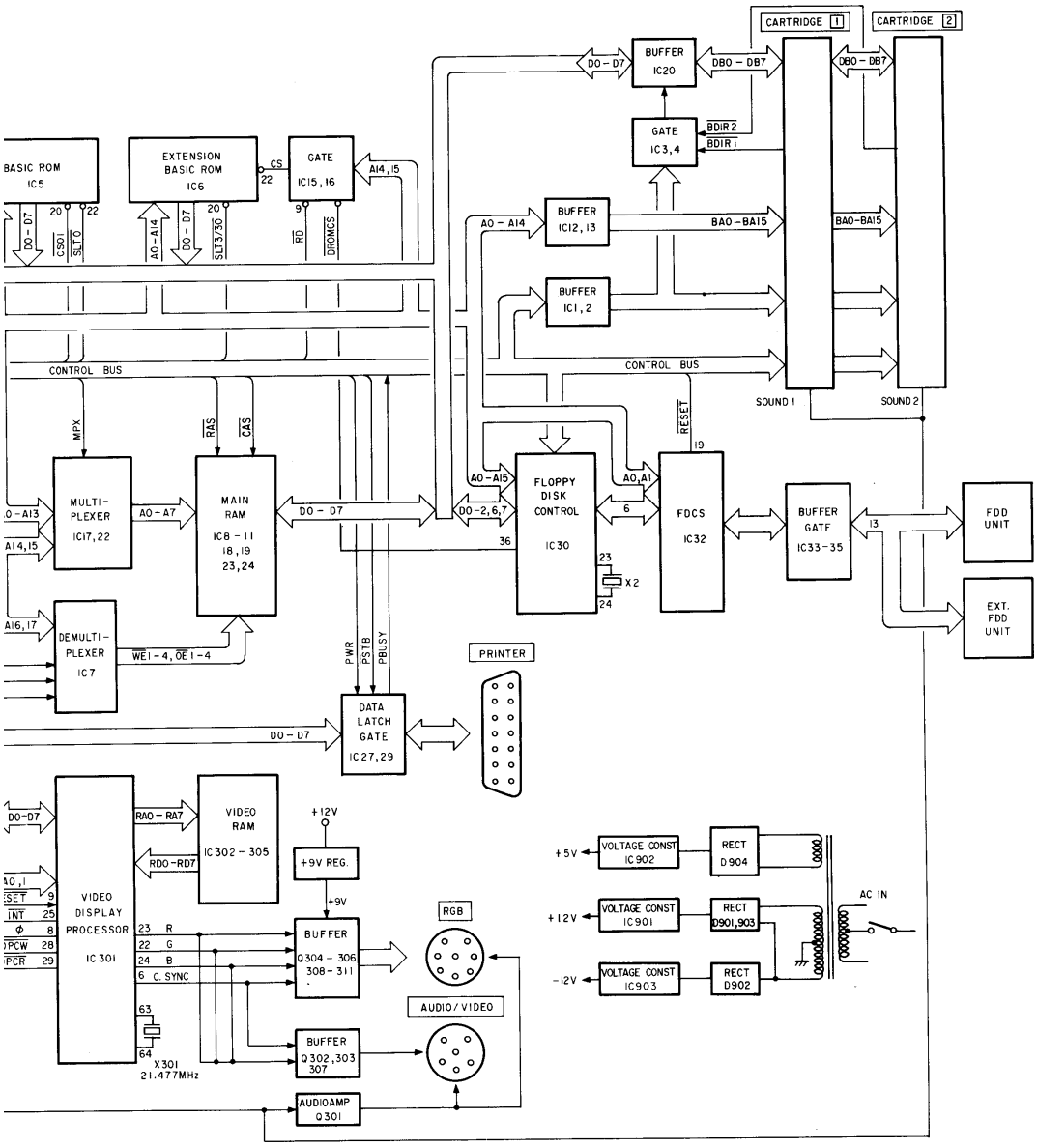
CARTRIDGE 1
CARTRIDGE 2
BUFFER IC20
D0 – D7
DB0 – DB7
GATE IC3,4
BDIR2
BDIR1
BASIC ROM IC5
EXTENSION BASIC ROM IC6
GATE IC15,16
A14,15
CS
BUFFER IC12,13
A0 – A14
BA0 – BA15
BUFFER IC1,2
CONTROL BUS
SOUND 1
SOUND 2
RESET
MPX
RAS
CAS
MULTI-PLEXER IC17,22
A0 – A7
MAIN RAM IC8 – 11 18,19 23,24
FLOPPY DISK CONTROL IC30
A0 – A15
D0 – 2,6,7
A0,A1
FDCS IC32
BUFFER GATE IC33-35
FDD UNIT
EXT. FDD UNIT
X2
DEMULTI-PLEXER IC7
WE1 – 4, OE1 – 4
PWR
PSTB
PBUSY
PRINTER
DATA LATCH GATE IC27,29
VIDEO DISPLAY PROCESSOR IC301
RA0 – RA7
RD0 – RD7
VIDEO RAM IC302 – 305
+12V
+9V REG.
+9V
BUFFER Q304 – 306 308 – 311
RGB
R
G
B
C. SYNC
X301 21.477MHz
BUFFER Q302,303 307
AUDIO/VIDEO
AUDIOAMP Q301
+5V
VOLTAGE CONST IC902
RECT D904
+12V
VOLTAGE CONST IC901
RECT D901,903
-12V
VOLTAGE CONST IC903
RECT D902
AC IN

DRIVE SECTION BLOCK DIAGRAM

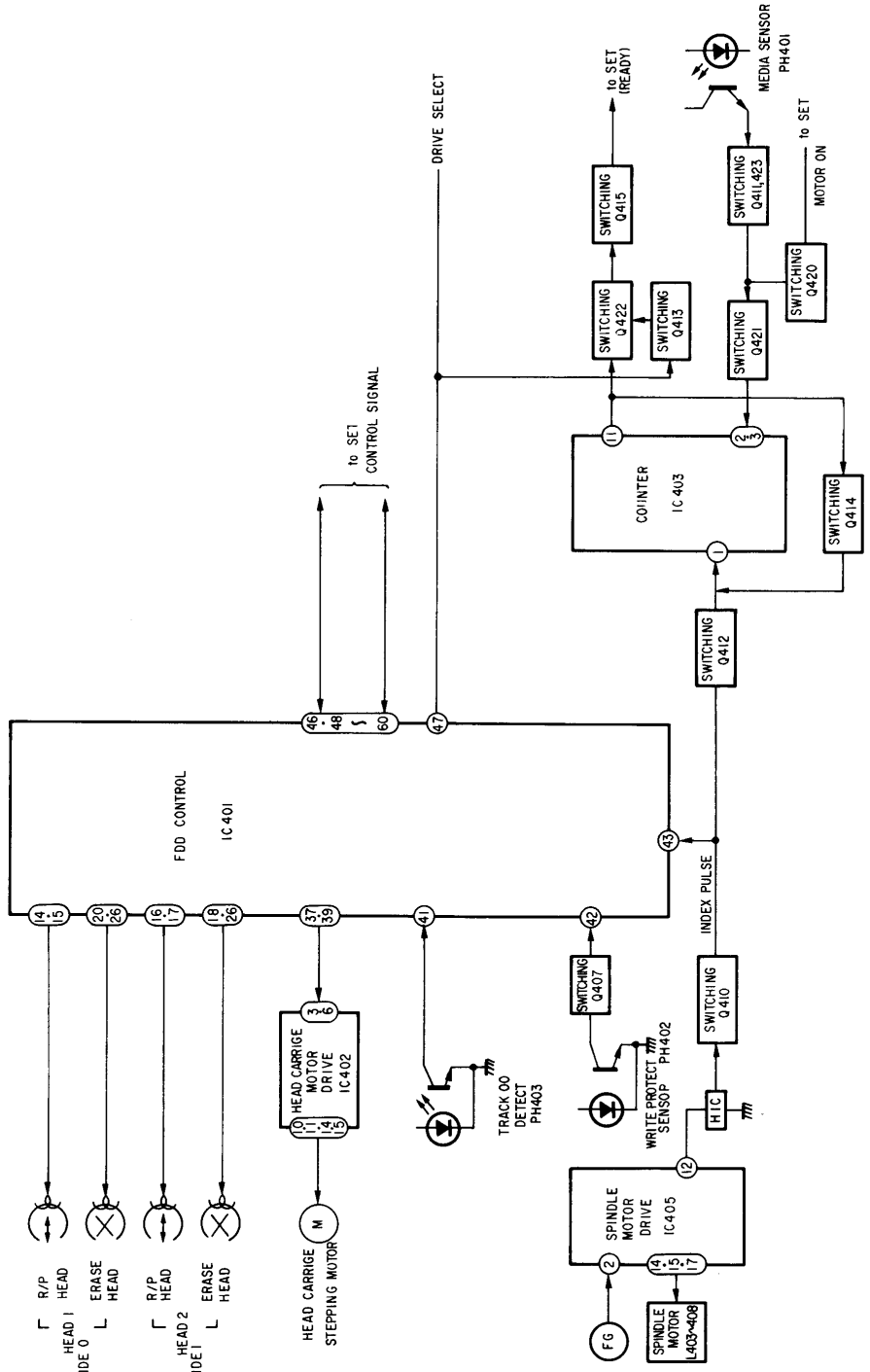

SECTION 3
MSX ENGINE OUTLINE

S1985

Yamaha S1985 is an LSI developed for the MSX2 computer. The S1985, which can be extended based on the MSX2 specification, is used to control peripherals such as a memory control, VDP, keyboard, and printer. It is also internally provided with a sound signal generator (SSG) to generate a tone signal and a timer.

PIN FUNCTION

Pin name	I/O	Function
AB15, AB14, AB7-AB0 10 – 19	I	Z80A CPU address bus input (10 bit)
DB7-DB0 20 – 27	I/O	Z80A CPU data bus input/output (8-bit)
$\overline{M1}$ 32	I	Z80A CPU $\overline{M1}$ input
$\overline{RFSH}$ 33	I	Z80A CPU $\overline{RFSH}$ input
$\overline{MREQ}$ 34	I	Z80A CPU $\overline{MREQ}$ input
$\overline{IORQ}$ 35	I	Z80A CPU $\overline{IORQ}$ input
$\overline{RD}$ 36	I	Z80A CPU $\overline{RD}$ input
$\overline{WR}$ 37	I	Z80A CPU $\overline{WR}$ input
$\overline{WAIT}$ 38	O	WAIT signal output to Z80 CPU (wired logic possible)
MPX 41	O	DRAM address multiplex signal output
$\overline{RAS}$ 39	O	DRAM $\overline{RAS}$ signal output
$\overline{CAS}$ 42	O	DRAM $\overline{CAS}$ signal output
$\overline{WE}$ 43	O	DRAM $\overline{WE}$ signal output
$\overline{SLT33}$ 56	O	SLOT #33 select signal output
$\overline{SLT32}$ 55	O	SLOT #32 select signal output
$\overline{SLT31}$ 54	O	SLOT #31 select signal output
$\overline{SLT3/30}$ 53	O	SLOT #3 or SLOT #30 select signal output
$\overline{SLT2}$ 52	O	SLOT #2 select signal output
$\overline{SLT1}$ 51	O	SLOT #1 select signal output
$\overline{SLT03}/\overline{CS01}$ 50	O	SLOT #03 select or ROM select 0000H-7FFFH signal output
$\overline{SLT02}/\overline{CS0}$ 49	O	SLOT #02 select or ROM select 0000H-3FFFH signal output
$\overline{SLT01}$ 48	O	SLOT #01 select signal output
$\overline{SLT0/00}$ 47	O	SLOT #0 or SLOT #00 select signal output
$\overline{CS2}$ 45	O	ROM select 8000H-BFFFH signal output
$\overline{CS1}$ 44	O	ROM select 4000H-7FFFH signal output
$\overline{CS12}$ 46	O	ROM select 4000H-BFFFH signal output
MA18/KBDIR 3	O	Mapper address or keyboard bus direction signal output
MA17-14 4 – 7	O	Mapper address signal output
YD-YA 81 – 84	O	Keyboard drive signal input

Pin name	I/O	Function
$\overline{X7}$-$\overline{X0}$ 73 – 80	I	Keyboard return signal input
$\overline{CAPS}$ 71	O	CAPS LED signal output
$\overline{KANA}$ 72	O	KANA LED signal output
CMI 96	I	Cassette read signal input
CMO 97	O	Cassette write signal output
REM 98	O	Cassette control signal output
PBUSY 95	I	Printer busy signal input
$\overline{PSTB}$ 94	O	Printer strobe signal output
PWR 93	O	Printer write signal output
$\overline{PRD}$ 92	O	Printer read signal output
PDIR 91	O	Printer direction signal output
FWD1, FWD2 57 , 64	I	Joystick FWD signal input (general-purpose port input)
BACK1, BACK2 58 , 65	I	Joystick BACK signal input (general-purpose port input)
LEFT1, LEFT2 59 , 66	I	Joystick LEFT signal input (general-purpose port input)
RIGHT1, RIGHT2 60 , 67	I	Joystick RIGHT signal input (general-purpose port input)
TRGA1, TRGA2 61 , 68	I/O	Joystick TRGA signal input/output (general-purpose port input/output)
TRGB1, TRGB2 62 , 69	I/O	Joystick TRGB signal input/output (general-purpose port input/output)
STB1, STB2 63 – 70	O	General-purpose port output
$\overline{VDPCW}$ 8	O	VDP write signal output
$\overline{VDPCR}$ 9	O	VDP read signal output
$\overline{KANJI}$ 29	O	Kanji ROM select signal output
$\overline{RSEL}$ 28	I	Extended slot assigned register control signal input
RESET 85	I	Reset signal input
PPISND 2	O	PPI sound signal output
SSGSNDL 99	O	SSG sound LEFT signal output
SSGSNDR 100	O	SSG sound RIGHT signal output
ϕ IN 30	I	Clock signal input
VDD 40		+5V
DVSS 31		0V (GND)
AVSS 1		Sound GND
XIN 89	I	Input from crystal timer
XOUT 88	O	Output to crystal timer
$\overline{ALM}$ 87	O	Alarm signal output
BVSS 86		Timer backup power supply

BLOCK DIAGRAM

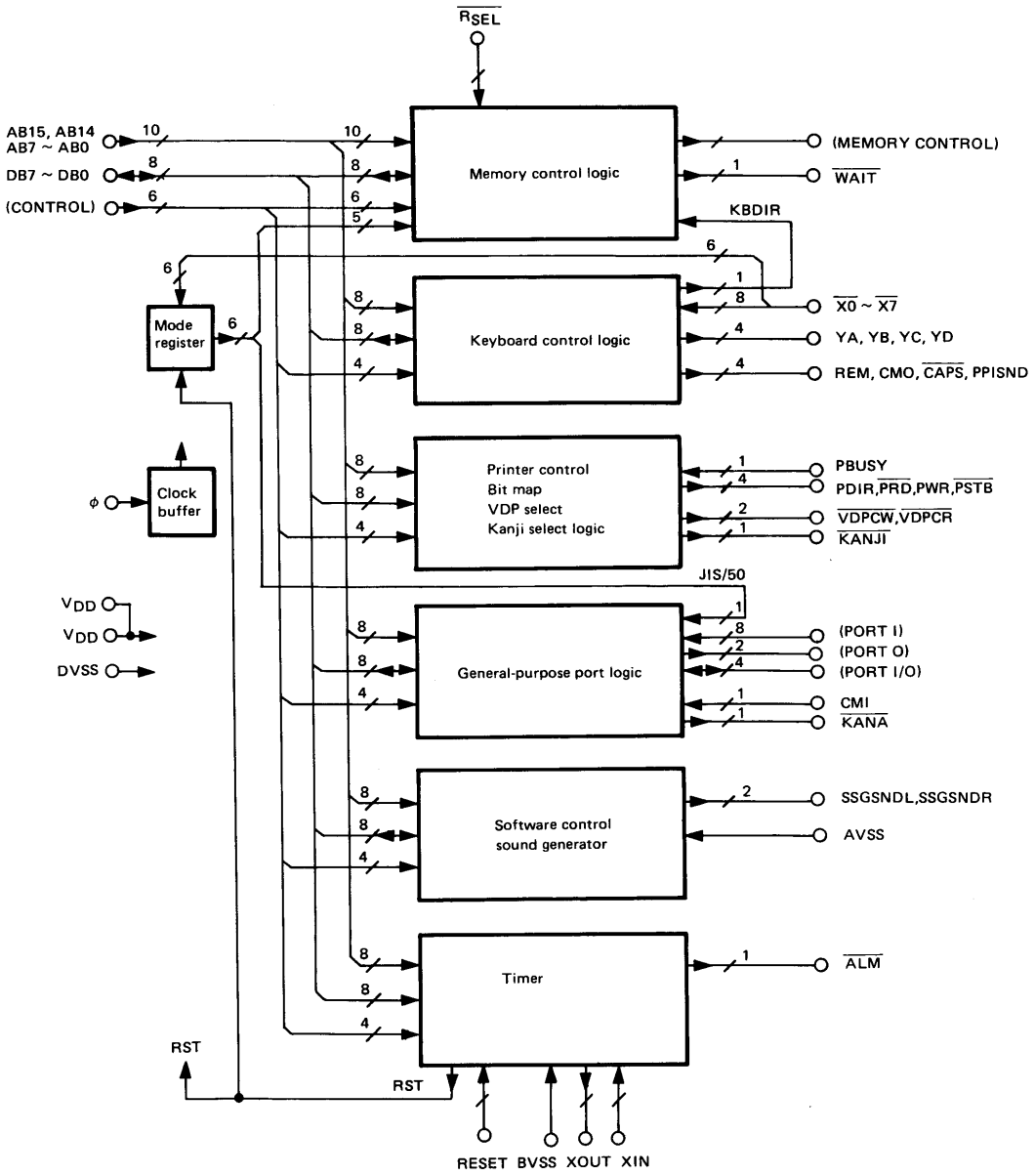

(CONTROL) : $\overline{MI}$, $\overline{RFSH}$, $\overline{MREQ}$, $\overline{IORQ}$, $\overline{RD}$, $\overline{WR}$
(MEMORY CONTROL): $\overline{RAS}$, MPX, $\overline{CAS}$, $\overline{WE}$, $\overline{CS1}$, $\overline{CS2}$, $\overline{CS12}$, $\overline{SLT0/00}$, $\overline{SLT01}$, $\overline{SLT02/CS0}$, $\overline{SLT03/CS01}$, $\overline{SLT1}$, $\overline{SLT2}$.
$\overline{SLT3/30}$, $\overline{SLT31}$, $\overline{SLT32}$, $\overline{SLT33}$, MA14, MA15, MA16, MA17, MA18/KBDIR
(PORTI) : FWD1, FWD2, BACK1, BACK2, LEFT1, LEFT2, RIGHT1, RIGHT2
(PORTO) : STB1, STB2
(PORTI/O) : TRGA1, TRGA2, TRGB, TRGB2

FUNCTION DESCRIPTION

Selecting the Functions

Each function is selected by latching the signal level added to the keyboard return input terminal using a reset signal which is internally loaded during the reset signal input.

Levels and Functions during Initialization

Pin name	Level	Function
$\overline{X2}$	0 1	Enters the RAS Only Refresh mode. Enters the Hydon Refresh mode.
$\overline{X5}$	0	The MA18/KBDIR pin outputs a mapper address signal.
	1	The MA18/KBDIR pin outputs a keyboard bus direction signal.
$\overline{X6}$	0	Kana JIS array
	1	Kana syllabary array
$\overline{X7}$	0	Requests one wait cycle during the VDP read or write operation.
	1	Not request one wait cycle during the VDP read or write operation.
$\overline{X3}$	0	The $\overline{SLT03}/\overline{CS01}$ and $\overline{SLT02}/\overline{CS0}$ pins output a slot select signal.
	1	The $\overline{SLT03}/\overline{CS01}$ and $\overline{SLT02}/\overline{CS0}$ pins output a ROM select signal.
$\overline{X1}$	0	Extends slot 0.
	1	For $\overline{X3}$ = 1, slot 0 is not extended.

Extended Slot Register

The extended slot register has a set of registers used for slots 0 and 3 which can be extended at the same time. This register outputs inverted data during the read operation.

Since address FFFF is high, the slot can be extended when a NANDed signal at addresses AB8 through AB13 is input to the RSEL terminal; no extended slot select signal is output during access to address FFFF(H).

Extended slot	Address	R/W	B7	B6	B5	B4	B3	B2	B1	B0
Slot 0	FFFF (8H)	R/W								
Slot 3	FFFF (8H)	R/W								
				*4		*3		*2		*1

*1 Extended slot designation at addresses 0000 (H) through 3FFF (H)
*2 Extended slot designation at addresses 4000 (H) through 7FFF (H)
*3 Extended slot designation at addresses 8000 (H) through BFFF (H)
*4 Extended slot designation at addresses C000 (H) through FFFF (H)

The function for extending each slot is controlled depending on the signal level at X1 and X3 terminals during the reset operation.

Address Map and Slot Extension

When no slot is extended

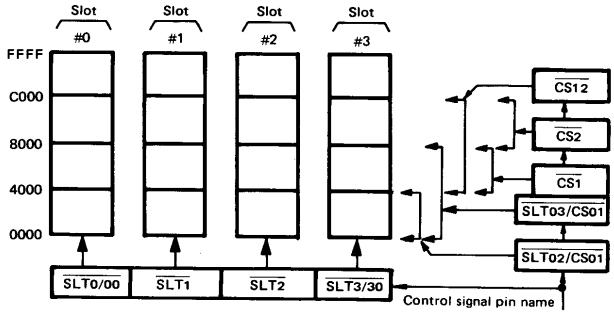

When slot 3 is extended

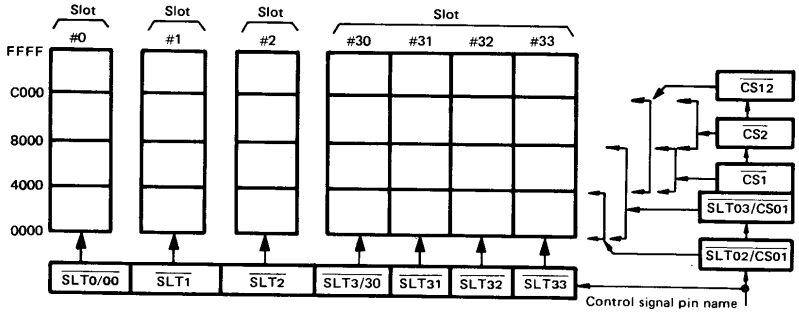

When slots 0 and 3 are extended

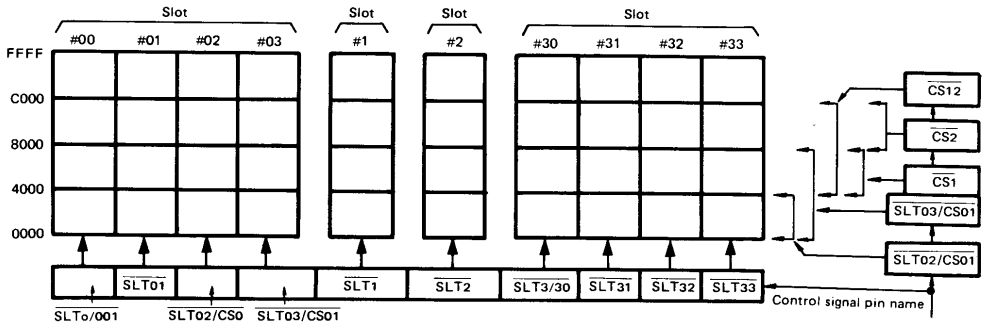

I/O Address and Function

Function	I/O address	W/R	Description
Backup RAM	40 (H) 41 42	W/R W W/R	Maker ID number register Backup RAM address latch Backup RAM write/read
Bit map	46 47	W W/R	Foreground/background color write Pattern write, foreground/background color read
Printer	90 91 93	W/R W/R W	Printer strobe write Printer status read Printer data write/read Printer bus direction
VDP	98-9F 98-9F	W R	VDP write VDP read
SSG	AB0 AB1 AB2	W W R	SSG address latch SSG data write SSG data read
Keyboard and slot designation	A8 A9 AA AB3	W/R R W/R W	Slot designated register Keyboard return signal read Keyboard drive, cassette, PPI sound write/read Mode selection
Timer and slot designation	B4 B5	W W/R	Timer and backup RAM address latch Timer and backup RAM data write/read
Kanji	D8, D9	W/R	Kanji write/read
System control	F5	W	System control
Mapper	FC FD FE FF	W/R W/R W/R W/R	Mapper register page 0 Mapper register page 1 Mapper register page 2 Mapper register page 3

Bit Assignment of Keyboard and Slot-Designated Register

Function	Bit	W/R	Description	
Slot-designated register	0 1	W/R	Slot-designated signal at addresses 0000 (H) through 3FFF (H)	
	2 3		Slot-designated signal at addresses 4000 (H) through 7FFF (H)	
	4 5		Slot-designated signal at addresses 8000 (H) through BFFF (H)	
	6 7		Slot-designated signal at addresses C000 (H) through FFFF (H)	
Keyboard return	0 1 2 3 4 5 6 7	R	$\overline{X0}$ $\overline{X1}$ $\overline{X2}$ $\overline{X3}$ $\overline{X4}$ $\overline{X5}$ $\overline{X6}$ $\overline{X7}$	Keyboard return signal
Keyboard drive register	0 1 2 3	W/R	YA YB YC YD	Keyboard drive signals YA through YD
	4		Cassette control REM signal	
	5		Cassette write CMO signal	
	6		CAPS signal for $\overline{CAPS}$ lamp	
	7		Sound PPISND signal	
Mode selection	0 1 2 3 4 5 6 7	W	0 1 0 0 0 0 0 1	The level shown on the left allows all of the slot-designated registers and keyboard drive registers to be cleared. This function is the same as that in which ports PA and PC are set to the output position and port PB to the input position in MODE 0 of 8255A.
	0 1 2 3 4 5 6 7	W	B0 B1 B2 B3 0 0 0 0	The level shown on the left enables the keyboard drive register bit to be set or reset. B1 through B3 indicate the bit number. Set when B0 is "1" and reset when it is "0".

Backup RAM (8 bits x 16)

When I/O address 40 (H) is read after ASCII ID number FF (H) is written into I/O address 40 (H), inverted data 01 (H) is obtained. This indicates that the backup RAM (8 bits x 16) and bit map function are ready to be used. When RAM addresses XO (H) through XF (H) are set using low-order four bits of the address data in I/O address 40 (H), data can be written or read using I/O address 42 (H).

Bit Map Function

As described above, after I/O address 40 (H) is accessed, data is written into I/O address 46 (H) two times (or more), then written into I/O address 47 (H). When I/O address 47 (H) is read, the last data written into I/O address 47 (H) is obtained if bit 7 of data written into I/O address 47 (H) is "0", and the preceding data last written into I/O address 46 (H) is obtained if bit 7 is "1". After that, data written into I/O address 47 (H) is shifted by one bit to the high-order digit, and data of bit 7 is shifted to bit 0. Therefore, data can be obtained in accordance with the data level acquired every time I/O address 47 (H) is read.

Printer

PBUSY: When a signal is input to the PBUSY pin for read operation, the same signal level as that input to B1 is output.

I/O address	R/W	B7	B6	B5	B4	B3	B2	B1	B0
90 (H)	R								

$\overline{\text{PSTB}}$: When data is written as B0=0, the $\overline{\text{PSTB}}$ pin becomes "0" when the WR signal is returned to "1". After that, when data is written as B0=1, the $\overline{\text{PSTB}}$ pin is not returned to "1".

I/O address	R/W	B7	B6	B5	B4	B3	B2	B1	B0
90 (H)	W								

PWR: If data is written when the PDIR pin is "1" (in the output state), a positive PWR signal corresponding to the $\overline{\text{WR}}$ signal's pulse width is output to the PWR pin. When this PWR signal is returned to "0", the external circuit latches and outputs the data. When the PDIR pin is "0" (in the input state), the PWR pin remains "1". When the PDIR pin is returned again to the output state, the PWR pin remains unchanged. After I/O address 91 (H) is accessed, the PWR pin becomes "0".

I/O address	R/W	B7	B6	B5	B4	B3	B2	B1	B0
91 (H)	W	Data							

$\overline{\text{PRD}}$: If data is read when the PDIR pin is "0" (in the input state), a negative $\overline{\text{PRD}}$ signal corresponding to the $\overline{\text{RD}}$ signal's pulse width is output to the $\overline{\text{PRD}}$ pin. Using this PRD signal, the external gate is opened and data can be read.

I/O address	R/W	B7	B6	B5	B4	B3	B2	B1	B0
91 (H)	R	Data							

PDIR: When data is written as B1=0 and B0=1, "1" is continuously output from the PDIR pin. MSX then enters the output state. When data is written as B1=0 and B0=1, "0" is continuously output from the PDIR pin. MSX then enters the input state.

I/O address	R/W	B7	B6	B5	B4	B3	B2	B1	B0	
93 (H)	W							1	1	*1
								1	0	*2
								0	1	*3
								0	0	*4

*1 Output state or $\overline{PRST}$ canceled
*2 Input state or $\overline{PRST}$ canceled
*3 $\overline{PRST}$ output
*4 $\overline{PRST}$ canceled

The $\overline{PRST}$ signal can be generated using an external circuit.

When data is written as B1=0 and B0=1 during the reset operation, "0" is continuously output from the $\overline{PRD}$ pin and "1" from the PDIR pin. The $\overline{PRST}$ signal is produced using the resultant two signals. When data is set to and written into the level other than B1=0 and B0=1, the $\overline{PRST}$ signal is canceled.

Mapper

I/O addresses FC (H) through FF (H) have mapper register pages 0 through 3. Their effective number of bits is five (B4 through B0) which correspond to mapper addresses MA18 through MA14. Mapper register pages 0 through 3 are selected using addresses AB15 and AB14, and the resultant content is output as an address.

For a 512k-byte RAM using mapper addresses MA18 through MA14, the 16k-byte area obtained by dividing the 512k-byte capacity which the mapper register content indicates is selectively accessed using addresses AB15 and AB14 by 32. As a result, the function appears if the address is extended.

I/O address	R/W	B7	B6	B5	B4	B3	B2	B1	B0	Register	AB15	AB14
FC (H)	R/W									Mapper register page 0	0	0
FD	R/W									Mapper register page 1	0	1
FE	R/W									Mapper register page 2	1	0
FF	R/W									Mapper register page 3	1	1

Mapper address	MA18	MA17	MA16	MA15	MA14	

Keyboard Bus Direction

When data is written into I/O addresses AA (H) and AB (H), the keyboard bus direction signal is output at a period of one and a half cycles at the completion of the I/O cycle. This reduces the number of signal lines between the keyboard and main system.

SSG and General-Purpose Port

The SSG is controlled using 14 registers which are capable of reading or writting (the registers can be read without being influenced by sound).

Sound is generated by the following: an 8-octave, 3-sequence rectangular wave generator; a one-sequence pseudo random noise generator; an envelope generator for 5-bit single attenuation and repeated attenuation; a volume controller; a mixer for mixing music and noise; and a 5-bit DA converter. The general-purpose port consists of output and input port portions through a register which is capable of reading or writting.

Register Array

When high-order bits DB7 through DB4 of 8-bit address data are "0 (H)", low-order bits DB3 through DB0 select 15 registers. The address data which has been loaded is held until the next address is loaded and is not influenced by the data write/read operation.

The register array is shown in the table below.

Register Array Table

Register	Address (H)	Function \ Bit	B7	B6	B5	B4	B3	B2	B1	B0
R0	00	Frequency of channel A	Fine adjustment of 8-bit tone							
R1	01						Coarse adjustment of 4-bit tone			
R2	02	Frequency of channel B	Fine adjustment of 8-bit tone							
R3	03						Coarse adjustment of 4-bit tone			
R4	04	Frequency of channel C	Fine adjustment of 8-bit tone							
R5	05						Coarse adjustment of 4-bit tone			
R6	06	Noise frequency					5-bit noise frequency			
R7	07	Setting emixer and general port	* Port		Noise			Tone		
			"1"	"0"	C	B	A	C	B	A
R8	08	Volume of channel A				M	L3	L2	L1	L0
R9	09	Volume of channel B				M'	L3	L2	L1	L0
RA	0A	Volume of channel C				M	L3	L2	L1	L0
RB	0B	Envelope frequency	8-bit fine adjustment							
RC	0C		8-bit coarse adjustment							
RD	0D	Envelope shape				CONT	ATT	ALT	HOLD	
	0E	General input port data	See the general port bit assignment table.							
RF	0F	General output port data								

* The port of register R7 should always be set to the level shown in the table.

General-Purpose Port

The input and output ports are controlled by output port data holding register RF which is operated at address 0E (H) (input) and address 0F (H) (output). The relationship between the bits and input/output pins is shown in the general-purpose port bit assignment table.

GENERAL-PURPOSE PORT BIT ASSIGNMENT TABLE

Port	Bit	I/O	Pin name connected	
Input	B0 B1 B2 B3 B4 B6 B7	I	FWD1 or FWD2 BACK 1 or BACK 2 LEFT1 or LEFT2 RIGHT1 or RIGHT2 TRGA1 or TRGA2 JIS/50 CM1	FWD1 and FWD2 are selected using B6 at the output port. For B6="1",
Output	B0 B1 B2 B3 B4 B5 B6 B7	O	TRGA1 TRGB1 TRGA2 TRGB2 STB1 STB2 Input select of input ports B0 through B5 (not output externally)	

Setting the Tone Frequency (controlled using registers R0 through R5)

The rectangular wave frequency produced by a 3-sequence tone generator in channels A, B, and C is set using registers R0 through R5. R0 and R1 control channel A, R2 and R3 channel B, and R4 and R5 channel C. Oscillation frequency FT is determined by register value TP (decimal) as shown below. In this case, Fϕ indicates the clock frequency.

$$FT = \frac{F\phi}{32TP}$$

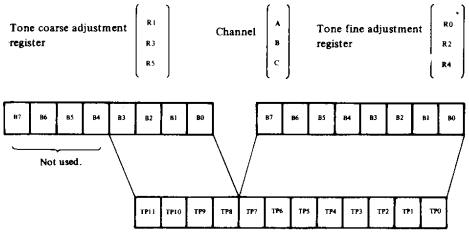

Setting the Noise Frequency (controlled by register R6)

Noise frequency FN is determined by register value NP (decimal) as shown below. In this case, Fϕ indicates the clock frequency.

$$FN = \frac{F\phi}{32NP}$$

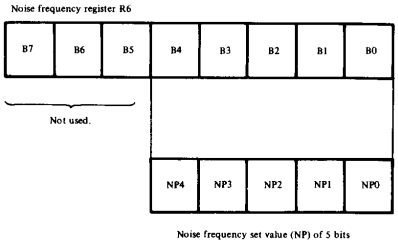

Setting the Mixer (controlled by register R7)

The mixer is used to mix a tone and noise. Mixing is determined by bits B5 through B0 of register R7. If "0" is written into the register, sound is output. Therefore, if both noise and tone are written as "0", they are mixed and output. If either noise or tone is written as "0", only the sound written as "0" is output. If both noise and tone are written as "1", they are not output.

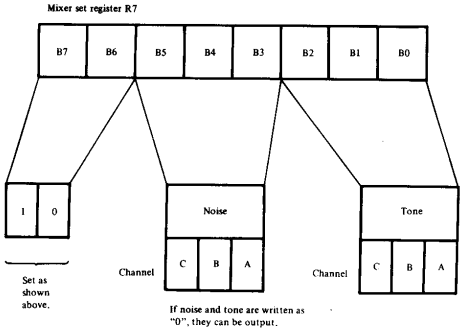

Volume Control (controlled by registers R8 through RA)

The volume in channels A, B, and C is controlled using registers R8 through RA. Whether the volume is fixed (M=0) or changed (M=1) is selected in mode M. For M=0, one of the 16 combined levels is selected using 4-bit level select signals L3, L2, L1, and L0 to generate a sound. To change the volume, change select signals L3, L2, L1, and L0. For M=1, the volume is controlled using 5-bit signals E4, E3, E2, E1, and E0 which are produced by an internal envelope generator. In this case, signals E4, E3, E2, E1, and E0 are changed with the lapse of time, so the volume is also changed.

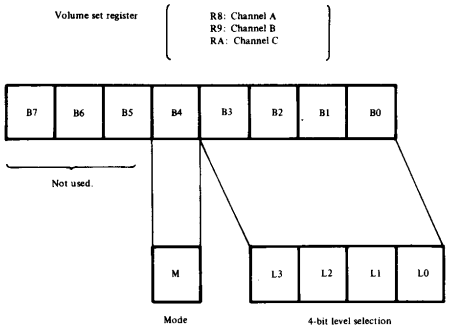

Setting the Envelope Frequency (controlled by registers RB and RC)

Envelope repeated frequency FE is determined by envelope frequency set value EP (decimal) as shown below. In this case, Fϕ indicates the clock frequency.

$$FE = \frac{F\phi}{512EP}$$

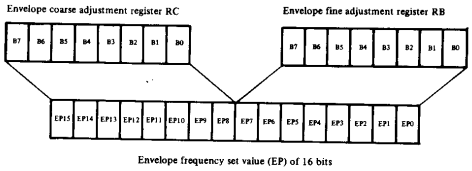

Envelope Shape Control (controlled by register RD)

The envelope level is determined by a 5-bit (L4, L3, L2, L1, and L0) envelope generator. The envelope shape is produced by incrementing or decrementing the count of the envelope generator and by stopping or repeating it at one cycle. The resultant shape is controlled by bits B3 through B0 of register RD.

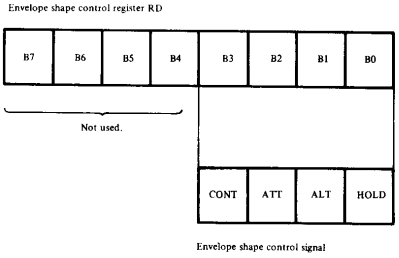

Using the CONT, ATT, ALT, and HOLD signals, the envelope has various shapes as shown below.

Envelope Shape Table

B3	B2	B1	B0	Envelope shape
CONT	ATT	ALT	HOLD	
0	0	X	X	
0	1	X	X	
1	0	0	0	
1	0	0	1	
1	0	1	0	
1	0	1	1	
1	1	0	0	
1	1	0	1	
1	1	1	0	
1	1	1	1	

→| 1/fE |← Repeated period of envelope

Sound Outputs (SSGSNDL, SSGSNDR)

Among the 3-sequence tone signals in channels A, B, and C which are generated by data set in each register, channel B outputs the tone signal to the SSGSNDL pin and channel C outputs it to the SSGSNDR pin. Channel A outputs the tone signal to the SSGSNDL and SSGSNDL and SSGSNDR pins for mixing. As described above, the sound output is used as a stereophonic output with the outputs in the right and left channels. It can also be used as a monaural output by strapping between the SSGSNDL and SSGSNDR pins.

Timer and RAM (4 bits x 26)

The timer block consists of a counter in the next stage of the crystal oscillation circuit; a timer counter indicating seconds, minutes, hours, day of the week, days, month, and year; and an alarm register for minutes, hours, day of the week, and day. Setting or reading the time, calendar timer data, or alarm data is controlled through a mode register. All data can be backed up. The RAM (4 bits x 26) block can also be backed up as in the timer block.

Address Assignment and Initial Condition of Each Counter and Register

If the high-order 4-bits of 8-bit address data are set to any value, the function is selected by the four modes which are indicated using the low-order 4-bits (DB3 through DB0) and address XD (H) mode registers M1 and M0. Addresses X0 (H) through XC (H) can be read and written. Addresses XD (H) through XF (H) can be written only irrespective of their mode state.

Counters and registers have no fixed value during the power-on sequence.

Address Assignment and Function

Mode	0					1					2	3
Address (H)	Bit / Function	B3	B2	B1	B0	Bit / Function	B3	B2	B1	B0	Func-tion	Func-tion
x 0	1 sec counter											
x 1	10 sec counter	X										
x 2	1 min counter					1 min alarm register						
x 3	10 min counter	X				10 min alarm register	X					
x 4	1 hr counter					1 hr alarm register						
x 5	10 hr counter	X	X			10 hr alarm register	X	X			RAM	RAM
x 6	Week counter	X				Week alarm register	X				4 bits x 13	4 bits x 13
x 7	1 day counter					1 day alarm register						
x 8	10 day counter	X	X			10 day alarm register	X	X				
x 9	1 month counter											
x A	10 month counter	X	X	X		12/24 hr selector	X	X	X			
x B	1 year counter					Leap year counter	X	X				
x C	10 year counter											

Address (H)	Bit / Function	B3	B2	B1	B0
X D	Mode register	Timer EN	Alarm EN	Mode	
				M1	Mo
X E	Test register	Test			
		T3	T2	T1	T0
X F	Reset controller 16.1Hz register	1Hz ON	16Hz ON		Alarm

Note: The week counter counts from 0 to 6 with the relationship with respect to the day of the week defined voluntarily.

Mode Setting and Alarm and Timer EN Functions (Address XD (H))

The 4-bit mode register consists of mode selectors M1 and M2, timer EN, and alarm EN. The function is as shown in the table below.

Mode	M1	M0	Description
0	0	0	Enables setting and reading of the time and calendar.
1	0	1	Enables setting and reading of the alarm, 12/24 hour, and leap year.
2	1	0	Enables writing and reading of the RAM (4 bits x 13).
3	1	1	Enables writing and reading of the RAM (4 bits x 13).

Function	Level	Description
Alarm EN	0	No alarm signal is output to the $\overline{AML}$ pin.
	1	An alarm signal is ready to be output to the $\overline{AML}$ pin.
Timer EN	0	Stops the counter operation after second.
	1	Starts counting.

Reset Controller Function and 16Hz/1Hz Register Setting (Address XF (H))

The alarm and time RESET functions are activated during the write operation, and they have no register.

The 16Hz ON and 1Hz ON functions provided with registers are shown below.

Function	Level	Description
Alarm RESET	1	All the alarm registers are reset during the write operation.
Time RESET	1	The counter operation before second is reset during the write operation.
16Hz ON	0	A 16Hz signal is output to the $\overline{ALM}$ pin.
1Hz ON	0	A 1Hz signal is output to the $\overline{ALM}$ pin.

Test Register (Address x E (H))

The test register consists of T3 through T0. The register is used for testing (except test 0). To activate the timer for the first time, therefore, set each bit to 0 to obtain test 0.

Test	T3	T2	T1	T0	Description
0	0	0	0	0	Activated as a timer.
1	0	0	0	1	Enters the test 1 state.
2	0	0	1	0	Enters the test 2 state.
3	0	0	1	1	Enters the test 3 state. Output to the $\overline{ALM}$ pin.
4	0	1	0	0	Enters the test 4 state.
8	1	0	0	0	Enters the test 8 state.

Setting the 12/24-Hour Selector (Mode 1, Address XA (H))

Whether a 12-hour timer or 24-hour timer is set when the level shown in the table below is written into this register can be determined. The timer should be set after this setting.

Function	Level	Description
12/24-hour selector	0	Activated as a 12-hour timer. In this case, the 10-hour counter and alarm register B1 indicate AM and PM. For B1=0, it indicates AM. For B1=1, it indicates PM.
	1	Activated as a 24-hour timer.

Setting the Leap Year Counter (Mode 1, Address XB(H))

When the level shown in the table below is set in this counter, the counter corresponds to a leap year. The time and calendar should be set after this setting. This counter is also counted up simultaneously with a year counter.

Function	B1	B0	Description
Leap year counter	0	0	Activated as a leap year this year.
	0	1	Activated as a leap year three years later.
	1	0	Activated as a leap year two years later.
	1	1	Activated as a leap year next year.

Setting and Reading the Time and Calendar (Mode 0, Addresses X0 (H) through XC (H))

The timer counter is set by setting the address and writing a valid value into the required bits as time and calendar timer data, in accordance with the address assignment and function table. During the read operation, the timer data can also be obtained by setting and reading the address. Invalid bit levels are always set to "0".

Setting and Reading the Alarm (Model 1, Addresses X2 (H) through X8 (H))

The alarm register is set by setting the address and writing a valid value into the required bits as time and calendar alarm, in accordance with the address assignment and function table. During the read operation, data in the alarm register can also be obtained by setting and reading the address.

When the alarm register indicating minutes, hours, day of the week, day, and year coincides with those of the timer counter (the alarm EN register is in the output enable state), level "0" is output to the $\overline{ALM}$ pin.

When the alarm register is reset using an alarm RESET bit, the consequent written alarm register data coincides with the timer counter. Assume that the alarm register data which has not been written has already coincided with the timer counter. The alarm register data is output to the $\overline{ALM}$ pin. Therefore, the output level at the $\overline{ALM}$ pin is "0" at all times while the alarm register is reset using the alarm RESET bit.

Pin Function Description (M51017AP)

Pin No.	Name	Function
Common block		
13	VCC	5V power supply
19	VBB	12V power supply
21 – 25	GND	Ground (analog)
51 – 55	GND	Ground (digital)
18	CT0	Supplies write and erase currents during the write operation.
20	CT1	
14, 15	HEAD1	Inputs current from the head during the read operation and receives it from the head during the write operation.
16, 17	HEAD0	
Read circuit		
12, 13	OFFSET DECOUPLING (GAIN ADJ)	Connect capacity with a voltage gain of 49dB.
10, 11	AMPLIFIER OUTPUT	Differential output pin of preamplifier
8, 9	ACTIVE DIFFERENTIATOR INPUT	Differentiator input pin
6, 7	DIFFERENTIATOR COMPONENT	Determines the differential characteristics and externally adjusts the peak shift.
4, 5	M/M COMPONENT	Sets the timer constant of a monostable multivibrator to prevent read data from the erroneous output.
2, 3	M/M COMPONENT	Sets the timer constant of a monostable multivibrator to determine the output pulse width of read data.
Write circuit		
27	WRITE CURRENT ADJ	Sets the write current.
26	Erase	Receives the erase current. Set using an external resistor.
Monostable multivibrator		
28	M/M-1	Sets the operation start timing of an erasure circuit. WR GATE (at pin 56) is activated at trailing edge ( ).
29	M/M-2	Sets the operation stop timing of an erasure circuit. WR GATE is activated at the leading edge. ( ).
31	M/M-3	Outputs 2 pulses from 1-step pulse input to trigger M/M-4.
32	M/M-4	Triggered using M/M-3. Output 2 pulses from 1-step pulse input.
34	M/M-5	Sets the time for controlling the high-voltage (12V) circuit to drive a stepping motor.
Open collector output		
44	INUSE	Goes "L" when DRIVE SELECT (at pin 47) is "L".
46	INDEX	Goes "L" when TRACK 0 SENSOR input (at pin 41) is "H" and stepping motor drive pulse outputs A and B (at pins 39 and 37) are "H".
57	TRACK 0	Goes "L" when TRACK 0 SENSOR input (at pin 41) is "H" and stepping motor drive pulse outputs A and B (at pins 39 and 37) are "H".
58	WR PROTECT	Goes "L" when EPT SENSOR input (at pin 42) is "L".
59	RD DATA	Read data output pin. Output is blocked during the write/erase operation.
36	VOLTAGE CONTROL	Output pin to control the high-voltage (12V) circuit for driving a stepping motor. Goes "L" when M/M-5 output is "H" or RESET input (at pin 35) is "L".
Totem pole output		
40	STEPPER DRIVE PULSE	A Generates a 2-phase exciting drive pulse. Generates a 1 step/1 pulse when STEP SWITCH input (at pin 30) is "L" and generates a 1 step/2 pulse when it is "H".
39		A
38		B
37		B
Schmidt input		
47	DRIVE SELECT	Indicates the select state of a drive unit. Selected during "L".
48	DIRECTION	Input pin to designate the head moving direction. The head moves in the center direction when the pin is "L". It moves in the outer circumference direction when "H".
49	STEP	Input pin to generate a pulse for moving the head. Input is blocked during the write operation.
50	WR DATA	Recording data input pin.
56	WR GATE	Recording becomes valid during the "L" input.
60	SIDE 1	Side select input pin. Selects side 1 when "L" and side 0 when "H". Input is blocked during the write/erase operation.
43	INDEX SENSOR	Indicates the disk rotation state and senses input every rotation. INDEX (at pin 46) goes "L" when "H".
42	FPT SENSOR	Input pin to determine the disk recording capacity. WR PROTECT (at pin 58) goes "L" when "L".
41	TRACK 0 SENSOR	TRACK 0 SENSOR input pin. TRACK 0 (at pin 57) goes "L" when "H".
Input		
35	RESET	POWER ON RESET input pin. Initializes each monostable multivibrator and flop-flop when "L".
30	STEP SW	Input pin to select a 1 step/1 pulse and 1 step/2 pulse.

SECTION 4
DISASSEMBLY

Note: Follow the disassembly procedure in the numerical order given.

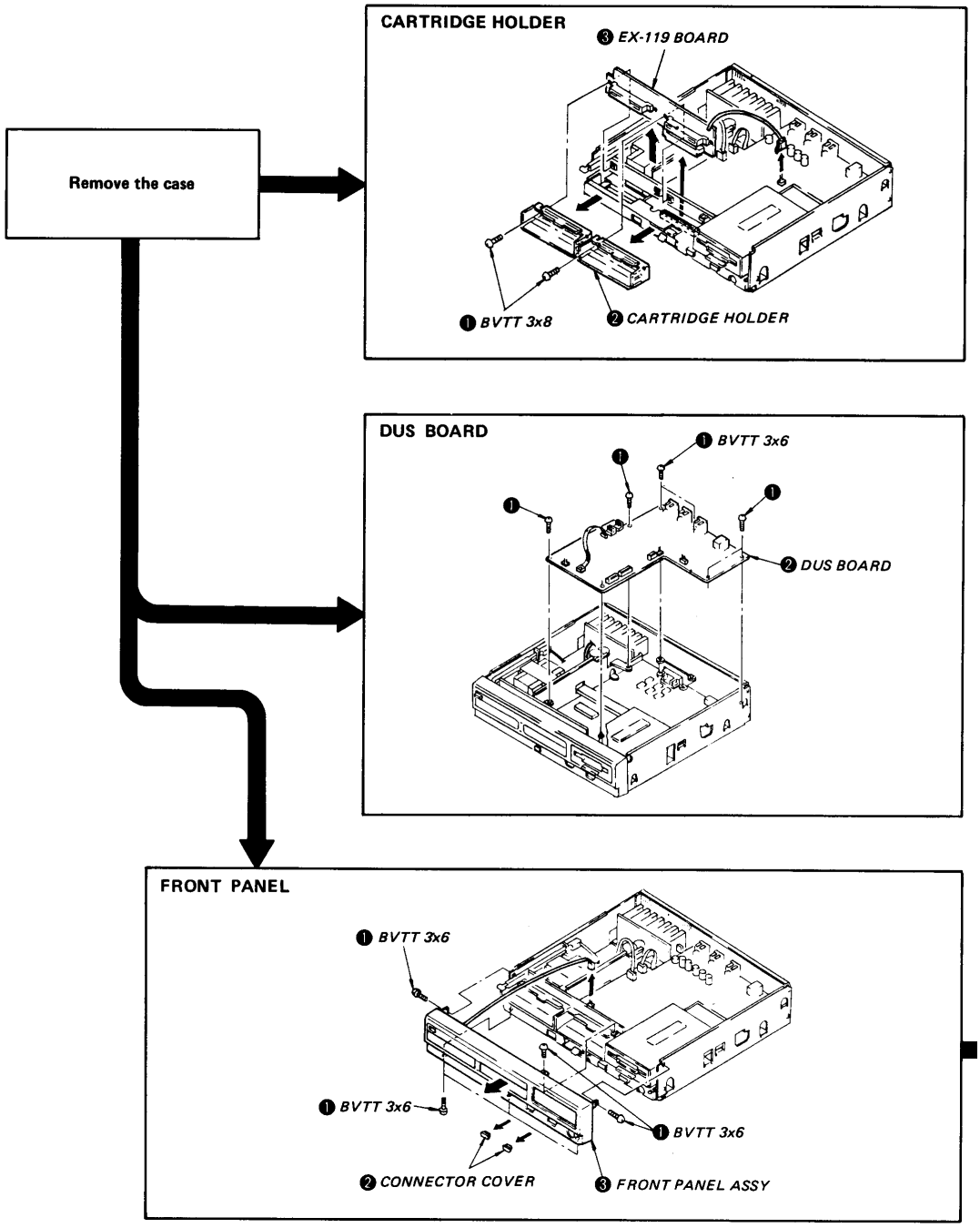

MAIN BOARD

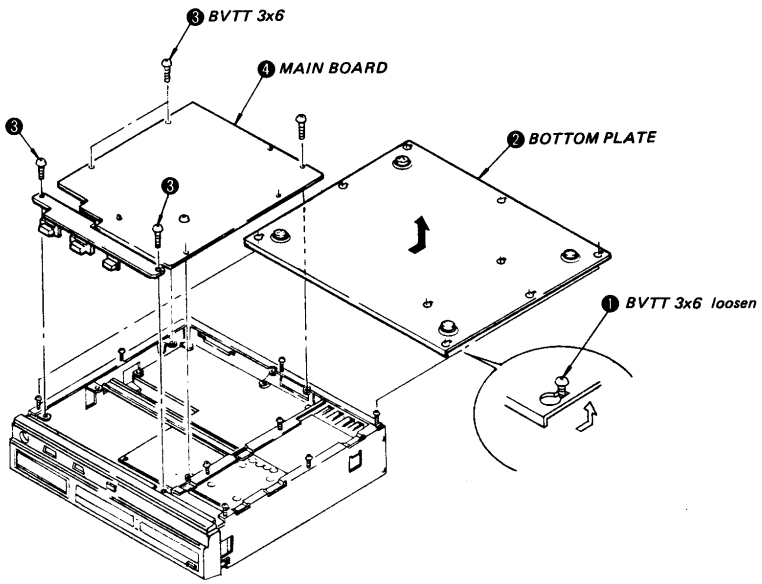

FDD UNIT (1/4)

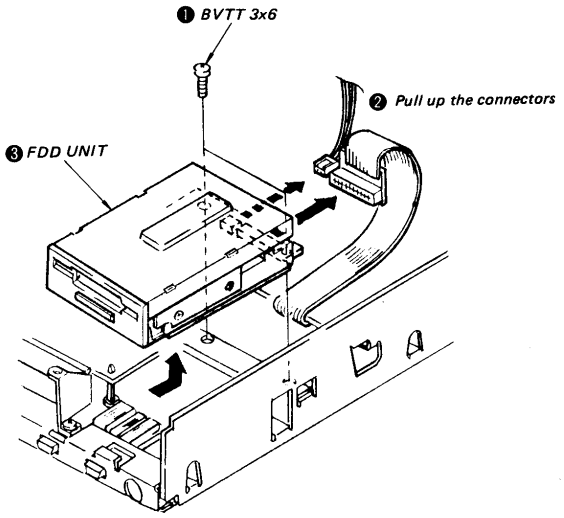

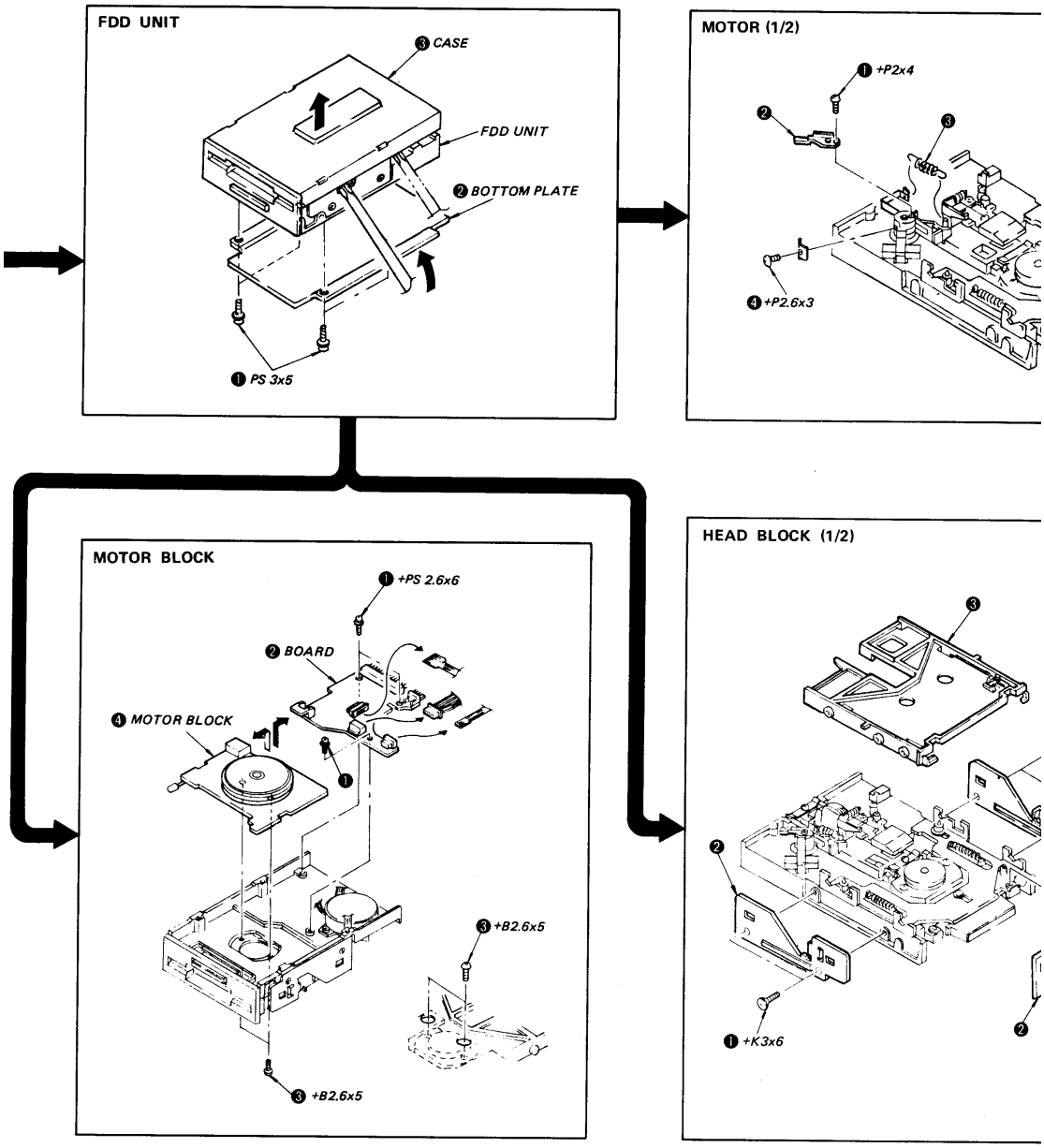
FDD UNIT
❸ CASE
FDD UNIT
❷ BOTTOM PLATE
❶ PS 3x5
MOTOR (1/2)
❶ +P2x4
❷
❸
❹ +P2.6x3
MOTOR BLOCK
❶ +PS 2.6x6
❷ BOARD
❹ MOTOR BLOCK
❶
❸ +B2.6x5
❸ +B2.6x5
HEAD BLOCK (1/2)
❸
❷
❶ +K3x6
❷

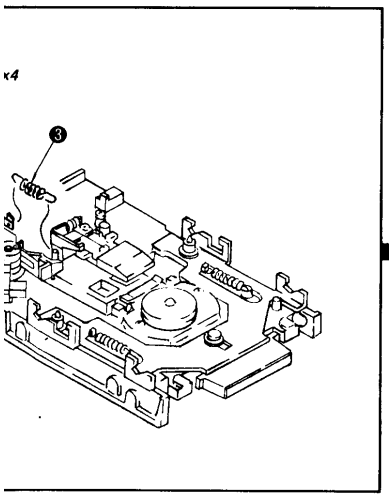
x4
❸

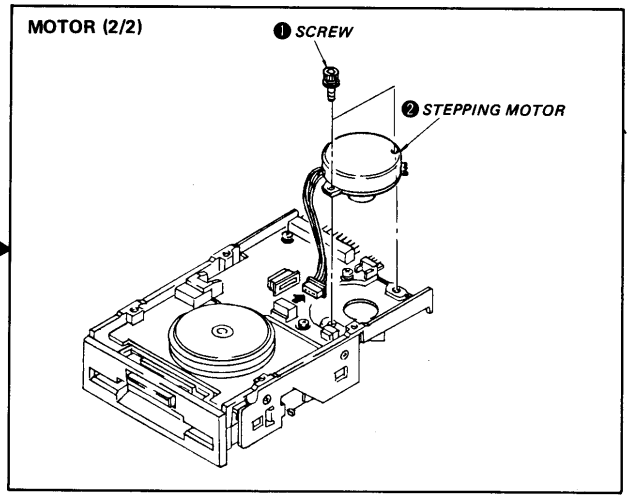
MOTOR (2/2)
❶ SCREW
❷ STEPPING MOTOR

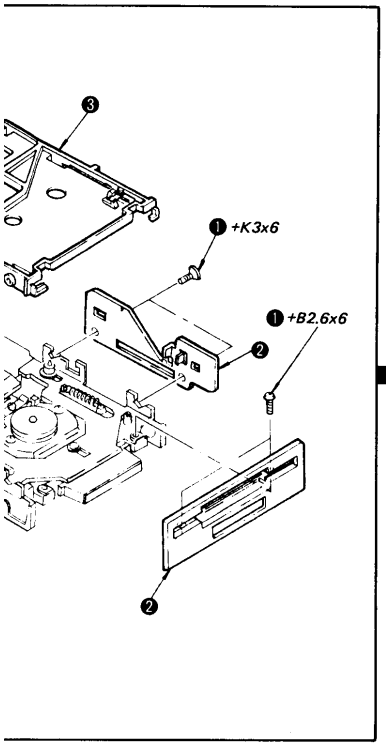
❸
❶ +K3x6
❶ +B2.6x6
❷
❷

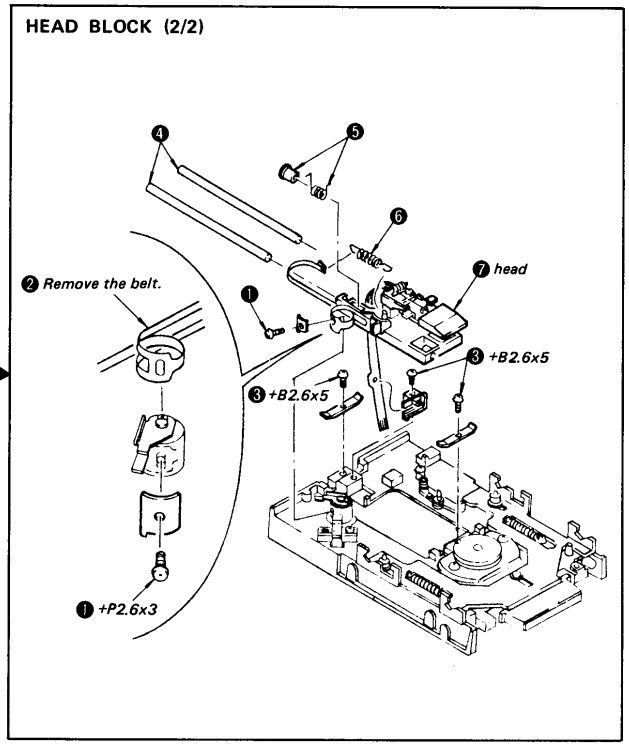
HEAD BLOCK (2/2)
❹
❺
❻
❼ head
❷ Remove the belt.
❶
❸ +B2.6x5
❸ +B2.6x5
❶ +P2.6x3

SECTION 5
ADJUSTMENTS

5-1. PREPARATION

5-1-1. Example of Adjusting Program (BASIC)

```
10  '*****************
20  '*               *
30  '* CHECK PROGRAM  *
40  '* for HB-F5/F500 *
50  '*               *
60  '*****************
70  CLS
80  PRINT;"Push any key?":PRINT
90  PRINT;"1.Push W key=RGB level adj."
100 PRINT;"2.Push S key=Timer Clock adj.(set)"
110 PRINT;"3.Push R key=Timer Clock adj.(reset)"
120 A$=INKEY$
130 IF A$="W" OR A$="w" THEN 170
140 IF A$="S" OR A$="s" THEN 190
150 IF A$="R" OR A$="r" THEN 230
160 GOTO 120
170 SCREEN 1:COLOR 15,15,15:'White
180 GOTO 120
190 SCREEN 1:COLOR 15,4,7:'MENU
200 OUT &HB4,14:OUT &HB5,0
210 OUT &HB4,15:OUT &HB5,8:'Timer Clock adj.(set)
220 GOTO 80
230 SCREEN 1:COLOR 15,4,7:'MENU
240 OUT &HB5,12:'Timer Clock adj.(reset)
250 GOTO 80
```

5-1-2. Use of Adjusting Program Example

When the program is run, the MENU display appears on the screen.

1. Press the W key.
   The whole screen display turns white.
   Used for the RGB level adjustment.
2. Press the S key.
   Used for the timer block adjustment.
   A 16 Hz frequency appears at IC11 through IC15.
3. Press the R key.
   Cancels the timer clock adjustment.

5-1-3. Connection

- Connect the KX-14CP1 RGB monitor to RGB connector CN309 or terminate the RGB output terminals (pins 6, 7, and 8) of CN309 in 75 ohms.

5-2. CPU CLOCK FREQUENCY ADJUSTMENT

Equipment Required: Frequency counter
Condition: Power ON
Check Point: IC301, pin 8/PUS-135 board
Specification: 3,579,540 Hz ~ 3,579,549 Hz
Adjustment: CV301/DUS-135

5-3. TIMER CLOCK FREQUENCY ADJUSTMENT

Connection: Connect 100k-ohm pull-up resistors between TP4 and +5 V dc.
Equipment Required: Frequency counter counter
Condition:
- Run the adjusting program and press the S key.
- After adjustment is completed, press the R key.

Check Point: TP4/PU-53 board
Specification: 15.9999 Hz ~ 16.0001 Hz
Adjustment: CV1/PU-53 board

5-4. RGB OUTPUT LEVEL ADJUSTMENT

5-4-1. R Level Adjustment

Equipment Required: Oscilloscope
Condition:
- Run the adjusting program and press the W key.
- After adjustment is completed, press the R key.

Check Point: CN309, pin 6/DUS-135 board
Specification: A = 0.7 V ± 0.02 V

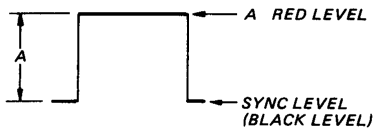

Adjustment: RV302/DUS-135 board

5-4-2. B Level Adjustment

Equipment Required: Oscilloscope
Condition:
- Run the adjusting program and press the W key.
- After adjustment is completed, press the R key.

Check Point: CN309, pin 8/DUS-135 board
Specification: A = 0.7 V ± 0.02 V

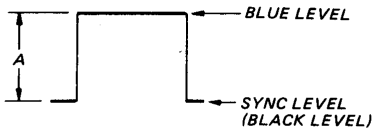

Adjustment: RV301/DUS-135 board

5-4-3. G Level Adjustment

Equipment Required: Oscilloscope
Condition: • Run the adjusting program and press the W key.
• After adjustment is completed, press the R key.
Check Point: CN309, pin 7/DUS-135 board
Specicification: A = 0.7 V ± 0.02 V

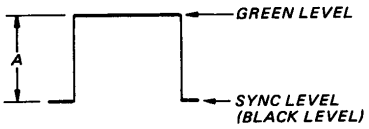

Adjustment: RV303/DUS-135 board

5-5. FDC ADJUSTMENT

5-5-1. VCO Frequency Adjustment

Equipment Required: Frequency counter
Condition: Three minutes after the power is turned on, connect TP1 to ground using a jumper wire.
Check Point: TP3/PU-53 board

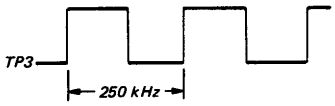

Specification: 250 kHz ± 1 kHz
Adjustment: RV2/PU-53 board
Note: After adjustment is completed, remove the jumper wire.

5-5-2. Read Pulse Width Adjustment

Equipment Required: Oscilloscope
Condition: Three minutes after the power is turned on, connect TP1 to ground using a jumper wire.
Check Point: TP2/PU-53 board

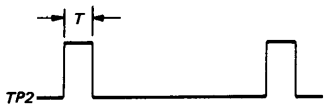

Specification: T = 0.5 μsec ± 10 nsec
Adjustment: RV1/PU-53 board
Note: After adjustment is completed, remove the jumper wire.

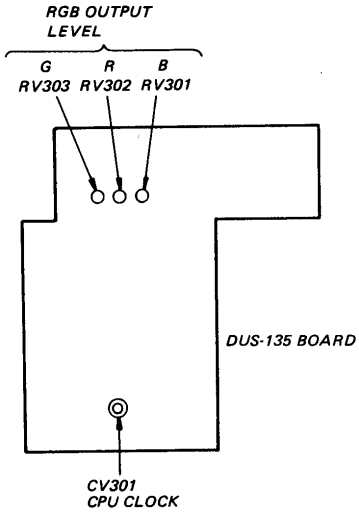

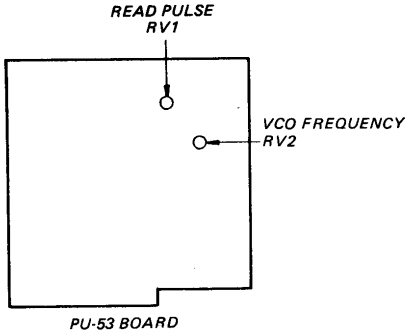

FDD UNIT ADJUSTMENT

Connection of Micro Floppydisk Checker with Disk Drive Unit

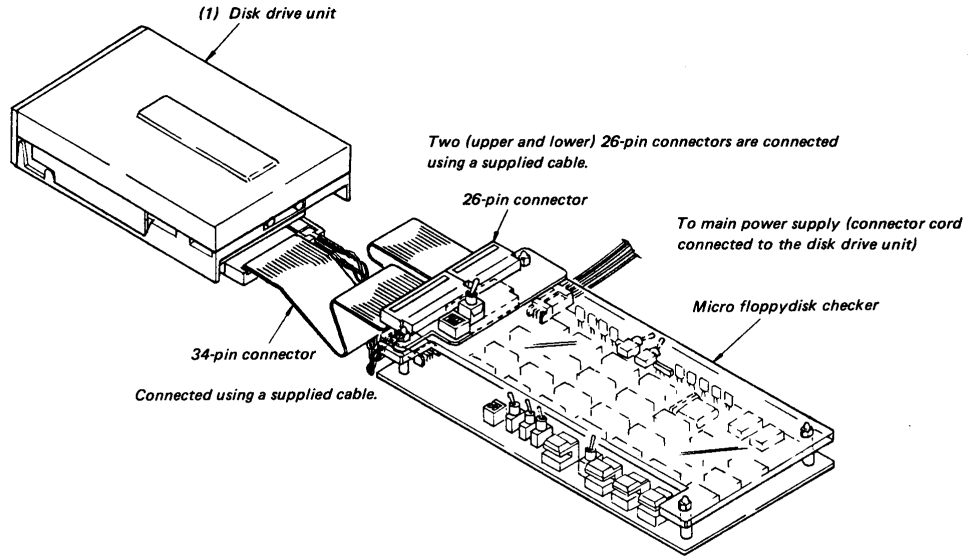

Initialization

- Set the DIP switch on the disk drive unit to 0 (refer to Fig. A).
- Micro floppydisk checker II

RPM	: 300
Track	: 80
SW102	: Upper position
SW102	: Upper position
SW101	: Only switch 1 is set to on.
Drive select switch	: Both switches 1 and 2 are set to the lower position.
Side select switch	: 0
Motor ON switch	: OFF
HD load switch	: OFF

After initialization is completed, check the following operations:

1. When the power is turned on, the WRTPRT LED indicator lights.
2. When the STEP OUT switch is pressed continuously, the head moves in the outer circumference direction until it arrives at track 00. When the head arrives at track 00, the TRK00 LED indicator lights.
3. When the STEP IN switch is pressed continuously, the head moves in the inner circumference direction until it arrives at track 79.
4. When the motor ON switch is turned on with a 50 auto S disk inserted, the motor rotates and the index LED indicator blinks.
   The RDY LED indicator lights approximately 1.5 seconds after the motor ON switch is turned on.

Index Positioning Precision Adjustment

1. Connect CH-1 on an oscilloscope to the test point (P) of the disk drive unit.
2. Connect CH-2 on an oscilloscope to the test point (N) of the disk drive unit.
3. Connect CH-3 on an oscilloscope to TP5 (index) of micro floppydisk checker II to use CH-3 as a trigger.
4. Insert a 50 auto S disk (OR-D163VA) and move the head to track 40.
5. Set CH-1 and CH-2 on an oscilloscope to the ADD mode.
6. Loosen the stepping motor setscrews using a hexagonal head wrench (2mm) and move the stepping motor adjusting teeth using a screwdriver so that the ratio of amplitude A to B is one as shown in the illustration below.
7. Check that amplitude A is equal to B by setting the side select switch to 0 and 1.
8. Move the head to track 79 by setting the side select switch to 0 and check that amplitudes A and B are equal. If not, repeat Steps 6, 7, and 8.

Specifications:

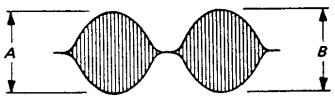

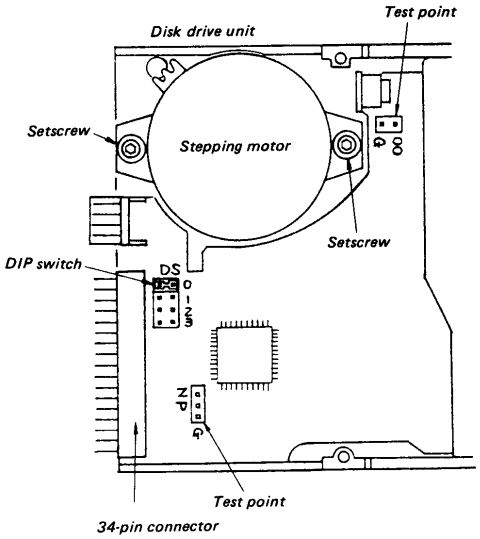

00 Sensor Adjustment

1. Connect an oscilloscope to the test point (00) of the disk drive unit.
2. Move the head to track 00, track 01, track 02 in sequence.
3. In this case, the waveforms appearing on the oscilloscope are as follows:
   Track 00: "H"
   Track 01: "L"
   Track 02: "L"
   Track 03: "L"

   Loosen and adjust the 00 sensor assembly setscrew so that the signal waveform goes high only at track 00.

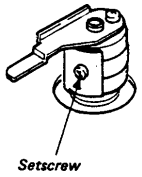

MOUNTING DIAGRAM — *mouse section* —
— *Conductor Side* —

SECTION 6
DIAGRAMS

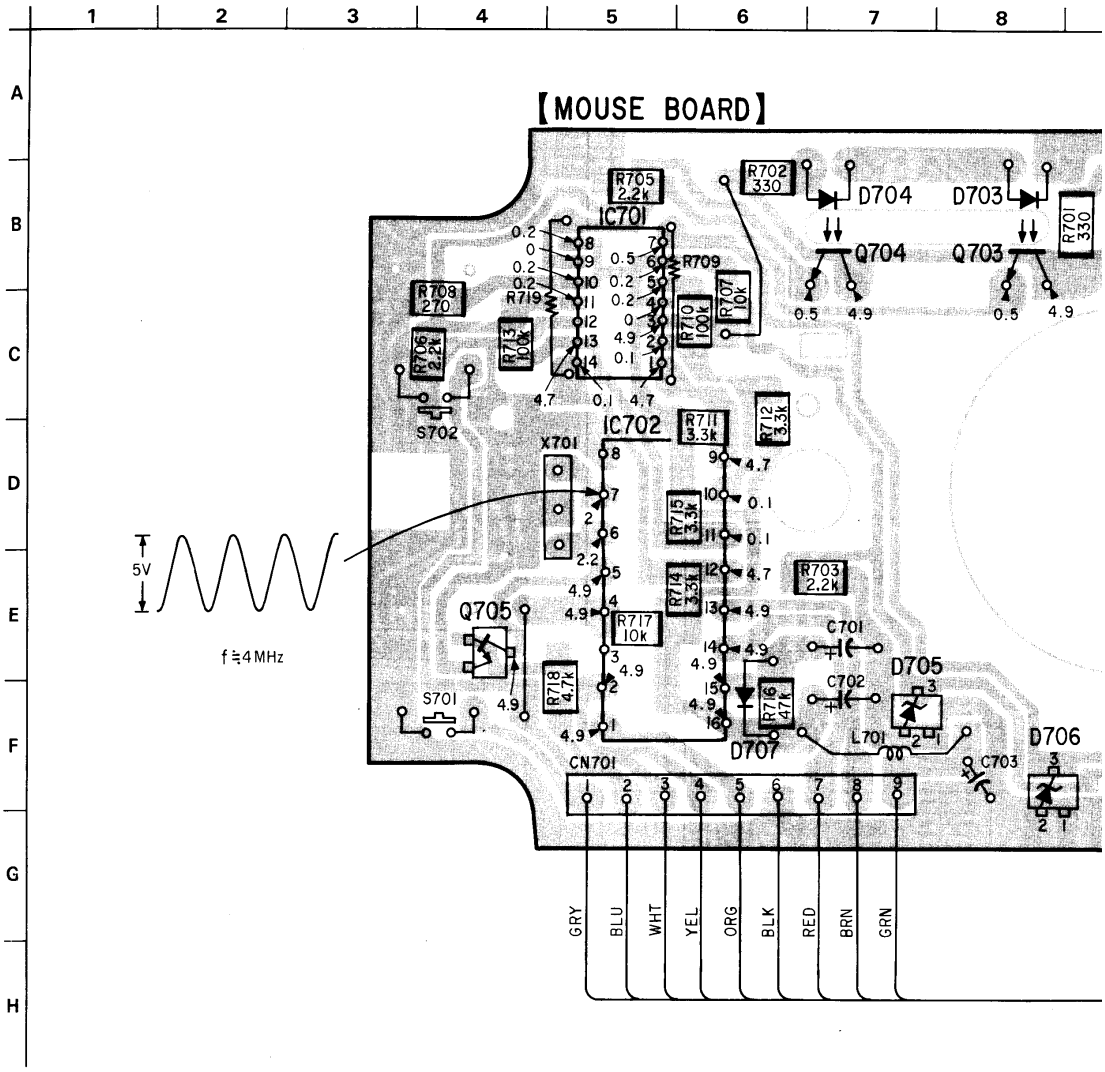

SCHEMATIC DIAGRAM — *mouse section* —

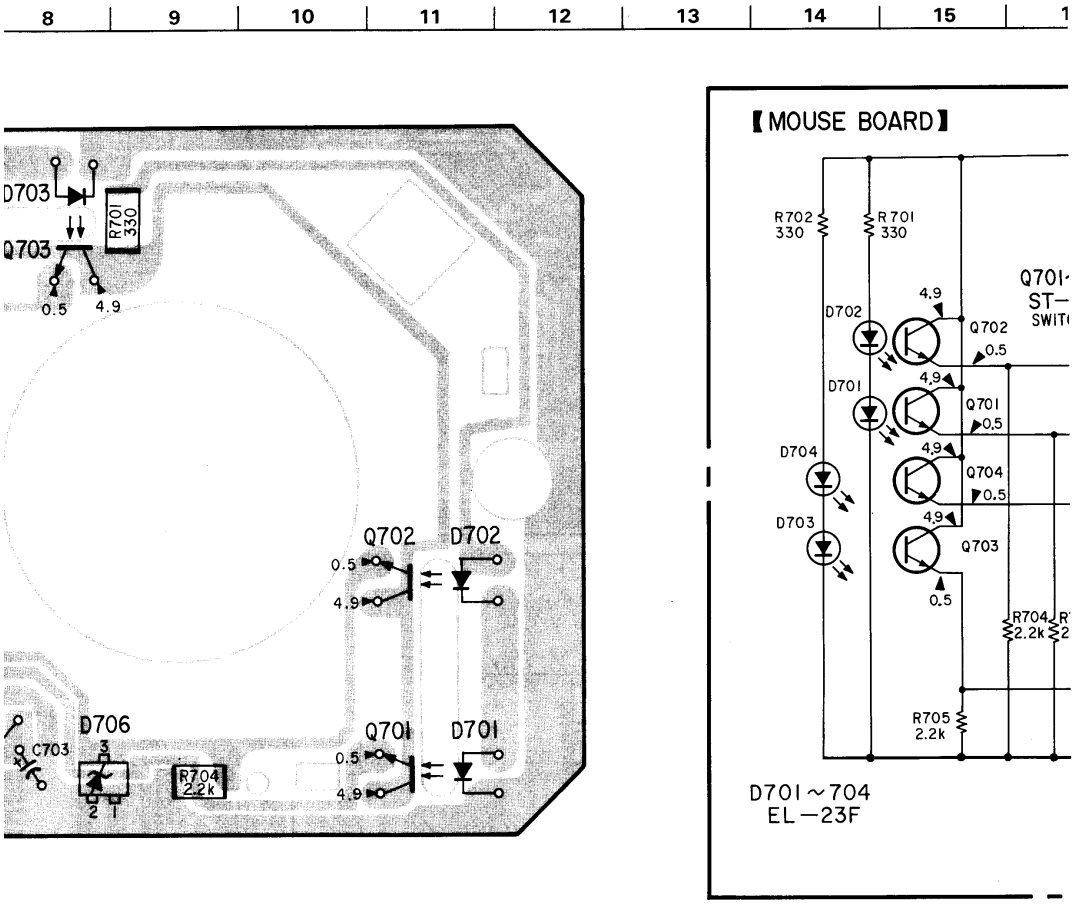

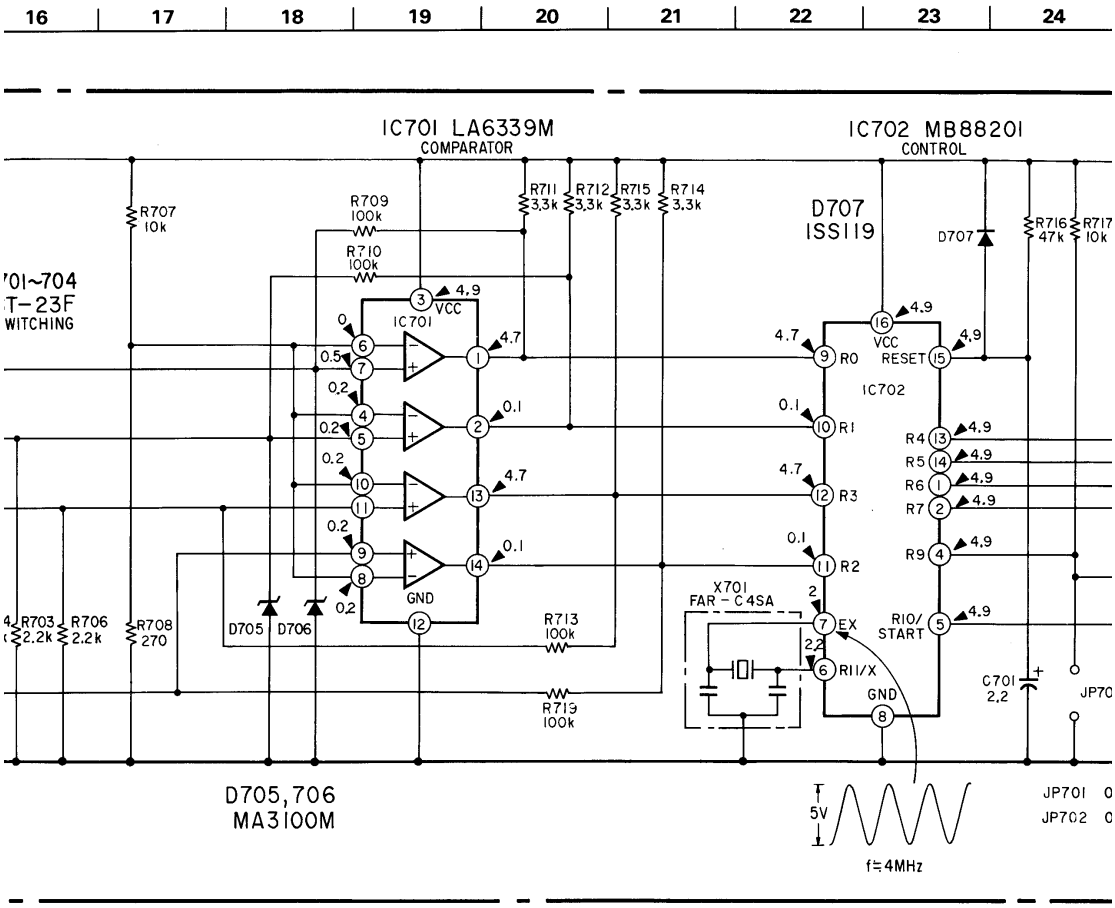
16
17
18
19
20
21
22
23
24
IC701 LA6339M
COMPARATOR
IC702 MB8820I
CONTROL
R707
10k
R709
100k
R710
100k
R711
3.3k
R712
3.3k
R715
3.3k
R714
3.3k
D707
ISS119
D707
R716
47k
R717
10k
'01~704
:T-23F
WITCHING
IC701
VCC
GND
IC702
VCC
RESET
R0
R1
R3
R2
EX
R11/X
GND
R10/
START
R4
R5
R6
R7
R9
R703
2.2k
R706
2.2k
R708
270
D705
D706
R713
100k
R719
100k
X701
FAR-C4SA
C701
2.2
JP70
D705,706
MA3100M
5V
f≒4MHz
JP701
JP702

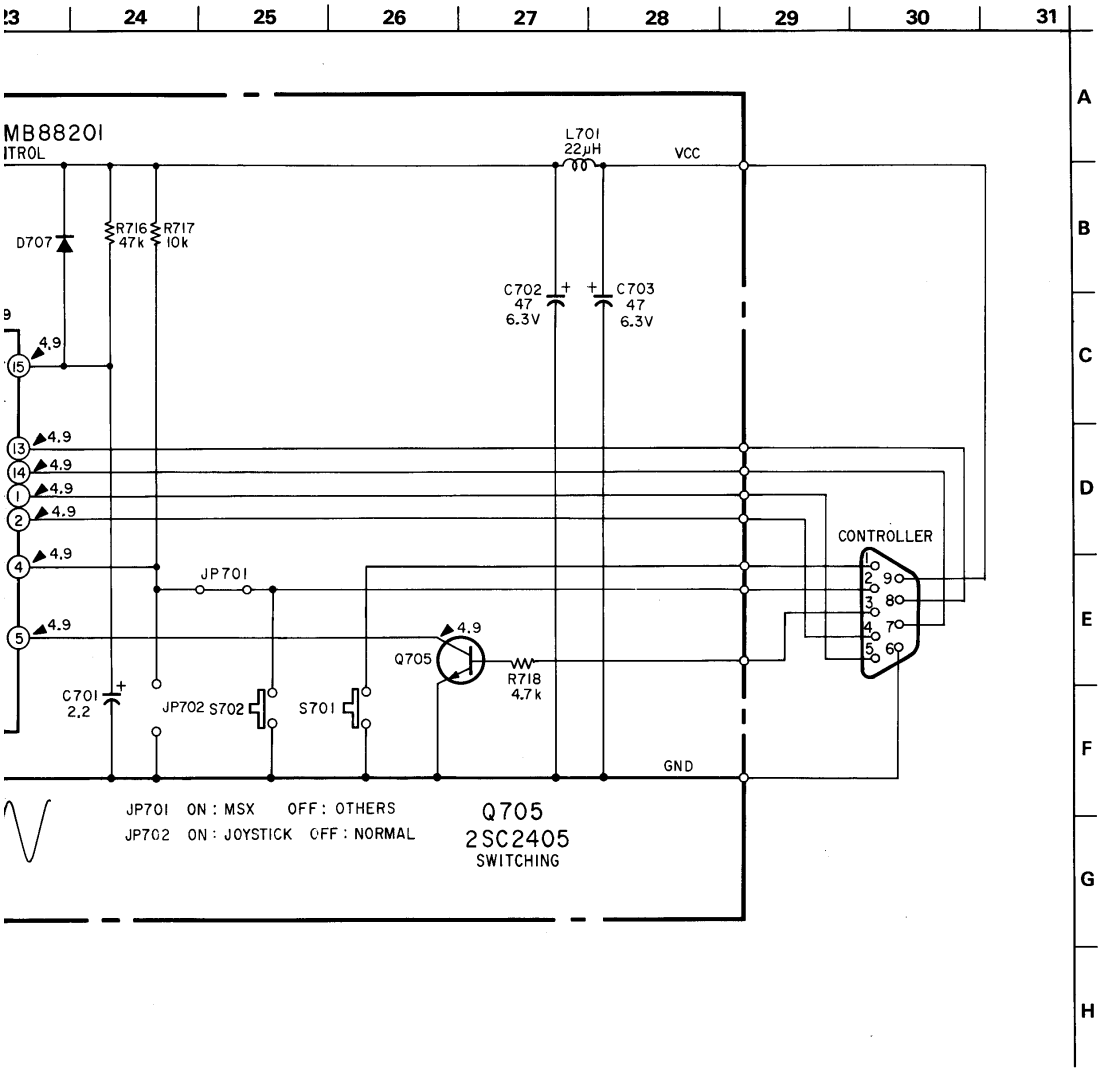
23
24
25
26
27
28
29
30
31
A
B
C
D
E
F
G
H
MB88201
ITROL
L701
22μH
VCC
D707
R716
47k
R717
10k
C702
47
6.3V
C703
47
6.3V
4.9
15
13
14
1
2
4
5
JP701
CONTROLLER
Q705
R718
4.7k
C701
2.2
JP702
S702
S701
GND
JP701 ON : MSX OFF : OTHERS
JP702 ON : JOYSTICK OFF : NORMAL
Q705
2SC2405
SWITCHING

●SEMICONDUCTOR LOCATION

Ref.No.	Location	Ref.No.	Location
D1	F-15	IC301	H-25
D2	D-10	IC302	H-27
D3	C-12	IC303	H-27
D4	E-14	IC304	G-27
D5	D-16	IC305	G-27
D6	H-5	IC306	C-21
D7	D-14	IC307	C-27
D301	B-21	IC901	A-31
D302	B-22	IC902	A-30
D303	B-22	IC903	C-31
D304	D-19		
D901	D-31		
D902	E-31		
D903	E-31		
D904	D-30		
D905	K-29		
IC1	F-8	Q1	F-16
IC2	G-7	Q301	F-24
IC3	G-10	Q302	E-24
IC4	H-10	Q303	D-24
IC5	J-11	Q304	D-25
IC6	J-13	Q305	D-25
IC7	J-14	Q306	D-26
IC8	J-15	Q307	D-24
IC9	J-16	Q308	D-24
IC00	I-15	Q309	D-25
IC11	I-16	Q310	D-26
IC12	H-8	Q311	D-27
IC13	I-8	Q312	C-21
IC14	I-9	Q313	E-19
IC15	H-11	Q314	E-20
IC16	H-13		
IC17	H-14		
IC18	I-15		
IC19	I-16		
IC20	I-7		
IC21	H-9		
IC22	G-13		
IC23	H-15		
IC24	H-16		
IC25	E-9		
IC26	F-15		
IC27	F-16		
IC28	B-9		
IC29	B-10		
IC30	C-13		
IC31	C-14		
IC32	D-15		
IC33	E-16		
IC34	D-17		
IC35	B-16		

MOUNTING DIAGRAMS *– main section –*

– Conductor Side –

● See page 59 for note.
● See page 65 for Semiconductor lead layouts.

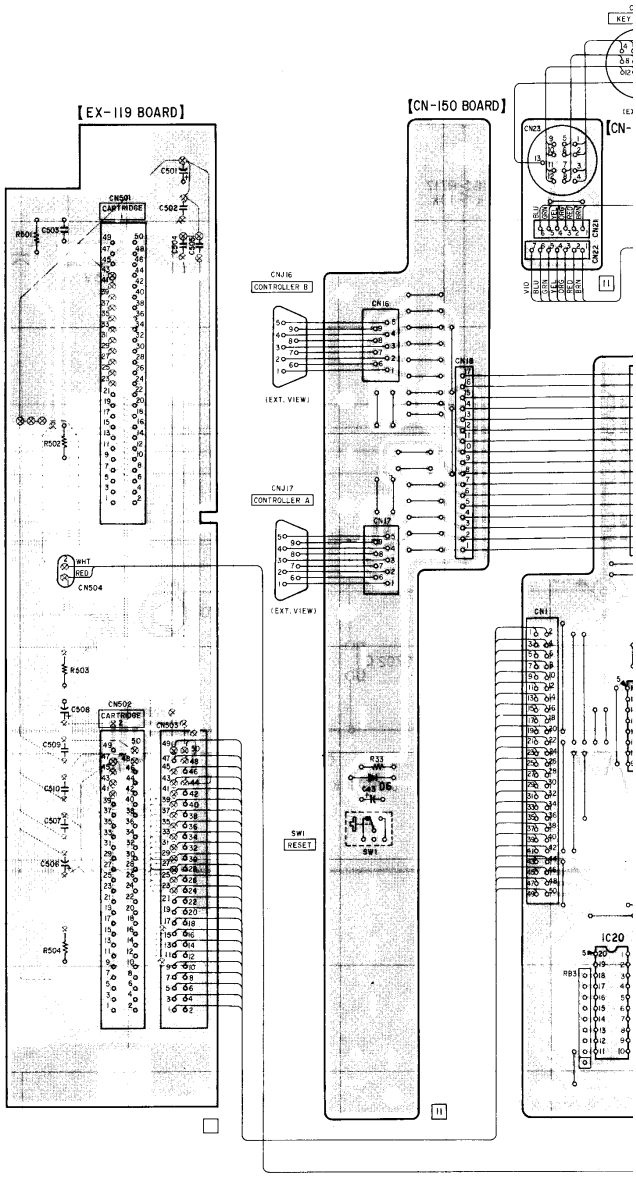

:tor lead layouts.

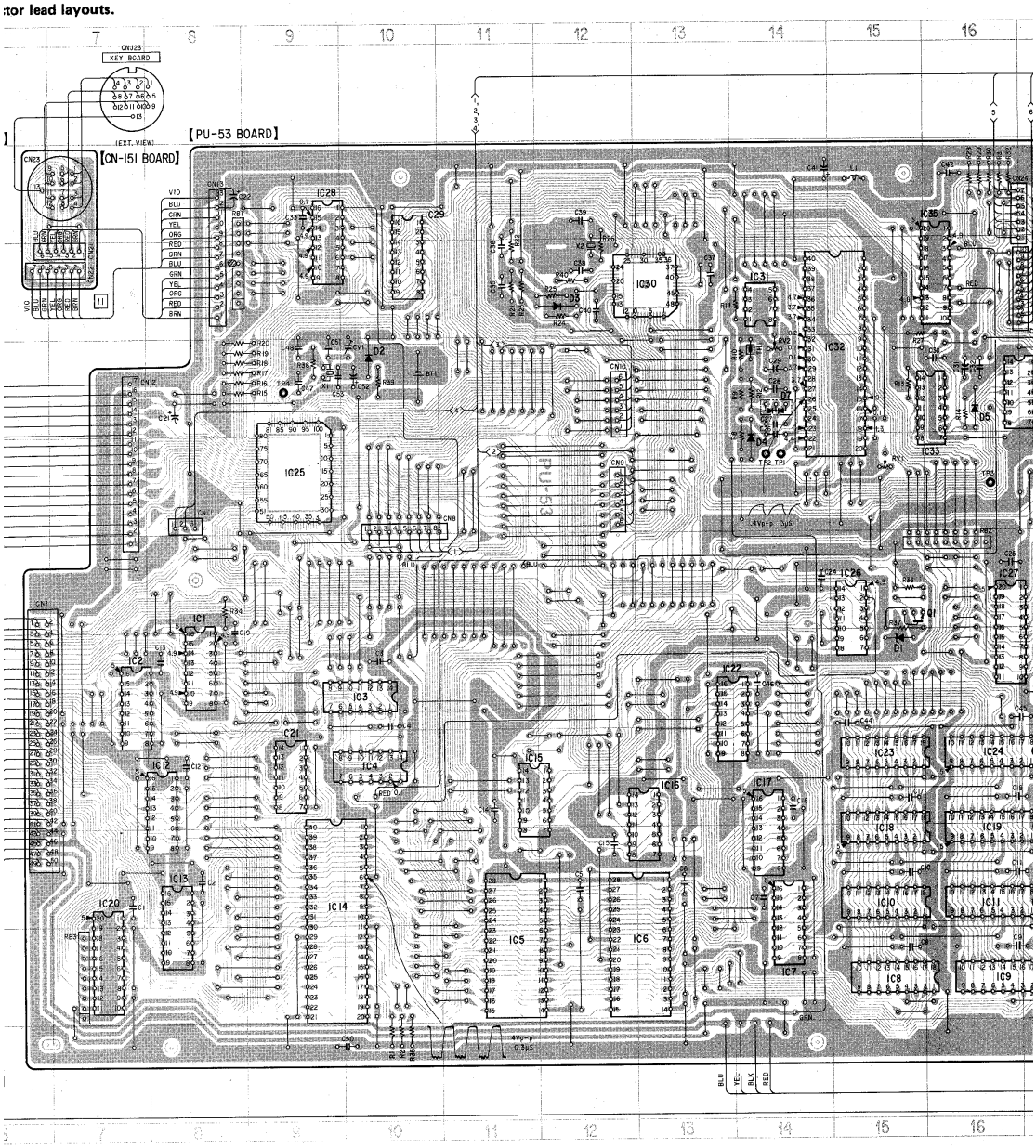

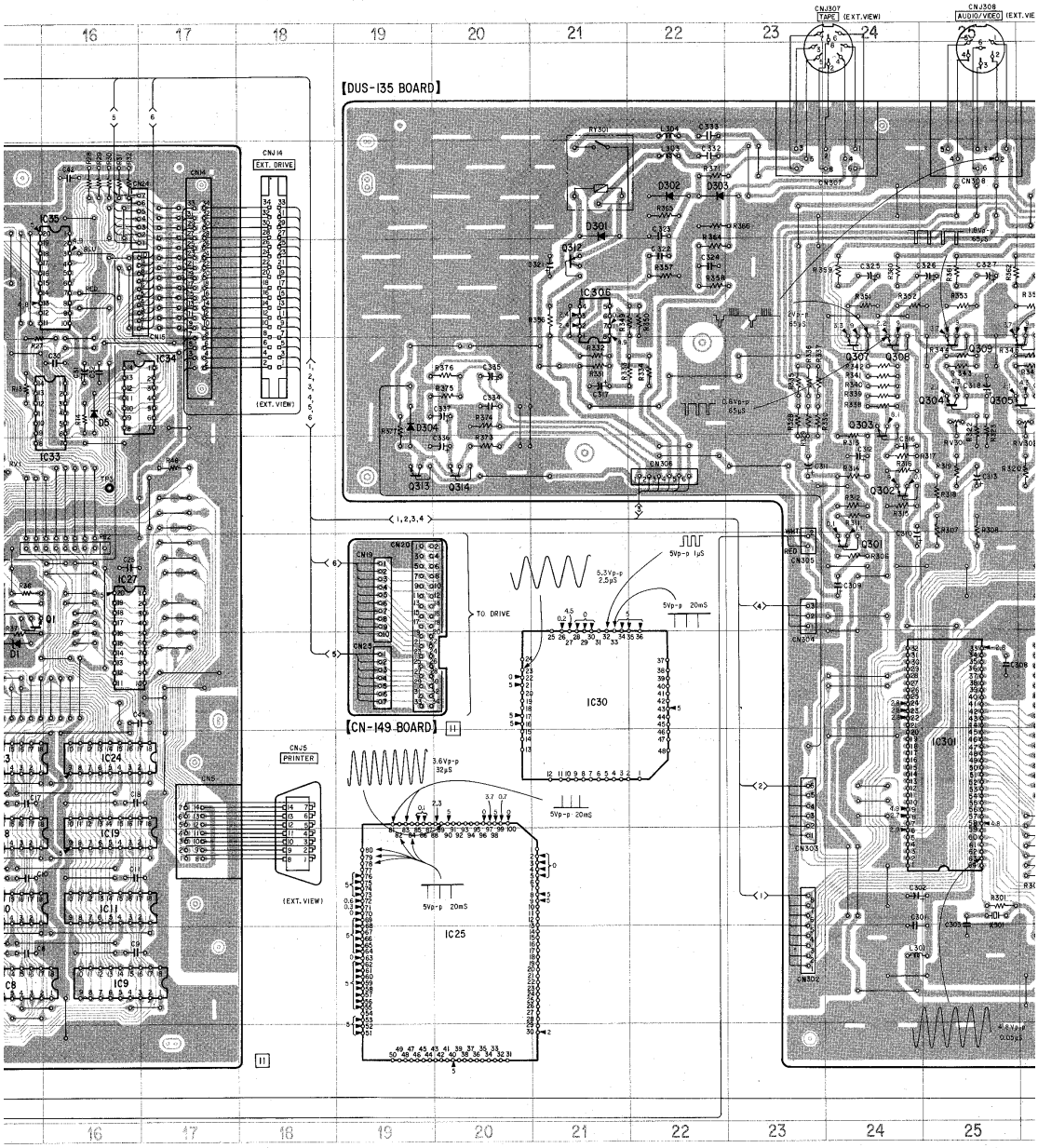
[DUS-135 BOARD]
[CN-149 BOARD]
CNJ307 TAPE (EXT. VIEW)
CNJ308 AUDIO/VIDEO
CNJ4 EXT. DRIVE
CNJ5 PRINTER
TO DRIVE
IC30
IC25
IC27
IC24
IC19
IC11
IC9
IC33
IC34
IC305
Q301
Q302
Q303
Q304
Q307
Q308
Q309
Q313
Q314
5Vp-p 1μS
5Vp-p 20mS
5.3Vp-p 2.5μS
3.6Vp-p 32μS
0.6Vp-p 85μS

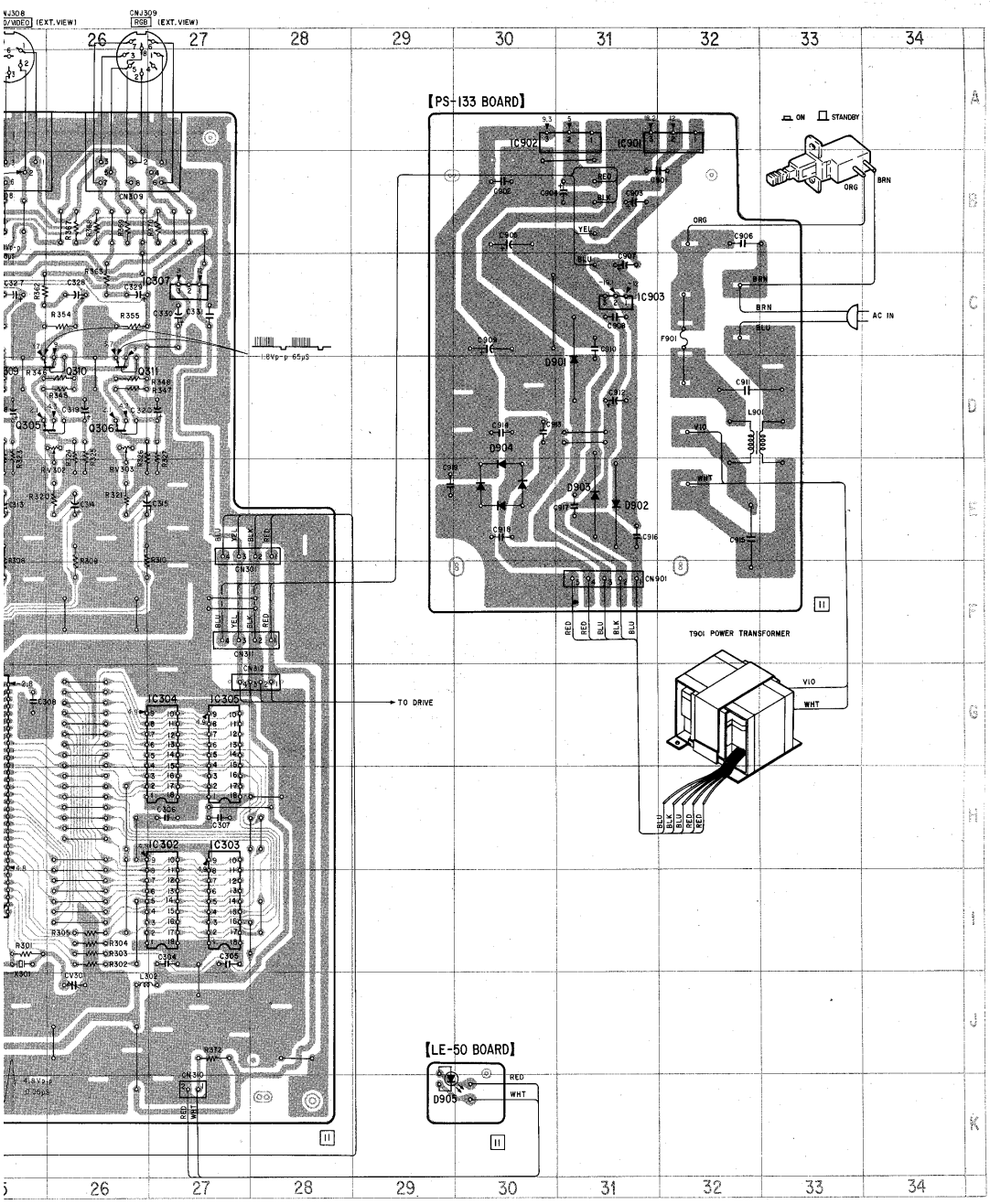
CNJ308
VIDEO (EXT. VIEW)
CNJ309
RGB (EXT. VIEW)
【PS-133 BOARD】
ON
STANDBY
AC IN
T901 POWER TRANSFORMER
TO DRIVE
【LE-50 BOARD】
D905
RED
WHT

SCHEMATIC DIAGRAM *– main section –* • **See page 59 for note.**

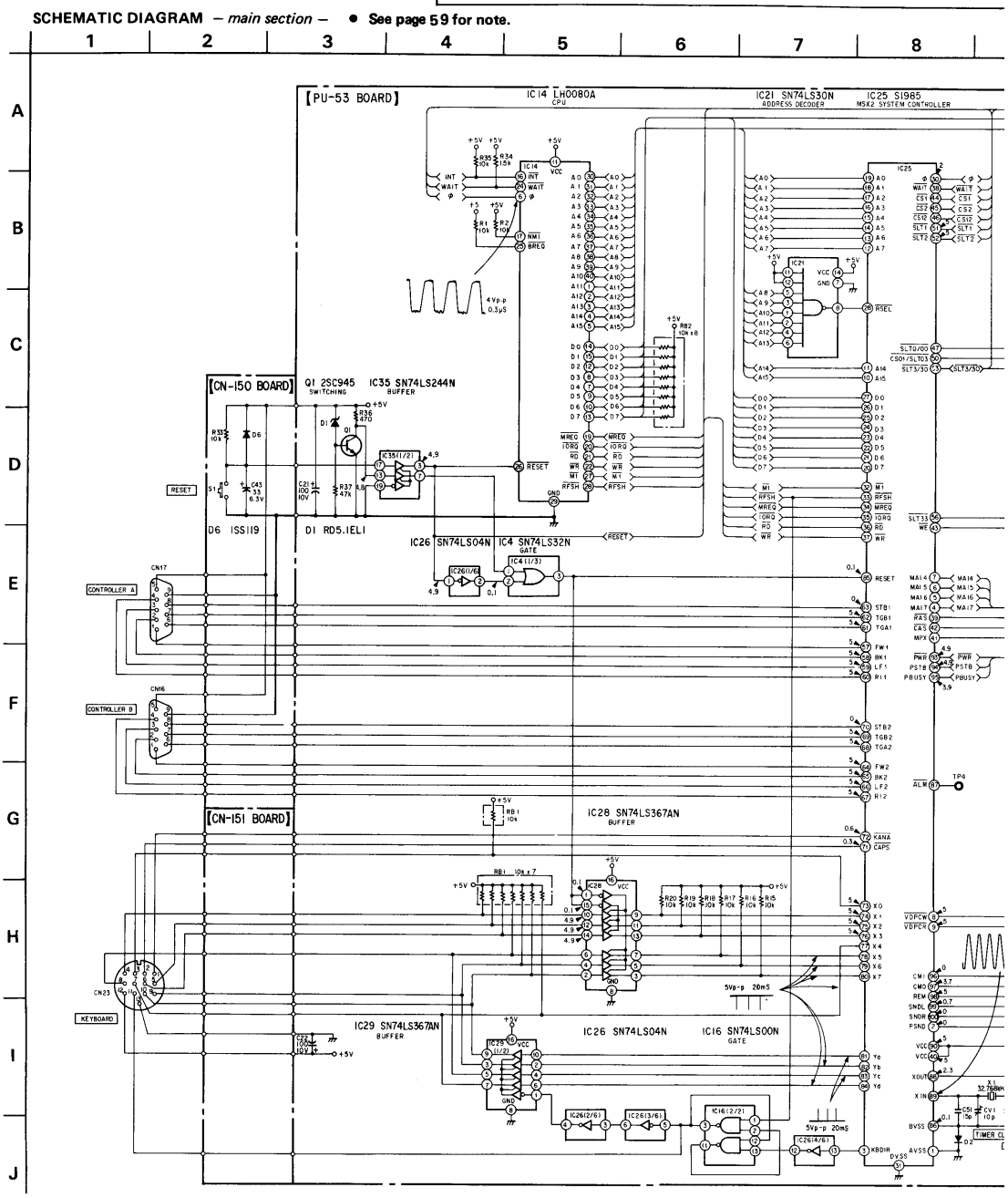

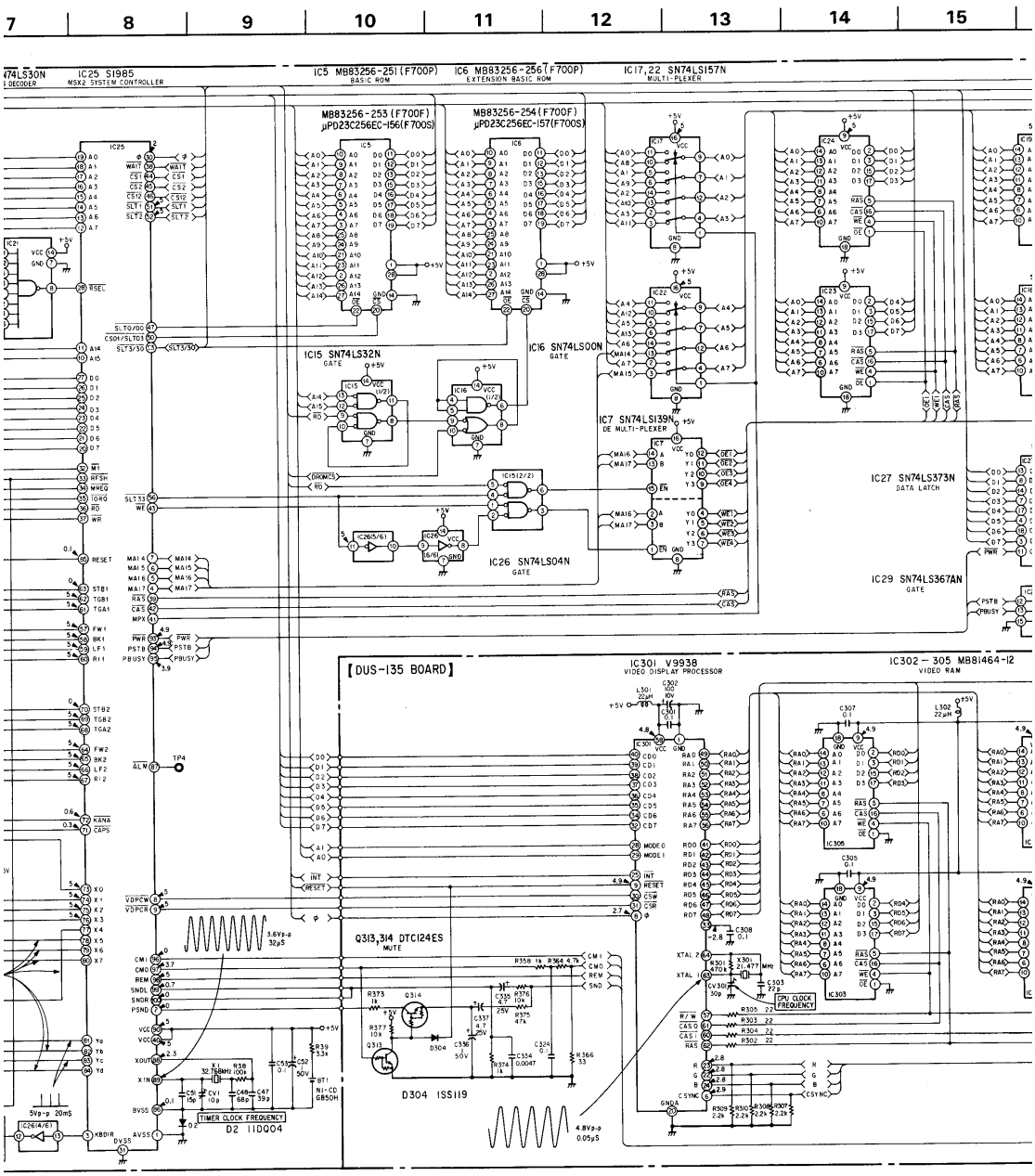
7
8
9
10
11
12
13
14
15
IC25 SI985
MSX2 SYSTEM CONTROLLER
IC5 MB83256-251(F700P)
BASIC ROM
IC6 MB83256-256(F700P)
EXTENSION BASIC ROM
IC17,22 SN74LS157N
MULTI-PLEXER
MB83256-253(F700F)
μPD23C256EC-156(F700S)
MB83256-254(F700F)
μPD23C256EC-157(F700S)
IC15 SN74LS32N
GATE
IC16 SN74LS00N
GATE
IC7 SN74LS139N
DE MULTI-PLEXER
IC27 SN74LS373N
DATA LATCH
IC26 SN74LS04N
GATE
IC29 SN74LS367AN
GATE
【DUS-135 BOARD】
IC301 V9938
VIDEO DISPLAY PROCESSOR
IC302-305 MB81464-12
VIDEO RAM
Q313,314 DTC124ES
MUTE
D304 1SS119
CPU CLOCK FREQUENCY
TIMER CLOCK FREQUENCY
D2 1ID004

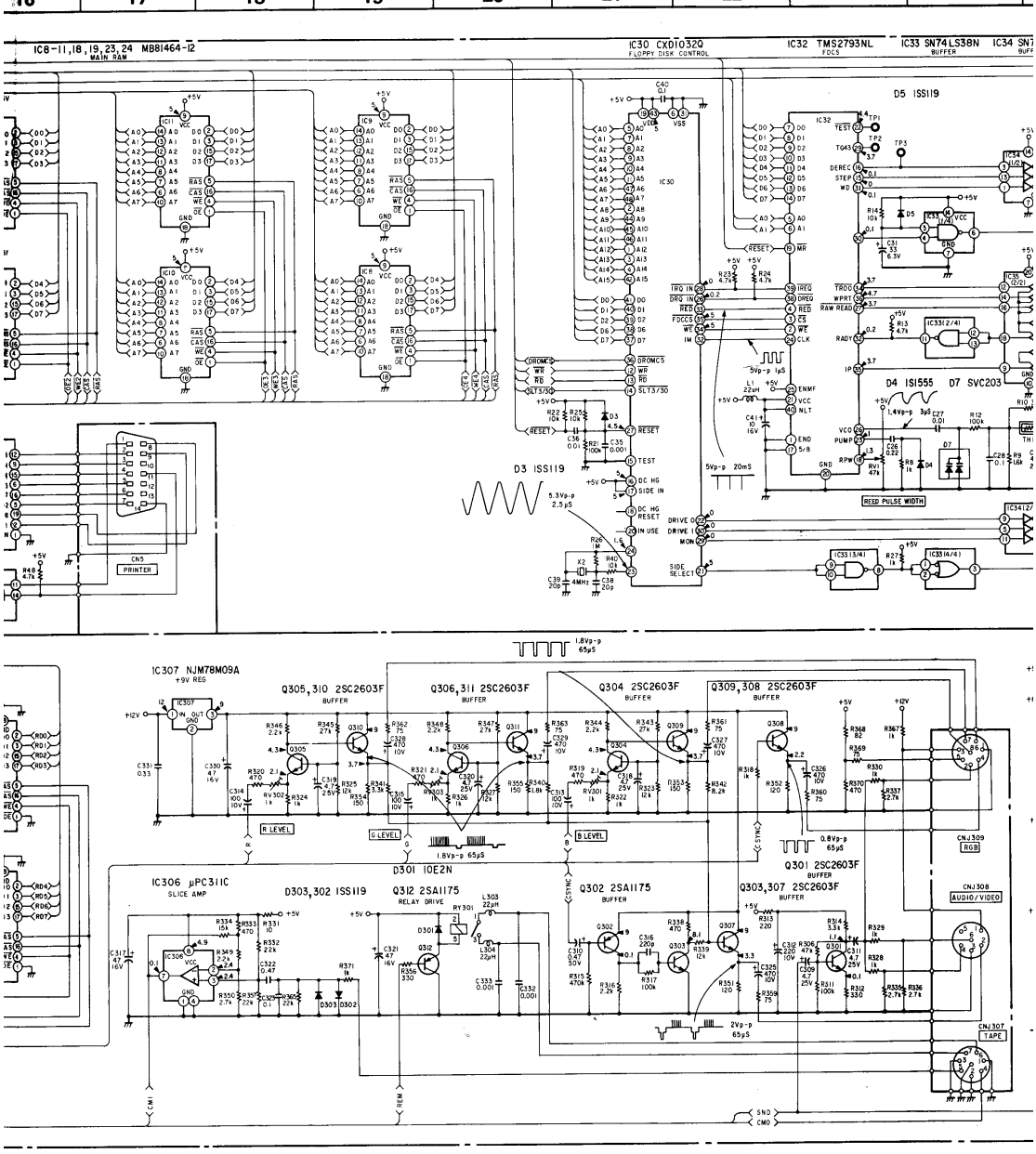
16
17
18
19
20
21
22
23
24
IC8-11,18,19,23,24 MB81464-12
MAIN RAM
IC30 CXD1032Q
FLOPPY DISK CONTROL
IC32 TMS2793NL
FDCS
IC33 SN74LS38N
BUFFER
D5 1SS119
D3 1SS119
D4 1S1555
D7 SVC203
REED PULSE WIDTH
CN5
PRINTER
IC307 NJM78M09A
+9V REG
Q305,310 2SC2603F
BUFFER
Q306,311 2SC2603F
BUFFER
Q304 2SC2603F
BUFFER
Q309,308 2SC2603F
BUFFER
R LEVEL
G LEVEL
B LEVEL
CNJ309
RGB
D301 10E2N
IC306 μPC311C
SLICE AMP
D303,302 1SS119
Q312 2SA1175
RELAY DRIVE
Q302 2SA1175
BUFFER
Q303,307 2SC2603F
BUFFER
Q301 2SC2603F
BUFFER
CNJ308
AUDIO/VIDEO
CNJ307
TAPE

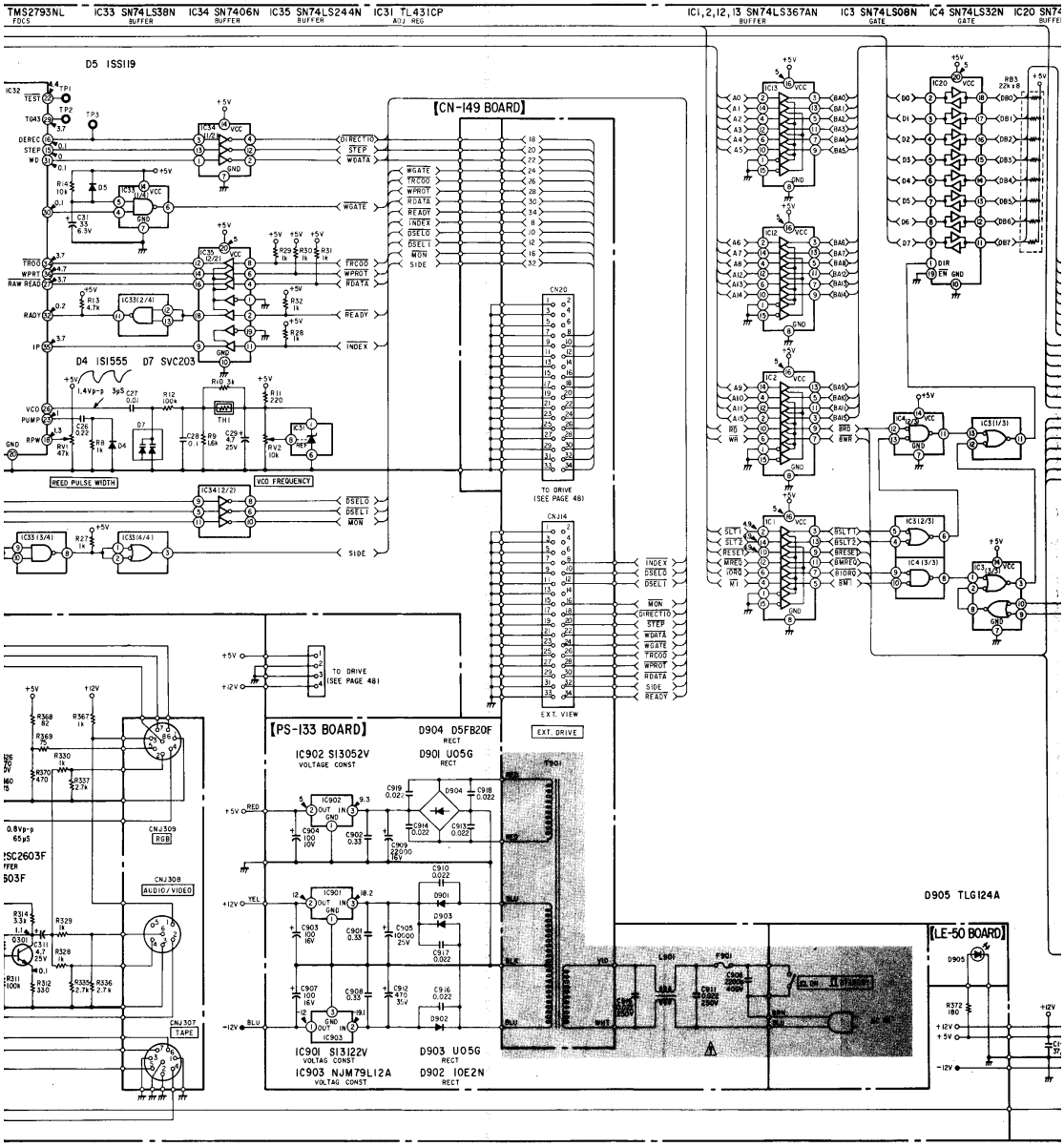
23
24
25
26
27
28
29
30
31
TMS2793NL FDCS
IC33 SN74LS38N BUFFER
IC34 SN7406N BUFFER
IC35 SN74LS244N BUFFER
IC31 TL431CP ADJ REG
IC1,2,12,13 SN74LS367AN BUFFER
IC3 SN74LS08N GATE
IC4 SN74LS32N GATE
D5 1SS119
D4 1S1555
D7 SVC203
[CN-149 BOARD]
CN20
TO DRIVE (SEE PAGE 48)
CNJ14
EXT. VIEW
EXT. DRIVE
REED PULSE WIDTH
VCO FREQUENCY
[PS-133 BOARD]
D904 D5FB20F RECT
IC902 S13052V VOLTAGE CONST
D901 U05G RECT
IC901 S13122V VOLTAG CONST
IC903 NJM79L12A VOLTAG CONST
D903 U05G RECT
D902 10E2N RECT
D905 TLG124A
[LE-50 BOARD]
CNJ309 RGB
CNJ308 AUDIO/VIDEO
CNJ307 TAPE

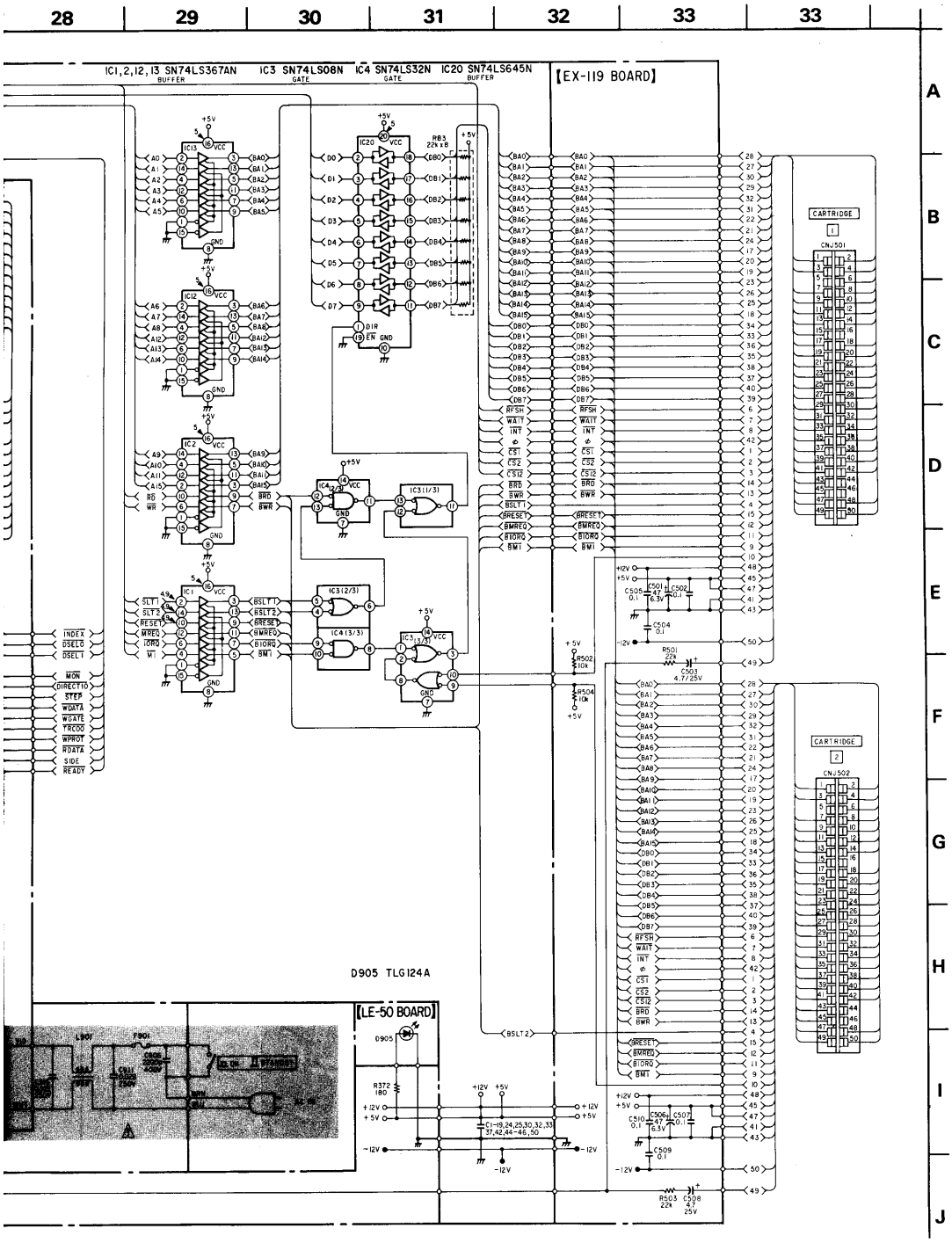
28
29
30
31
32
33
33
IC1,2,12,13 SN74LS367AN BUFFER
IC3 SN74LS08N GATE
IC4 SN74LS32N GATE
IC20 SN74LS645N BUFFER
[EX-119 BOARD]
CARTRIDGE 1
CN501
CARTRIDGE 2
CN502
D905 TLG124A
[LE-50 BOARD]
INDEX
DSEL0
DSEL1
MON
DIRECT10
STEP
WDATA
WGATE
TRC00
WPROT
RDATA
SIDE
READY

MOUNTING DIAGRAMS *– main section –*

– Conductor Side –

● See page 59 for note.
● See page 65 for Semiconductor lead la

●SEMICONDUCTOR LOCATION

Ref.No.	Location	Ref.No.	Location
D1	F-15	IC301	H-25
D2	D-10	IC302	H-27
D3	C-12	IC303	H-27
D4	E-14	IC304	G-27
D5	D-16	IC305	G-27
D6	H-5	IC306	C-21
D7	D-14	IC307	C-27
D301	B-21	IC901	A-31
D302	B-22	IC902	A-30
D303	B-22	IC903	C-31
D304	D-19		
D901	D-31		
D902	E-31		
D903	E-31		
D904	D-30		
D905	K-29		
IC1	F-8	Q1	F-16
IC2	G-7	Q301	F-24
IC3	G-10	Q302	E-24
IC4	H-10	Q303	D-24
IC5	J-11	Q304	D-25
IC6	J-13	Q305	D-25
IC7	J-14	Q306	D-26
IC8	J-15	Q307	D-24
IC9	J-16	Q308	D-24
IC00	I-15	Q309	D-25
IC11	I-16	Q310	D-26
IC12	H-8	Q311	D-27
IC13	I-8	Q312	C-21
IC14	I-9	Q313	E-19
IC15	H-11	Q314	E-20
IC16	H-13		
IC17	H-14		
IC18	I-15		
IC19	I-16		
IC20	I-7		
IC21	H-9		
IC22	G-13		
IC23	H-15		
IC24	H-16		
IC25	E-9		
IC26	F-15		
IC27	F-16		
IC28	B-9		
IC29	B-10		
IC30	C-13		
IC31	C-14		
IC32	D-15		
IC33	E-16		
IC34	D-17		
IC35	B-16		

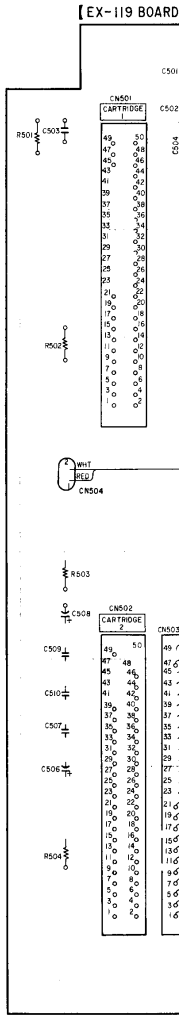

- See page 59 for note.
- See page 65 for Semiconductor lead layouts.

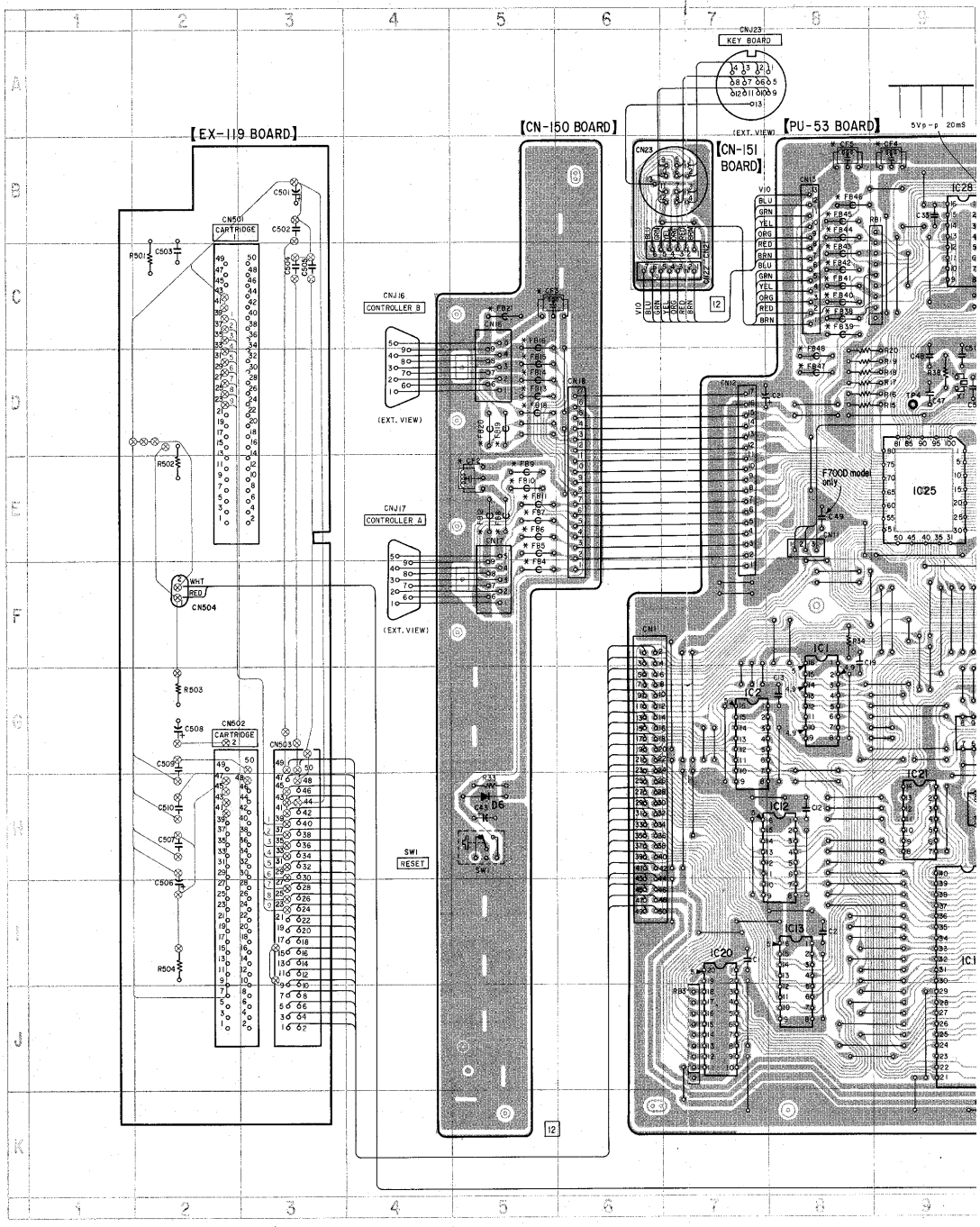

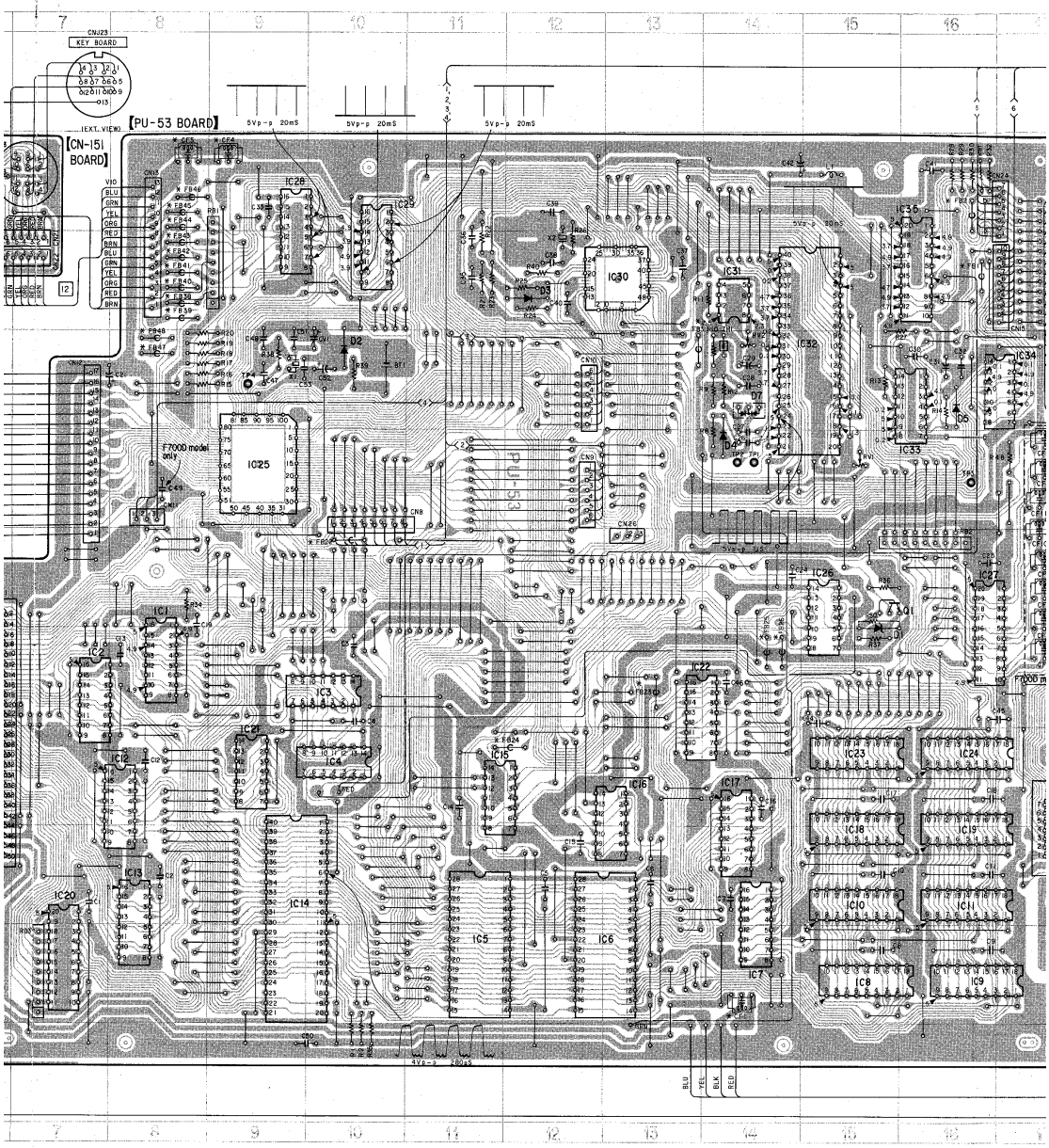
KEY BOARD
【PU-53 BOARD】
【CN-151 BOARD】
F700D model only
5Vp-p 20mS
4Vp-p 20mS

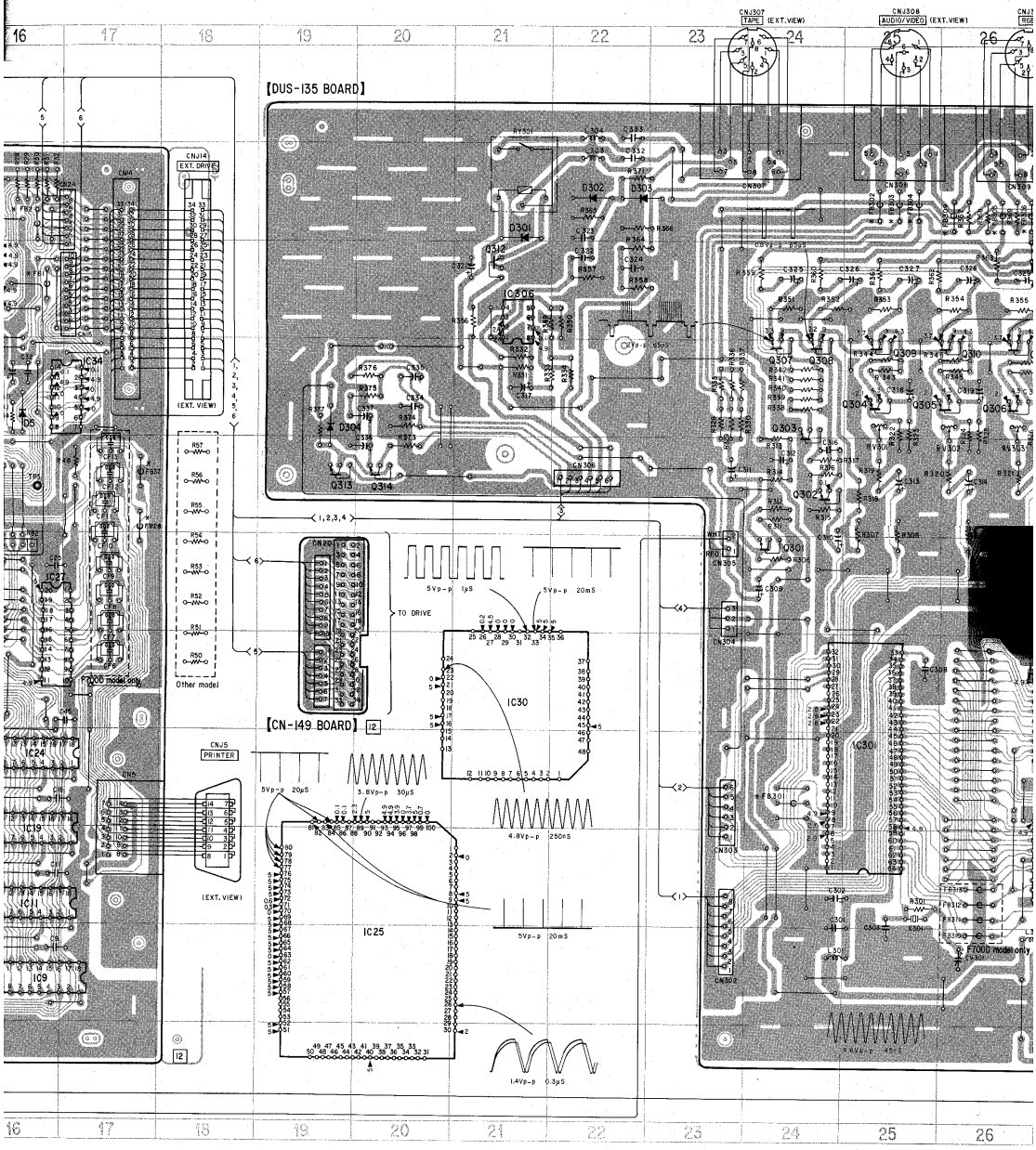
【DUS-135 BOARD】
【CN-149 BOARD】
CNJ307 TAPE (EXT.VIEW)
CNJ308 AUDIO/VIDEO (EXT.VIEW)
CNJ14 EXT. DRIVE
(EXT. VIEW)
Other model
F700D model only
CNJ5 PRINTER
TO DRIVE
IC30
IC25
IC34
IC27
IC24
IC19
IC11
IC9
IC6
IC31
5Vp-p 1μS
5Vp-p 20mS
5Vp-p 20μS
3.8Vp-p 30μS
4.8Vp-p 250nS
1.4Vp-p 0.3μS

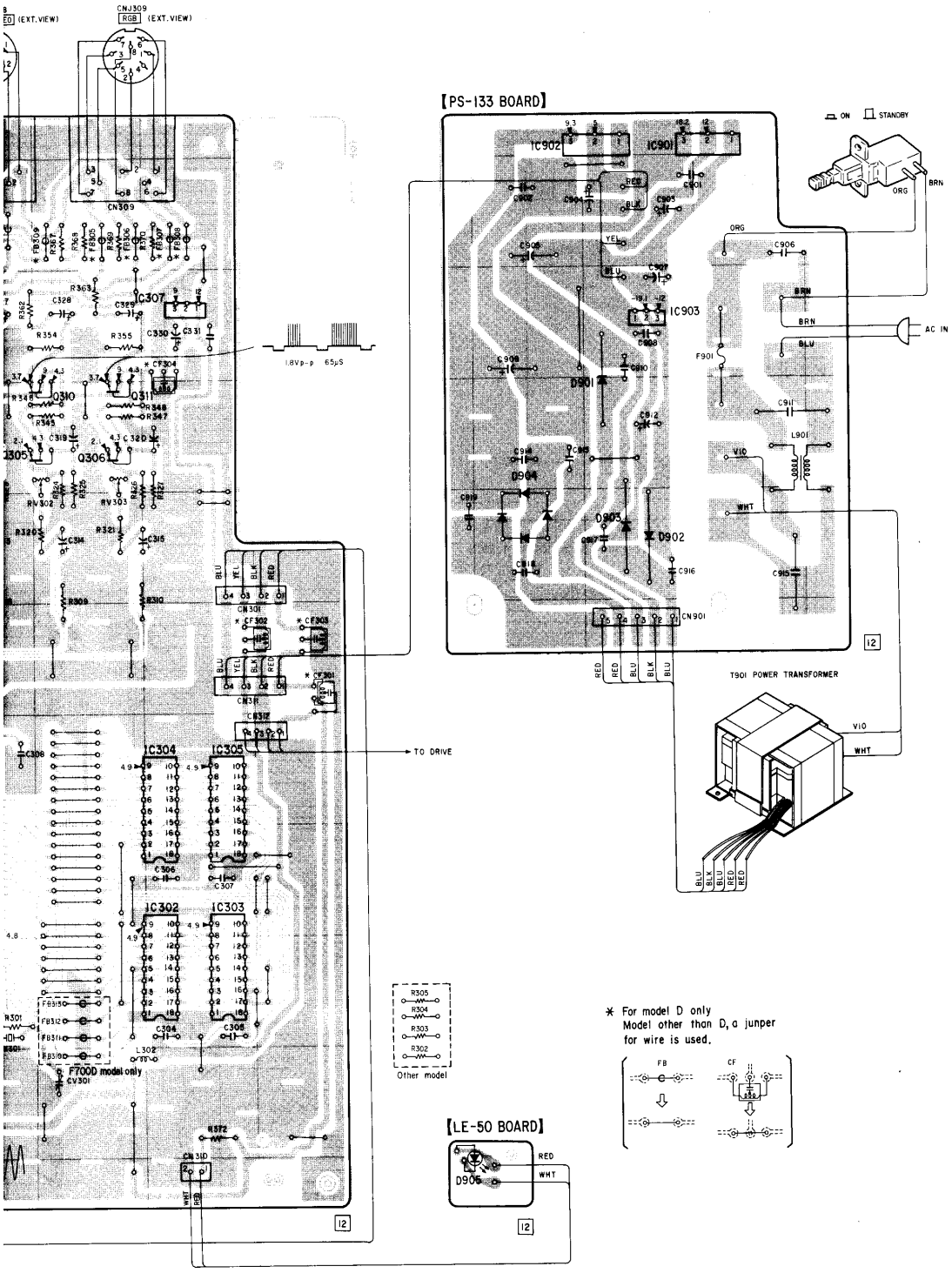
CNJ309
RGB (EXT. VIEW)
(EXT. VIEW)
CN309
IC307
Q310
Q311
Q306
Q305
1.8Vp-p 65μS
CN301
CN311
CN312
IC304
IC305
IC302
IC303
TO DRIVE
F700D model only
CN310
【PS-133 BOARD】
IC902
IC901
IC903
D901
D904
D903
D902
CN901
ON
STANDBY
ORG
BRN
AC IN
F901
L901
T901 POWER TRANSFORMER
V10
WHT
RED
BLU
BLK
YEL
R305
R304
R303
R302
Other model
* For model D only
Model other than D, a junper for wire is used.
FB
CF
【LE-50 BOARD】
D906
RED
WHT

SCHEMATIC DIAGRAM *– main section –* ● **See page 59 for note.**

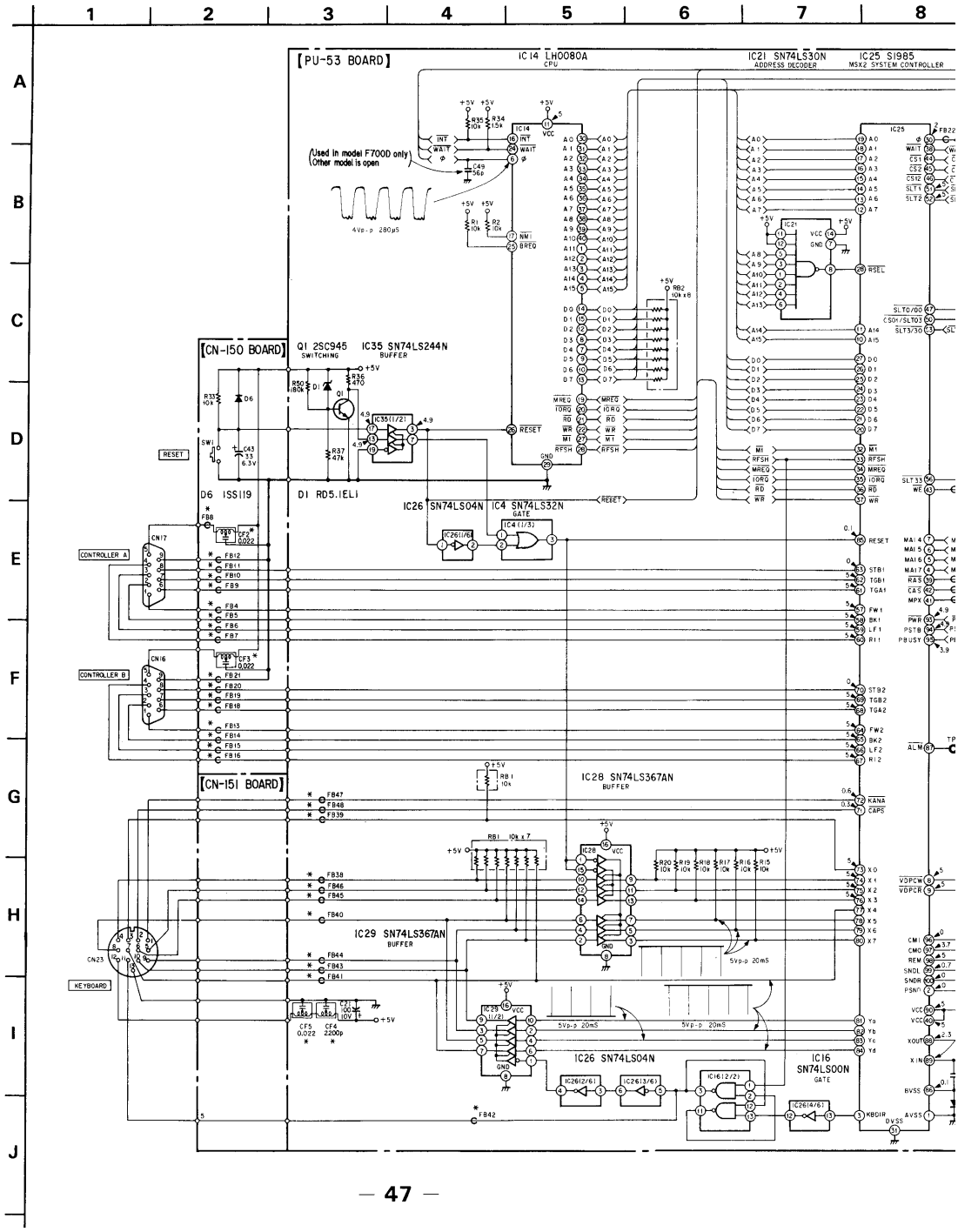

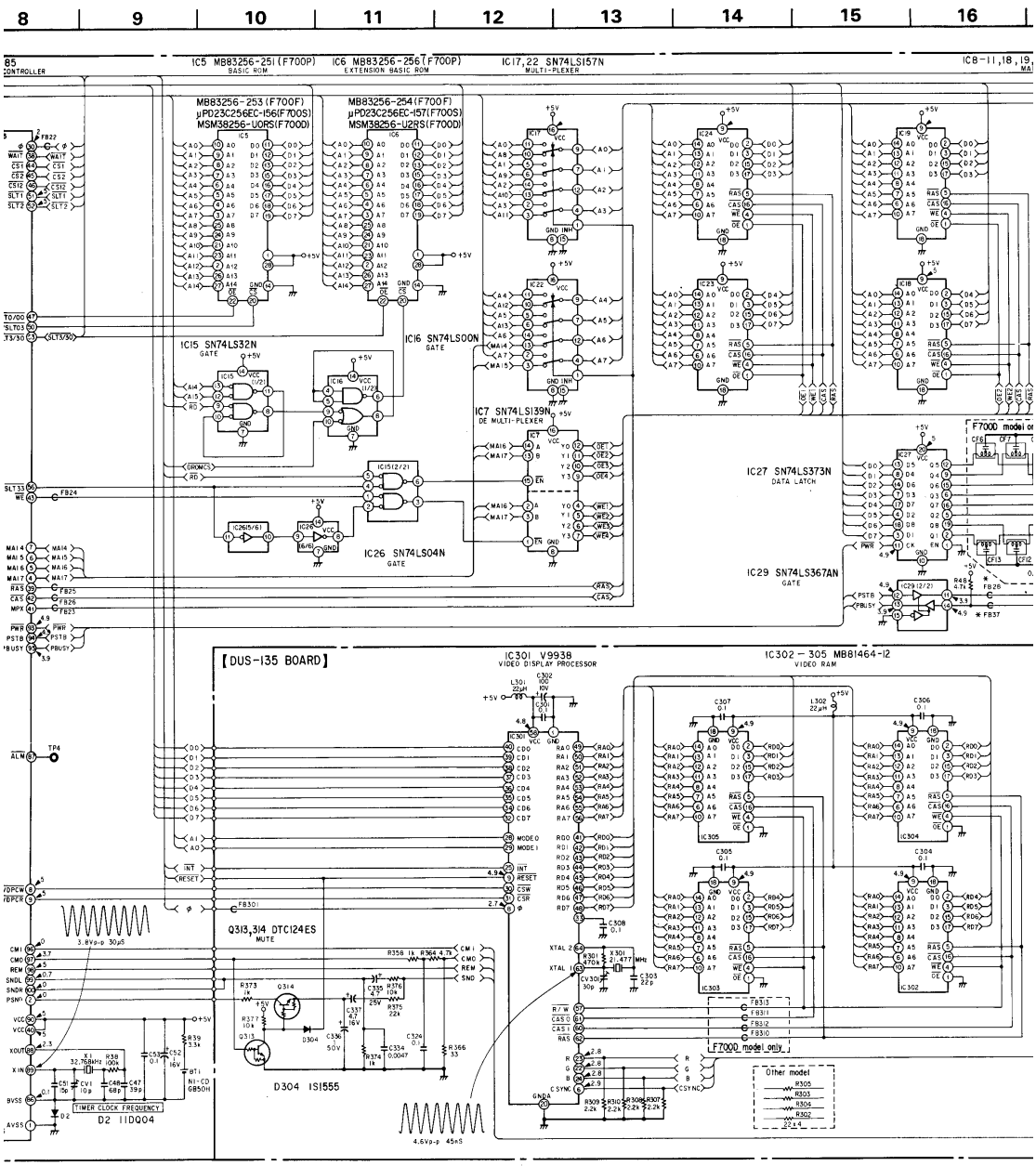
8
9
10
11
12
13
14
15
16
IC5 MB83256-251(F700P)
BASIC ROM
IC6 MB83256-256(F700P)
EXTENSION BASIC ROM
IC17,22 SN74LS157N
MULTI-PLEXER
MB83256-253(F700F)
μPD23C256EC-156(F700S)
MSM38256-U0RS(F700D)
MB83256-254(F700F)
μPD23C256EC-157(F700S)
MSM38256-U2RS(F700D)
IC15 SN74LS32N
GATE
IC16 SN74LS00N
GATE
IC7 SN74LS139N
DE MULTI-PLEXER
IC26 SN74LS04N
GATE
IC27 SN74LS373N
DATA LATCH
IC29 SN74LS367AN
GATE
F700D model only
[DUS-135 BOARD]
IC301 V9938
VIDEO DISPLAY PROCESSOR
IC302-305 MB81464-12
VIDEO RAM
Q313,314 DTC124ES
MUTE
D304 1S1555
TIMER CLOCK FREQUENCY
D2 1ID004
F700D model only
Other model
R305
R303
R304
R302

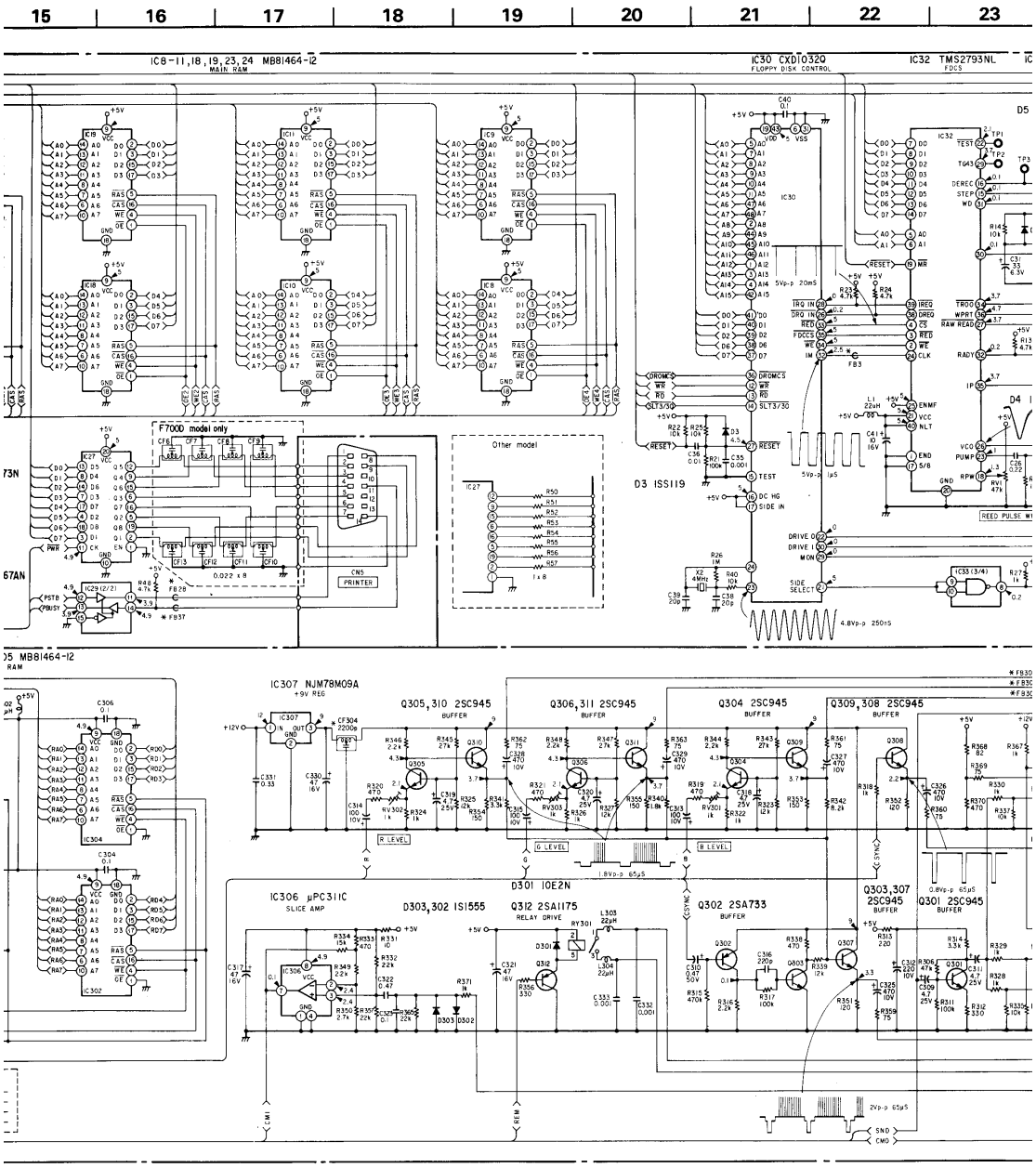
15
16
17
18
19
20
21
22
23
IC8-11,18,19,23,24 MB81464-12
MAIN RAM
IC30 CXD1032Q
FLOPPY DISK CONTROL
IC32 TMS2793NL
FDCS
F700D model only
Other model
CN5
PRINTER
D3 1SS119
REED PULSE
IC307 NJM78M09A
+9V REG
Q305,310 2SC945
BUFFER
Q306,311 2SC945
BUFFER
Q304 2SC945
BUFFER
Q309,308 2SC945
BUFFER
R LEVEL
G LEVEL
B LEVEL
D301 10E2N
IC306 μPC311C
SLICE AMP
D303,302 1S1555
Q312 2SA1175
RELAY DRIVE
Q302 2SA733
BUFFER
Q303,307 2SC945
BUFFER
Q301 2SC945
BUFFER

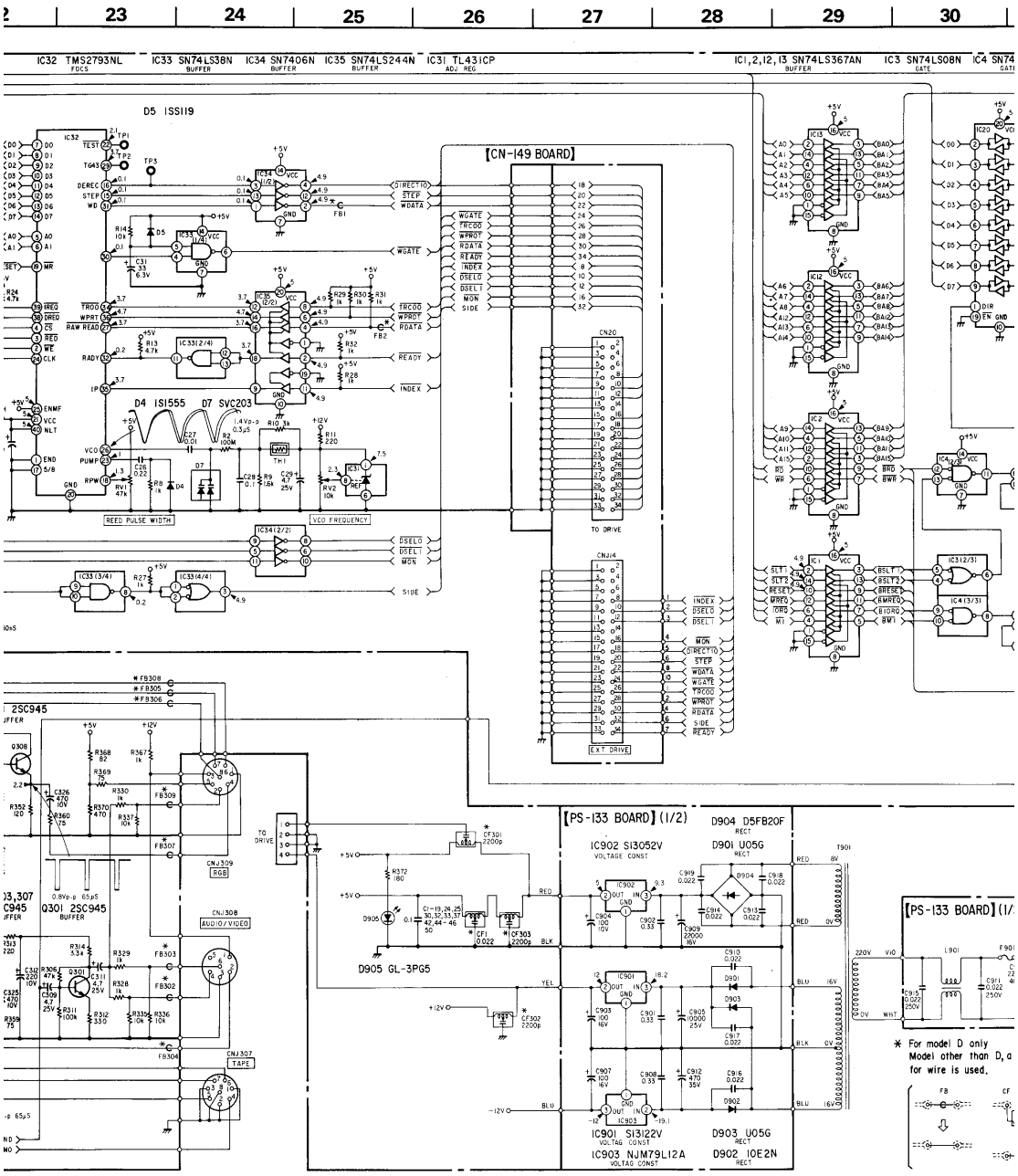
23
24
25
26
27
28
29
30
IC32 TMS2793NL FDCS
IC33 SN74LS38N BUFFER
IC34 SN7406N BUFFER
IC35 SN74LS244N BUFFER
IC31 TL431CP ADJ REG
IC1,2,12,13 SN74LS367AN BUFFER
IC3 SN74LS08N GATE
D5 1SS119
D4 1SI555
D7 SVC203
REED PULSE WIDTH
VCO FREQUENCY
[CN-149 BOARD]
CN20
TO DRIVE
CNJ14
EXT DRIVE
2SC945
Q301 2SC945 BUFFER
CNJ309 RGB
CNJ308 AUDIO/VIDEO
CNJ307 TAPE
TO DRIVE
[PS-133 BOARD] (1/2)
D904 D5FB20F RECT
IC902 SI3052V VOLTAGE CONST
D901 U05G RECT
D905 GL-3PG5
IC901 SI3122V VOLTAG CONST
IC903 NJM79L12A VOLTAG CONST
D903 U05G RECT
D902 10E2N RECT
* For model D only
Model other than D, a
for wire is used.

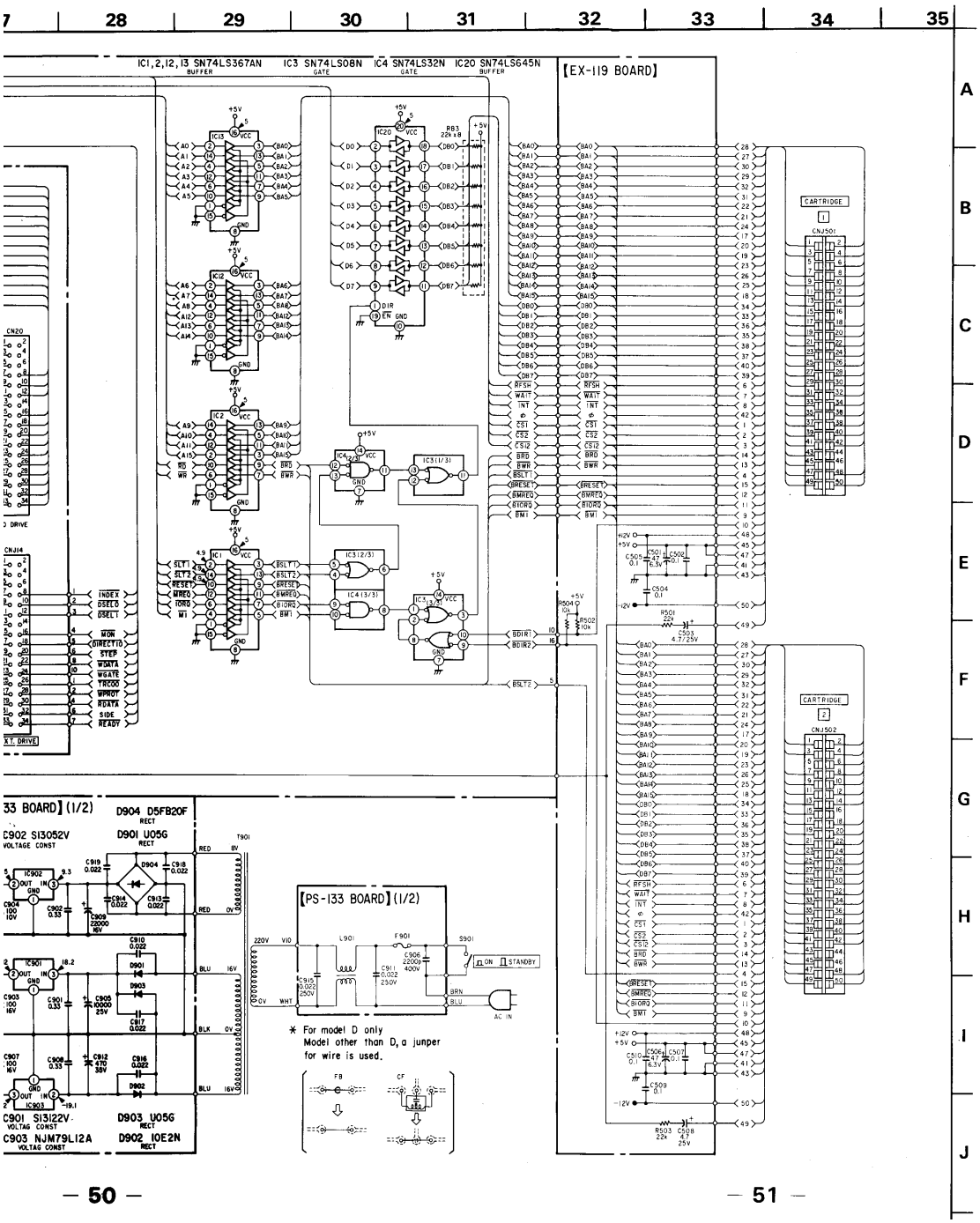
IC1,2,12,13 SN74LS367AN BUFFER
IC3 SN74LS08N GATE
IC4 SN74LS32N GATE
IC20 SN74LS645N BUFFER
[EX-119 BOARD]
CARTRIDGE 1
CARTRIDGE 2
[PS-133 BOARD] (1/2)
D904 D5FB20F RECT
D901 U05G RECT
C902 S13052V VOLTAGE CONST
C901 S13122V VOLTAG CONST
C903 NJM79L12A VOLTAG CONST
D903 U05G RECT
D902 10E2N RECT
ON STANDBY
AC IN
* For model D only
Model other than D, a junper for wire is used.

MOUNTING DIAGRAMS – *drive section* –

– *Conductor Side* –

● See page 59 for note.
● See page 65 for Semiconduct

● **SEMICONDUCTOR LOCATION**

Ref. No.	Location
D401	E-11
IC401	C-3
IC402	F-4
IC403	E-3
Q407	C-11
Q410	F-13
Q411	E-10
Q412	F-12
Q413	E-12
Q414	F-12
Q415	E-12
Q420	D-12
Q421	D-12
Q423	D-3
Q424	F-8

● **SEMICONDUCTOR LOCATION**

Ref. No.	Location
D401	B-14
IC405	E-19

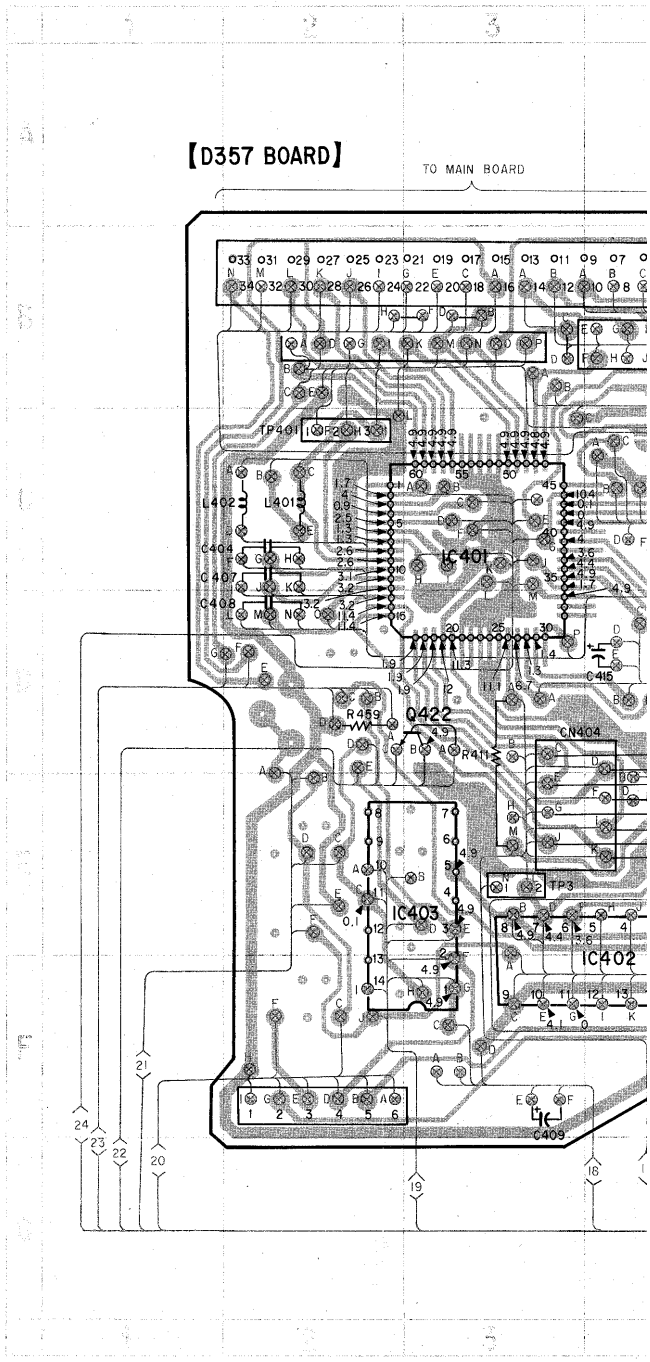

section –

- See page 59 for note.
- See page 65 for Semiconductor lead layouts.

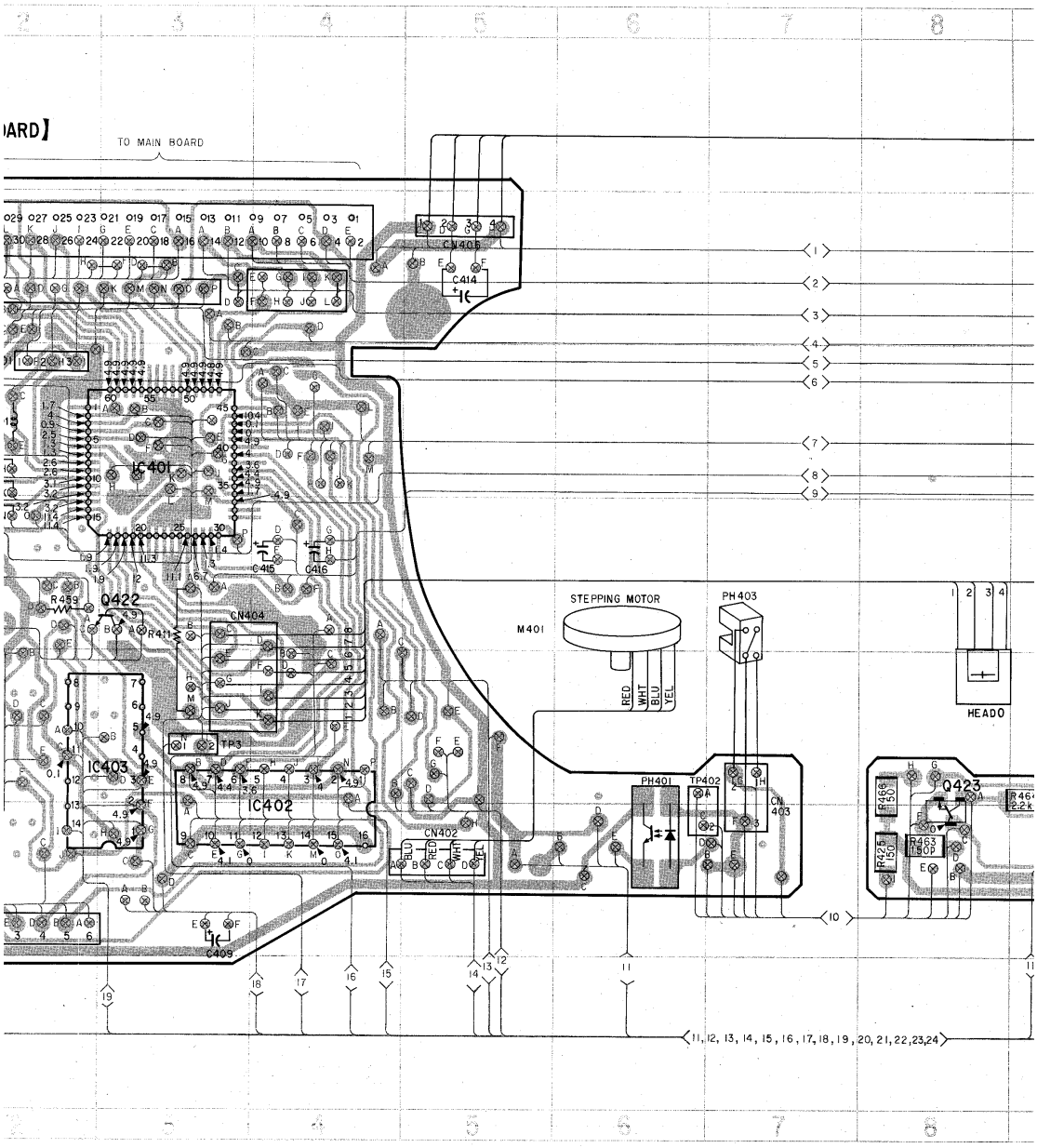

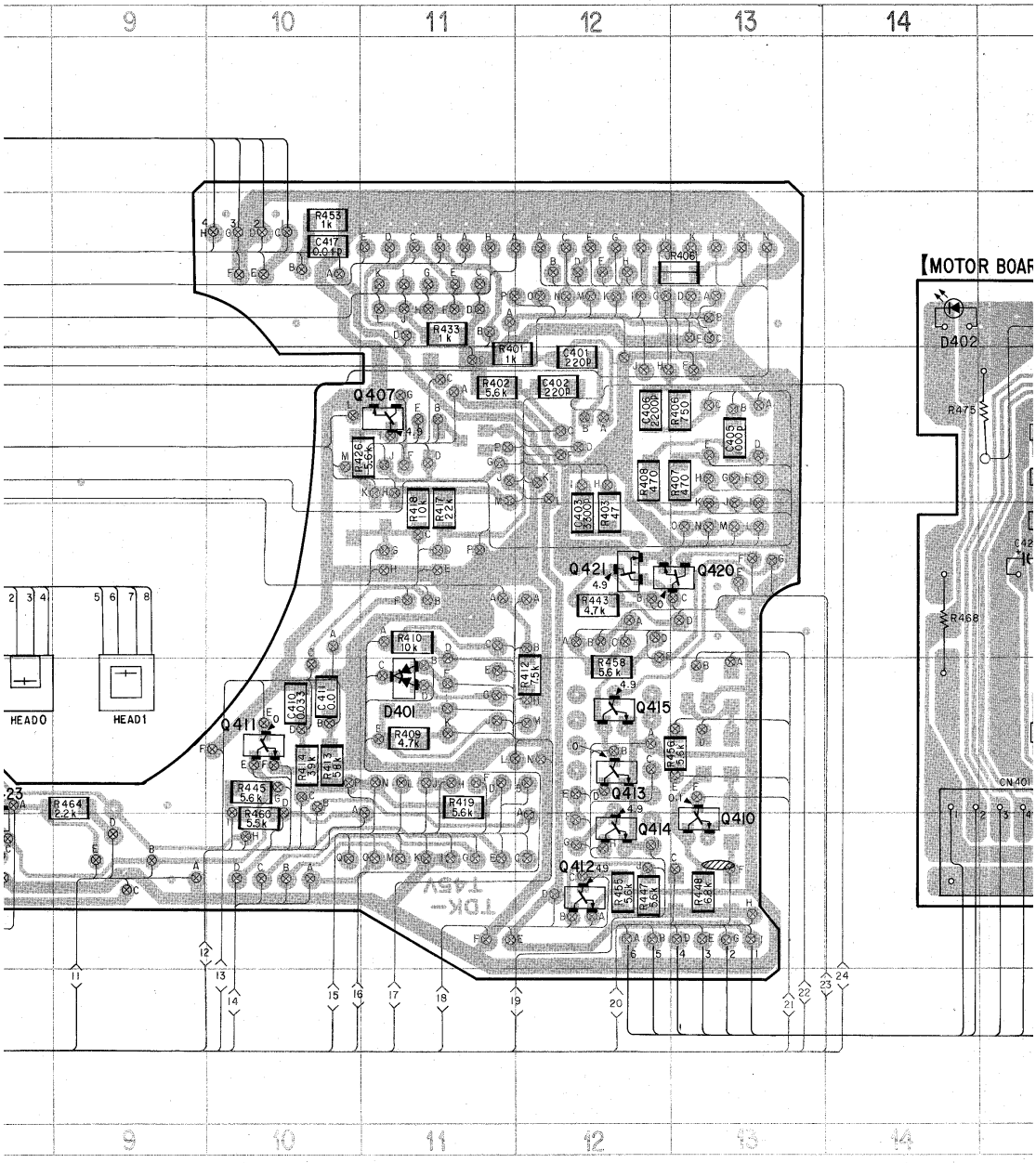
9
10
11
12
13
14
R453 1k
C417 0.01
R406
R433 1k
R401 1k
C401 220p
R402 5.6k
C402 220p
Q407
R426 5.6k
R418 10k
R417 22k
C406 2200p
R405 750
C405 6000p
R408 470
R407 470
C403 6000p
R403 47
Q421
Q420
R443 4.7k
R410 10k
R412 7.5k
R458 5.6k
Q415
C410 0.03
C411 0.01
D401
R409 4.7k
Q411
R441 5.6k
R443 5.6k
R445 5.6k
R460 5.5k
R419 5.6k
R456 5.6k
Q413
Q414
Q410
R464 2.2k
Q412
R455 5.6k
R447 5.6k
R448 6.8k
HEAD0
HEAD1
【MOTOR BOAR
D402
R475
R468
CN401
TDK-
T45V

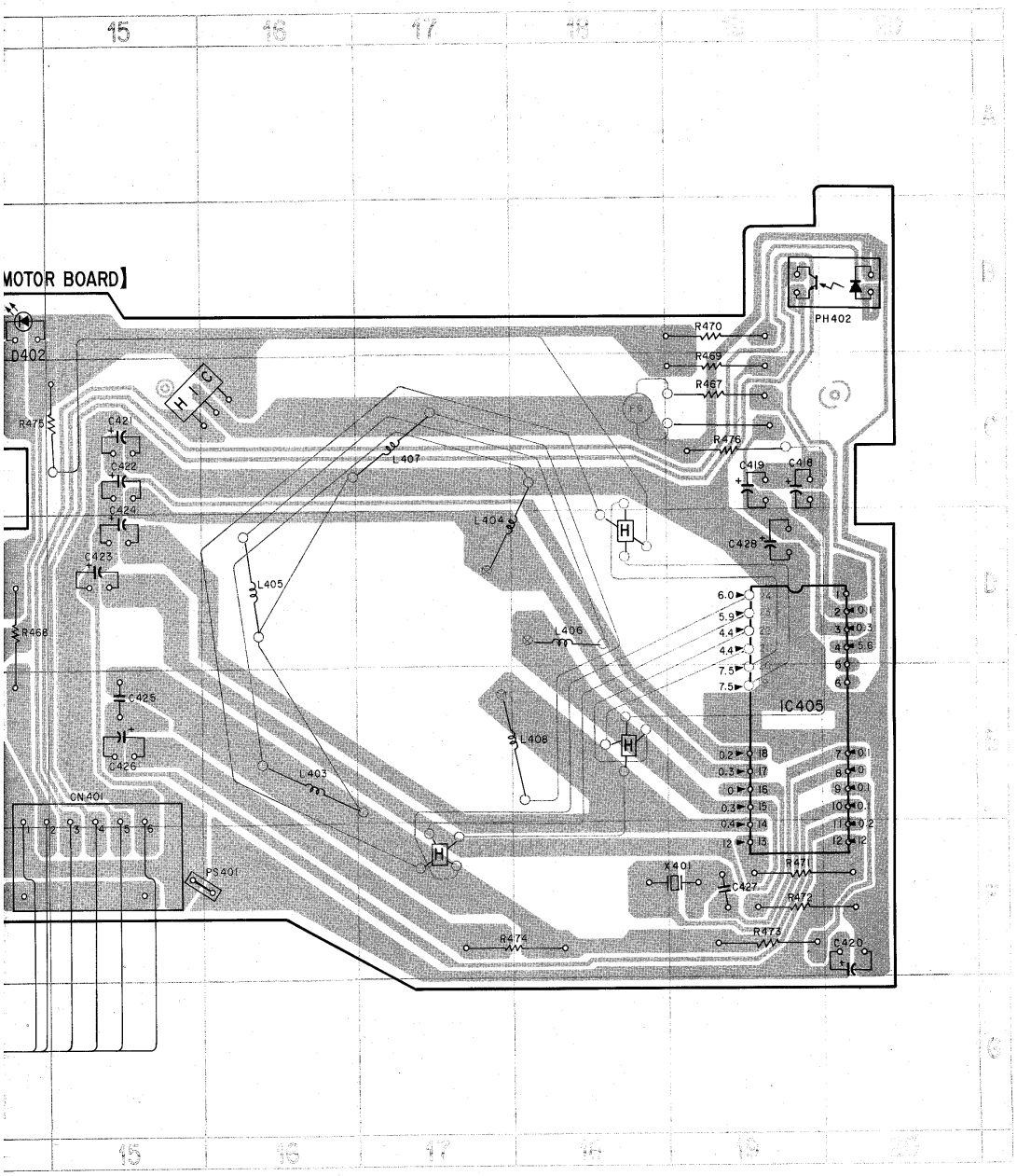
MOTOR BOARD
D402
R475
C421
C422
C424
C423
R468
C425
C426
CN401
PS401
L407
L405
L404
L406
L408
L403
R470
R469
R467
R476
C419
C418
C428
PH402
IC405
X401
C427
R471
R472
R473
R474
C420

SCHEMATIC DIAGRAM — *drive section* — ● See page 59 for note.

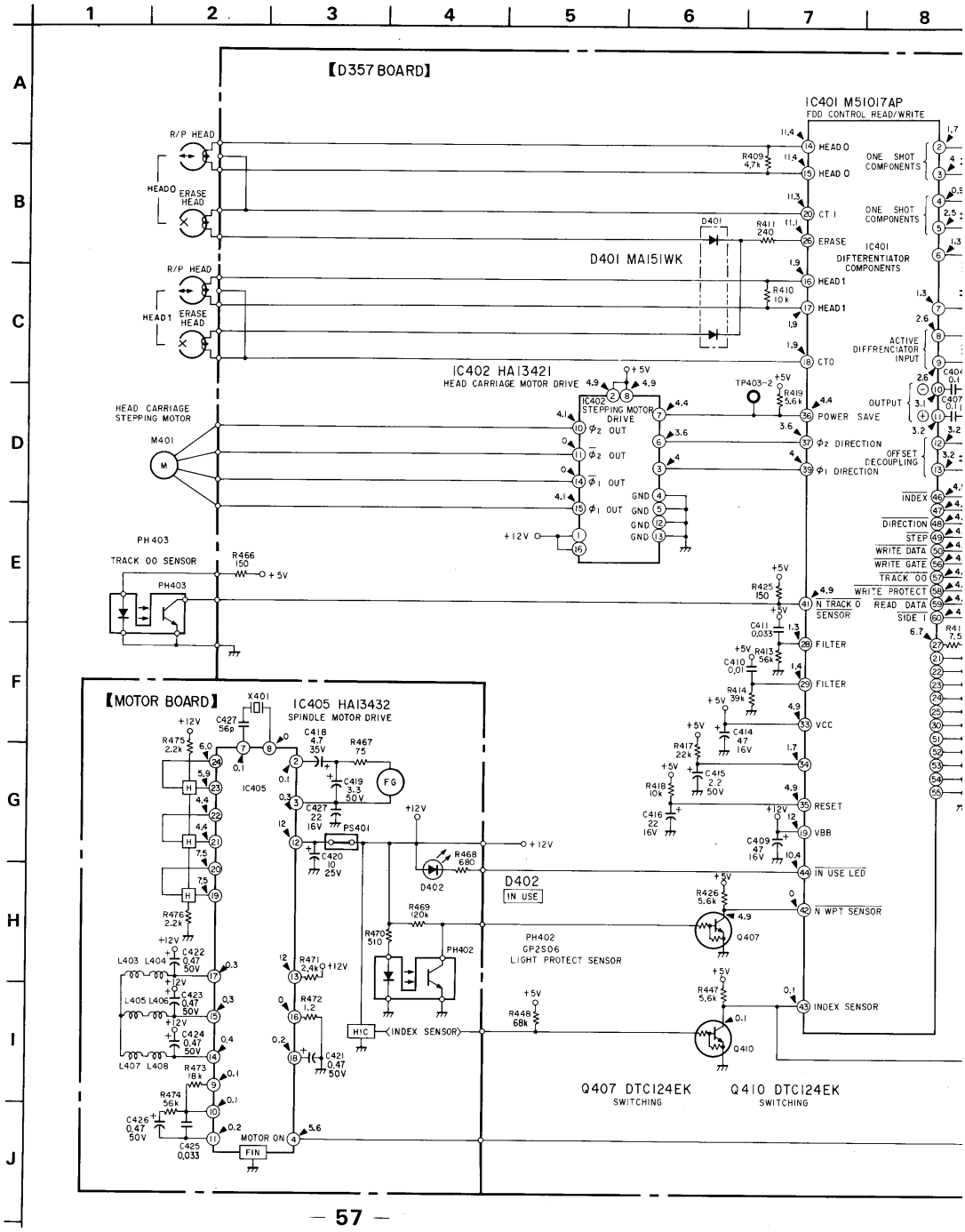

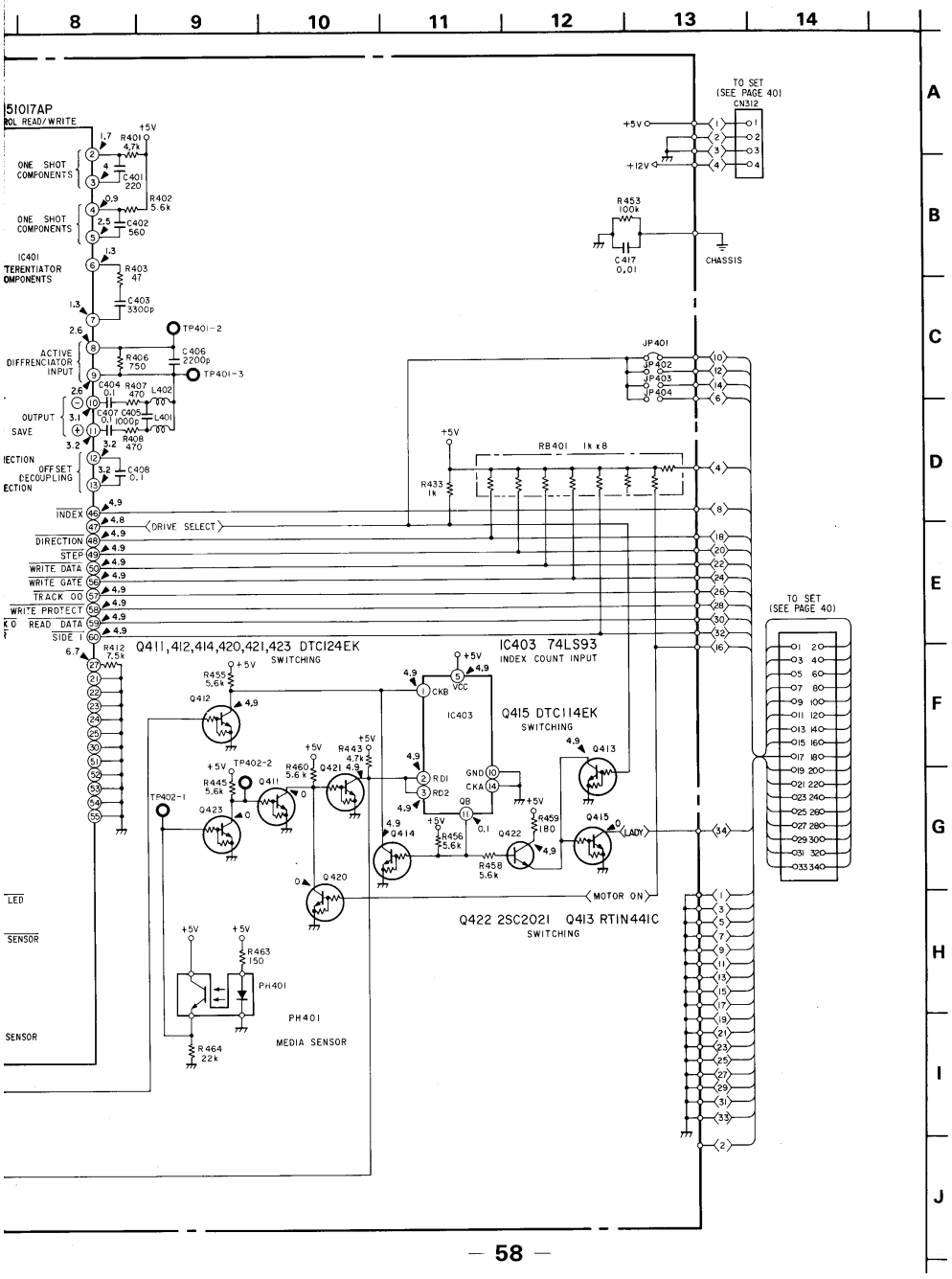
8
9
10
11
12
13
14
A
B
C
D
E
F
G
H
I
J
51017AP
READ/WRITE
ONE SHOT COMPONENTS
ONE SHOT COMPONENTS
IC401
DIFFRENTIATOR COMPONENTS
ACTIVE DIFFRENTIATOR INPUT
OUTPUT
SAVE
OFFSET DECOUPLING
INDEX
DRIVE SELECT
DIRECTION
STEP
WRITE DATA
WRITE GATE
TRACK 00
WRITE PROTECT
READ DATA
SIDE 1
LED
SENSOR
SENSOR
TO SET (SEE PAGE 40)
CN312
+5V
+12V
R453 100k
C417 0.01
CHASSIS
JP401
JP402
JP403
JP404
RB401 1k x 8
R433 1k
TO SET (SEE PAGE 40)
Q411,412,414,420,421,423 DTC124EK
SWITCHING
IC403 74LS93
INDEX COUNT INPUT
Q415 DTC114EK
SWITCHING
Q422 2SC2021 Q413 RTN441C
SWITCHING
MOTOR ON
LADY
PH401
MEDIA SENSOR

Note:

- All capacitors are in μF unless otherwise noted. pF: μμF 50 WV or less are not indicated except for electrolytics and tantalums.
- All resistors are in Ω and 1/4 W or less unless otherwise specified.

Note: The components identified by shading and mark ⚠ are critical for safety. Replace only with part number specified.

Note: Les composants identifiés par une trame et une marque ⚠ sont critiques pour la sécurité. Ne les remplacer que par une pièce portant le numéro spécifié.

- Switch

Ref. No.	Switch	Position
S1	RESET	OFF
S701	SWITCH	OFF
S702	SWITCH	OFF
S901	POWER	OFF

- ▭ : adjustment for repair.
- Voltages are dc with respect to ground unless otherwise noted.
- Readings are taken under no-signal conditions with a VOM (50kΩ/V).
- Voltage variations may be noted due to normal production tolerances.
- Waveforms are taken to ground by using oscilloscope. Voltage variations may be noted due to normal production tolerances.

Note:

- Color code of sleeving over the end of the jacket.

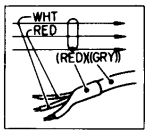

- ⊗ : Through hole.

MOUNTING DIAGRAM

– Conductor Side –

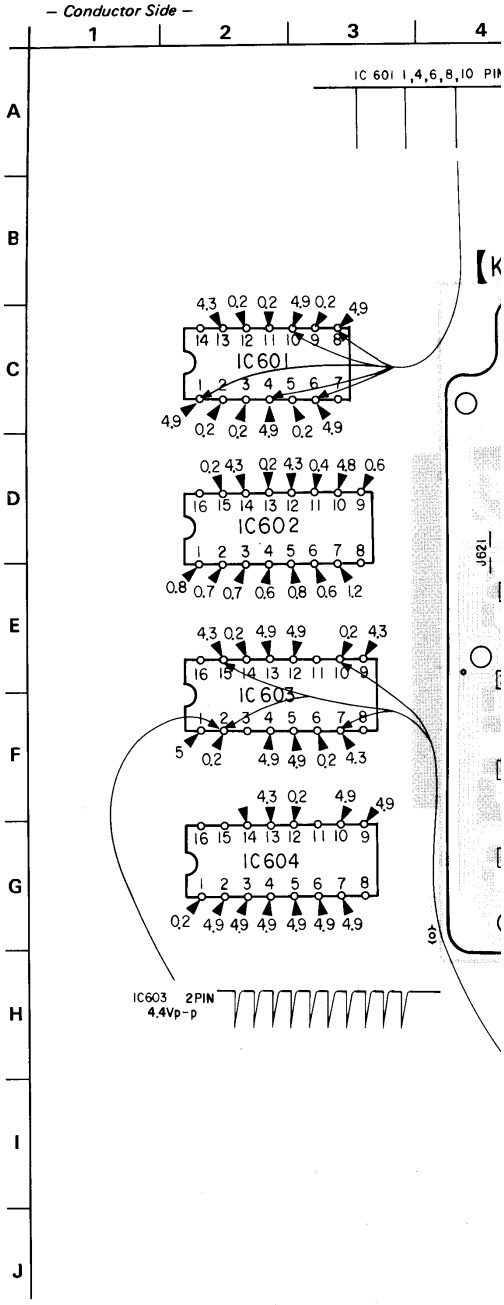

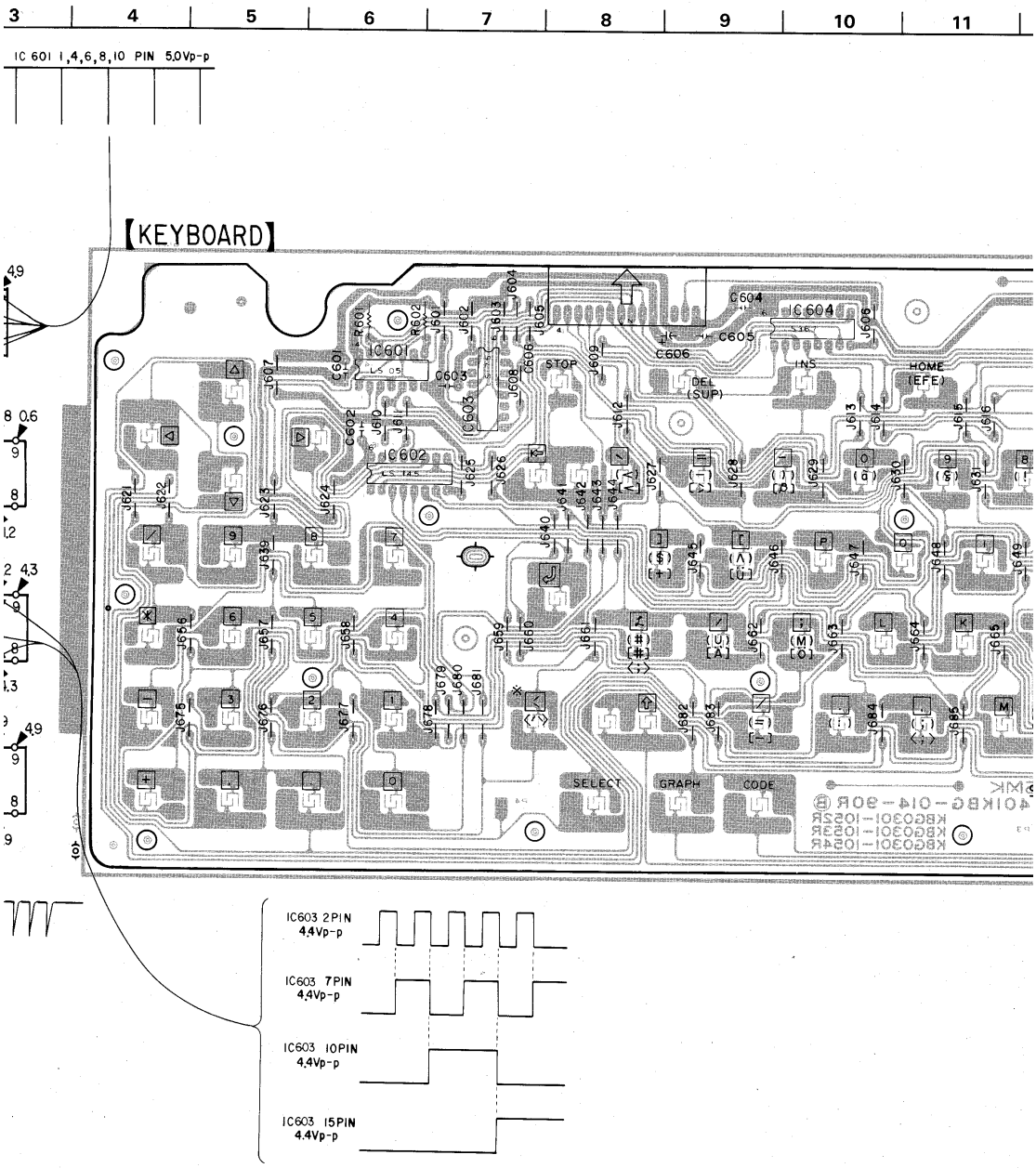
3
4
5
6
7
8
9
10
11
IC 601 1,4,6,8,10 PIN 5.0Vp-p
【KEYBOARD】
IC601
IC602
IC603
IC604
C601
C602
C603
C604
C605
C606
R601
R602
STOP
DEL
(SUP)
INS
HOME
(EFE)
SELECT
GRAPH
CODE
IC603 2PIN
4.4Vp-p
IC603 7PIN
4.4Vp-p
IC603 10PIN
4.4Vp-p
IC603 15PIN
4.4Vp-p

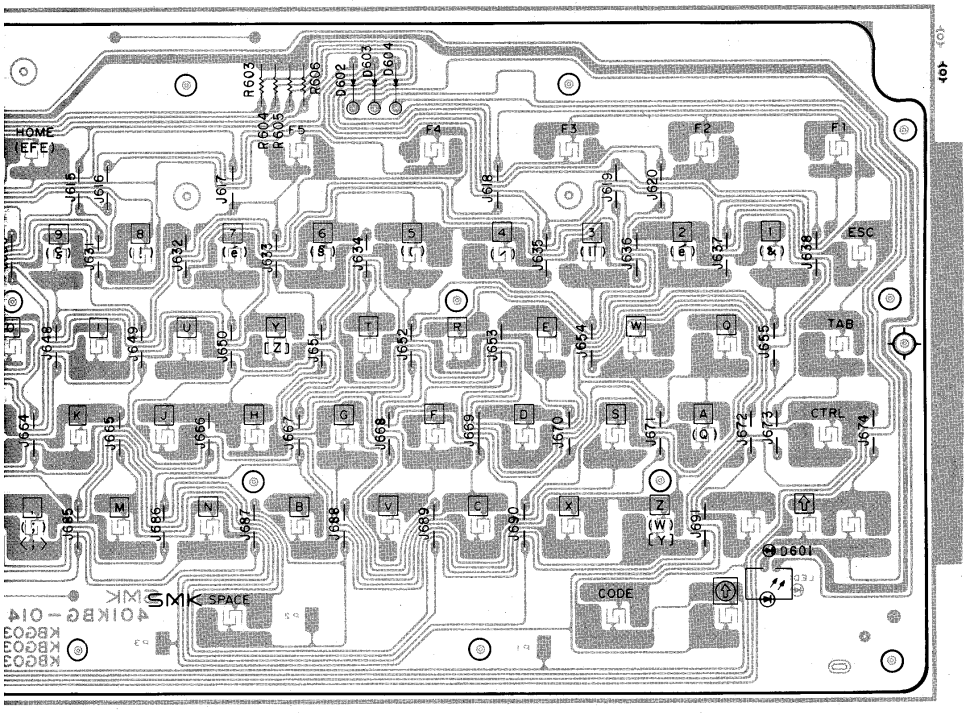

( ) For F model only
[ ] For D model only
〈 〉 For S model only
※ Not used in D, F models

SCHEMATIC DIAGRAM

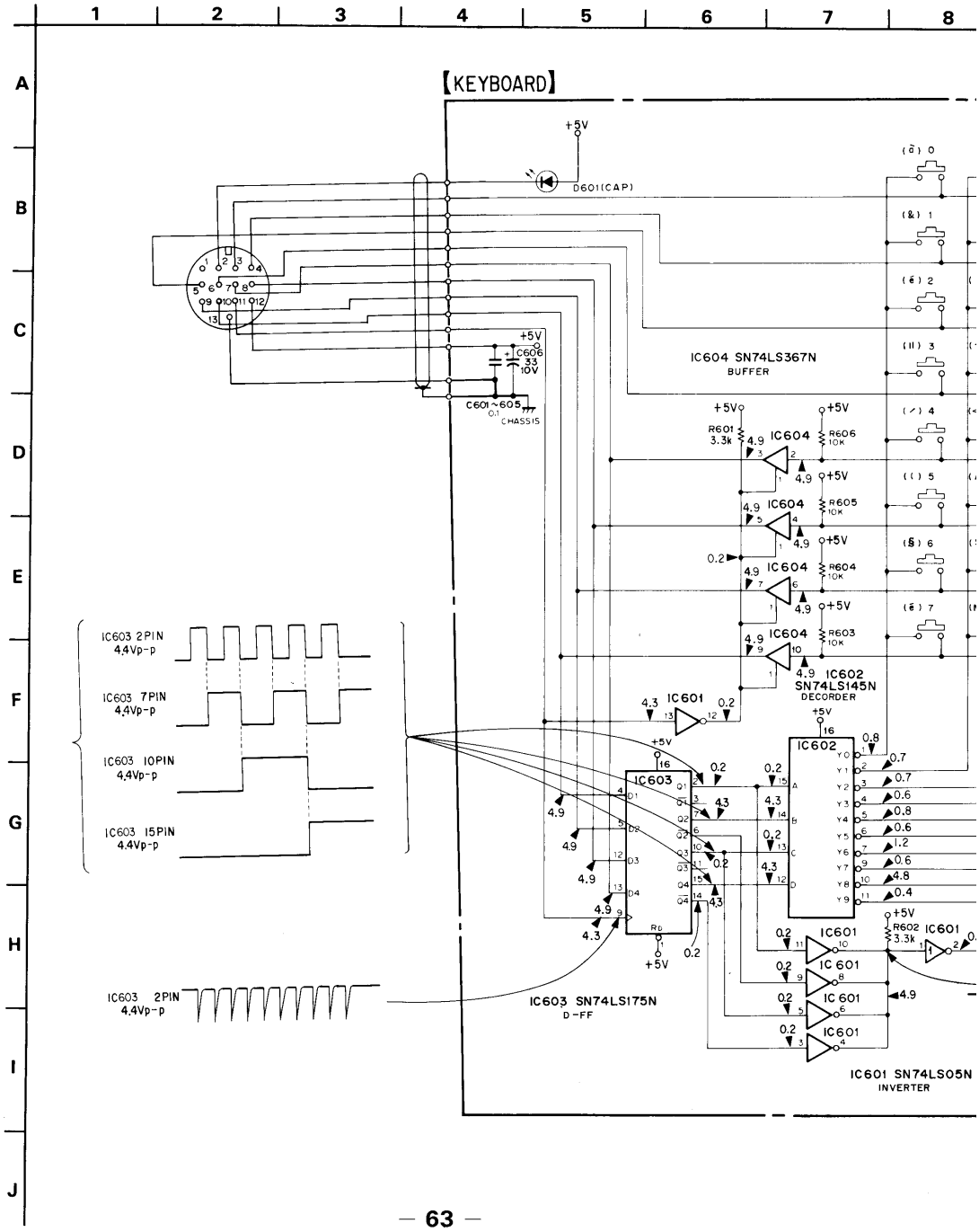

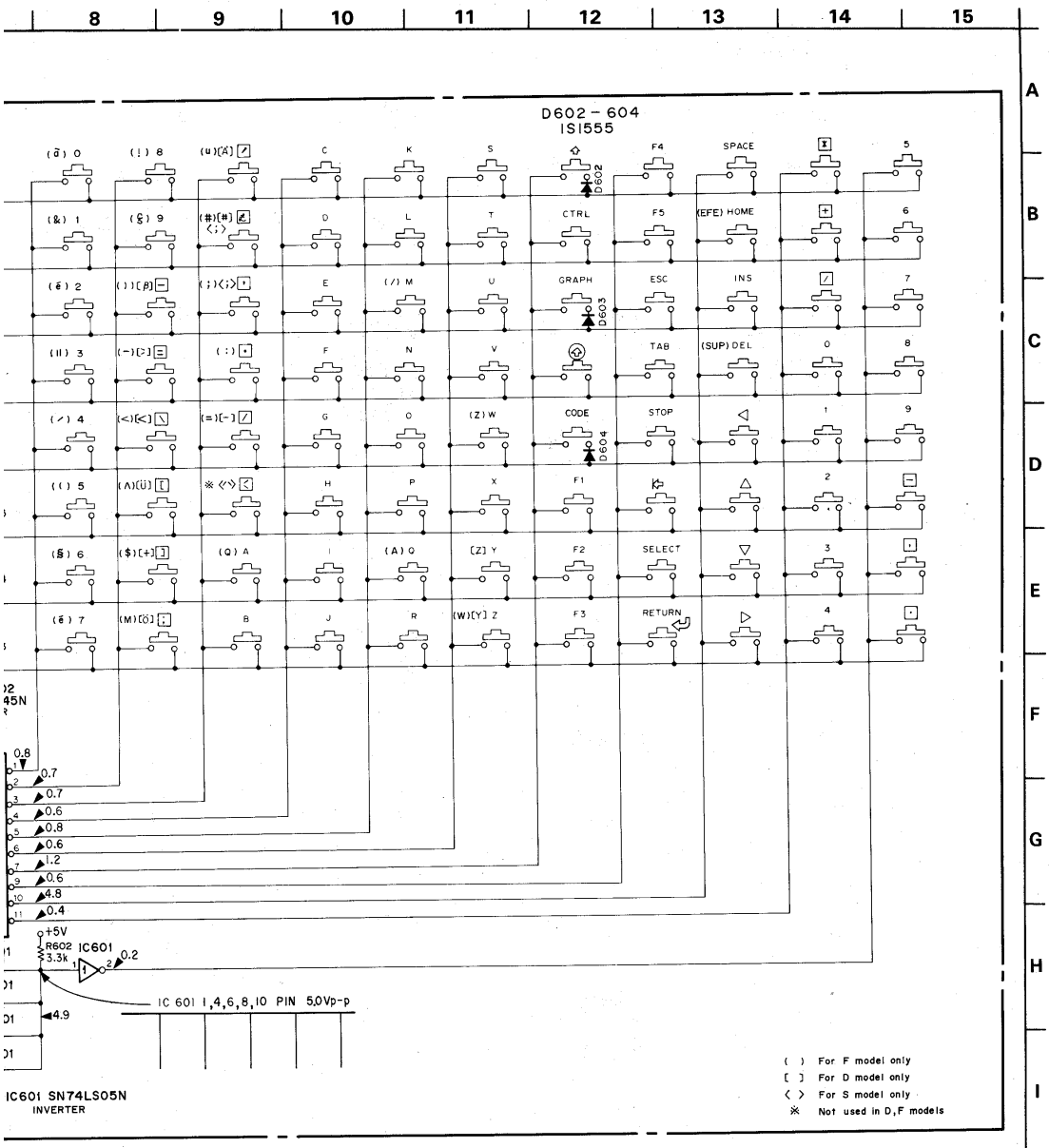
D602 - 604
1S1555
D602
D603
D604
CTRL
GRAPH
CODE
F4
F5
F1
F2
F3
SPACE
(EFE) HOME
ESC
INS
TAB
(SUP) DEL
STOP
SELECT
RETURN
+5V
R602
3.3k
IC601
IC 601 1,4,6,8,10 PIN 5.0Vp-p
IC601 SN74LS05N
INVERTER
( ) For F model only
[ ] For D model only
< > For S model only
※ Not used in D,F models

Semiconductor Lead Layouts

CXD1032Q

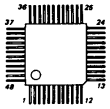

MB81464-12

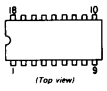

SI3052V
SI3122V

V9938

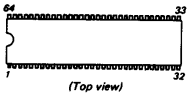

HA13421
MB882101518M
SN74LS139N
SN74LS145N
SN74LS157N
SN74LS175N
SN74LS367AV

MB83256
μPD23C256EC-156

SN74LS00N
SN74LS04N
SN74LS05N
SN74LS06N
SN74LS08N
SN74LS30N
SN74LS32N
SN74LS38N
SN74LS93N

2SA1175

LA6339M

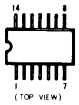

NJM78M09A

SN74LS244N
SN74LS373N
SN74LS645N
TMS2793NL

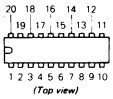

2SC2603F
DTC124ES

LH0080A

NJM79L12A

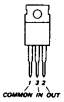

ST23F

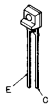

M51017AP

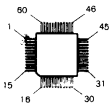

S-1985

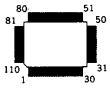

TL431CP
μPC311C

1S1555
10E2N
11D004
RD5.1E-L1

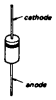

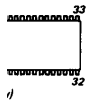

1S2837

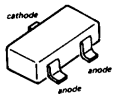

U05G

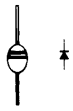

DTC114EK
DTC124EK
RTIN441C

1SS119

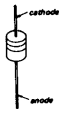

BR3432S

2SC2021

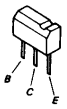

D5FB20F

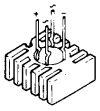

EL23F

GP2S06

MA3100M

GL-3PG5
TLG124A

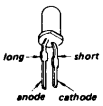

SVC203

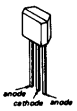

LED4

SECTION 7
EXPLODED VIEWS AND PARTS LIST

NOTE:
- The mechanical parts with no reference number in the exploded views are not supplied.
- Items marked " ★ " are not stocked since they are seldom required for routine service. Some delay should be anticipated when ordering these items.
- The construction parts of an assembled part are indicated with a collation number in the remark column.

The components identified by shading and mark ⚠ are critical for safety. Replace only with part number specified.	Les composants identifiés par une trame et une marque ⚠ sont critiques pour la sécurité. Ne les remplacer que par une pièce portant le numéro spécifié.

(1)

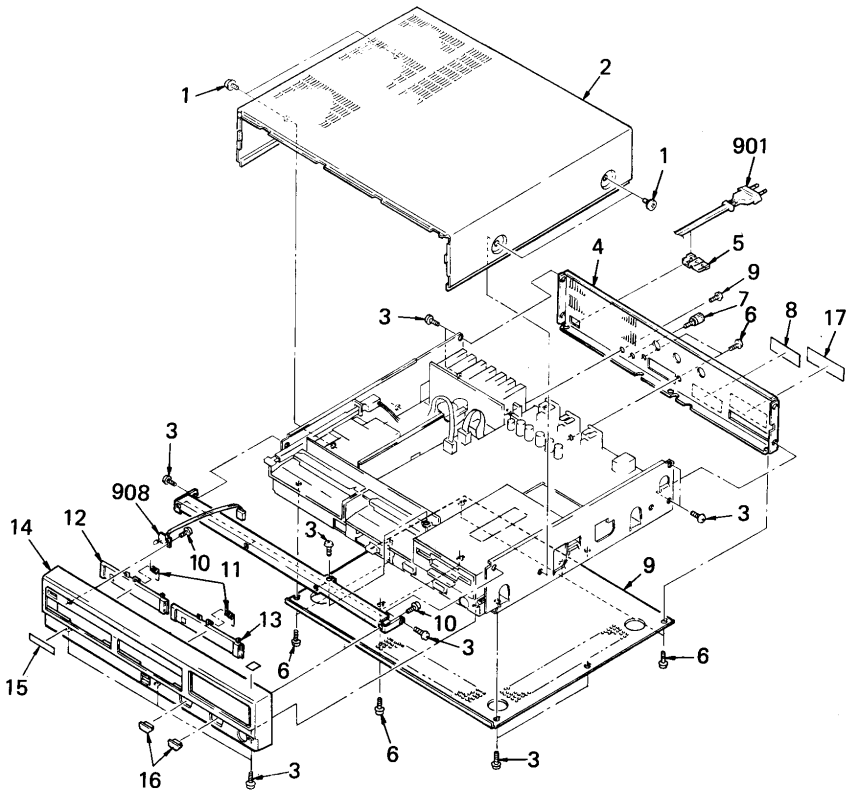

No.	Part No.	Description	Remarks
1	4-889-321-01	SCREW	
2	4-608-924-02	CASE	
3	7-685-871-01	SCREW +BVTT 3X6 (S)	
4	4-608-932-01	PLATE, JACK	
5	2-352-626-01	(HB-F700S).....BUSHING, CORD	
	3-703-244-00	(HB-F700P/F700F)...BUSHING (2104), CORD	
6	7-685-751-09	SCREW +BVTT 3X6 (S)	
7	*3-706-165-00	SCREW	
8	4-608-935-01	(HB-F700F)...LABEL, MODEL NUMBER	
	4-608-936-01	(HB-F700S)...LABEL, MODEL NUMBER	
	4-608-937-01	(HB-F700P)...LABEL, MODEL NUMBER	
	4-608-943-01	(HB-F700D)...LABEL, MODEL NUMBER	
9	*4-608-925-11	PLATE, BOTTOM	
10	7-685-133-19	SCREW +BTP 2.6X6 TYPE2 N-S	
11	4-605-615-01	SPRING	
12	4-608-914-01	LID, CARTRIDGE	
13	4-608-914-11	LID, CARTRIDGE	

No.	Part No.	Description	Remarks
14	X-4608-905-1	(HB-F700P)...PANEL ASSY, FRONT	
	X-4608-906-1	(HB-F700S)...PANEL ASSY, FRONT	
	X-4608-907-1	(HB-F700F)...PANEL ASSY, FRONT	
	X-4608-908-1	(HB-F700D)...PANEL ASSY, FRONT	
15	*4-605-464-01	(HB-F700P)...LABEL, CAUTION	
	*4-605-478-01	(HB-F700F)...LABEL, CAUTION	
	*4-608-460-01	(HB-F700S)...LABEL, CAUTION	
	*4-608-459-01	(HB-F700D)...LABEL, CAUTION	
16	*4-605-456-11	COVER, CONNECTOR	
17	4-608-945-01	(HB-F700S)...LABEL, CONNECTOR	
908	1-619-769-11	PC BOARD, LE-50	

(2)

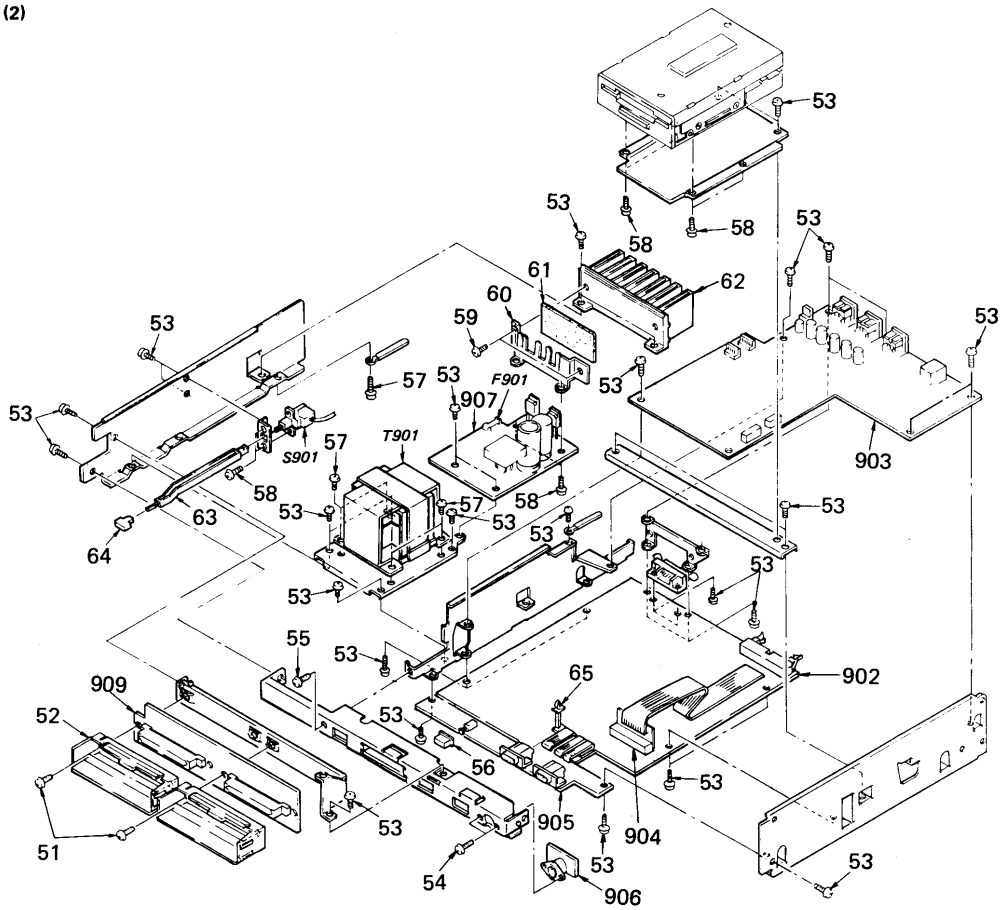

The components identified by shading and mark ⚠ are critical for safety. Replace only with part number specified.	Les composants identifiés par une trame et une marque ⚠ sont critiques pour la sécurité. Ne les remplacer que par une pièce portant le numéro spécifié.

No.	Part No.	Description	Remarks
51	7-685-872-09	SCREW +BVTT 3X8 (S)	
52	4-608-915-01	HOLDER, CARTRIDGE	
53	7-685-871-01	SCREW +BVTT 3X6 (S)	
54	7-621-259-25	SCREW +P 2.6X4	
55	7-685-751-04	SCREW +PTT 3X6 (S)	
56	4-608-904-11	BUTTON, RESET	
57	7-685-880-01	SCREW +BVTT 4X6 (S)	
58	7-682-646-01	SCREW +PS 3X5	
59	7-685-145-19	SCREW +BTP 3X6 TYPE2 N-S	
60	*4-608-901-11	SUPPORT, POWER	
61	*4-608-931-01	SHEET, COOL	
62	4-902-825-01	HEAT SINK (SMALL)	
63	4-608-905-01	ROD, PS	
64	4-605-609-21	BUTTON, POWER	
65	*4-875-735-00	SUPPORT, PC	

No.	Part No.	Description	Remarks
902	*A-8080-183-A	(HB-F700P)...MOUNTED PCB, PU-53P	
	*A-8080-188-A	(HB-F700F)...MOUNTED PCB, PR-53F	
	*A-8080-189-A	(HB-F700S)...MOUNTED PCB, PR-53S	
	*A-8080-193-A	(HB-F700D)...MOUNTED PCB, PU-53D	
903	*A-8080-186-A	(HB-F700P/F/S)...MOUNTED PCB, DUS-135	
	*A-8080-195-A	(HB-F700D).....MOUNTED PCB, DUS-135D	
904	1-619-764-11	PC BOARD, CN-149	
905	1-619-765-11	PC BOARD, CN-150	
906	1-619-766-11	PC BOARD, CN-151	
907	1-619-768-11	PC BOARD, PS-133	
909	*1-619-770-11	PC BOARD, EX-119	
F901	⚠1-532-284-11	FUSE T630mA	
S901	⚠1-553-318-00	SWITCH, PUSH (AC POWER)(1 KEY)	
T901	⚠1-448-626-11	TRANSFORMER, POWER	

(3)

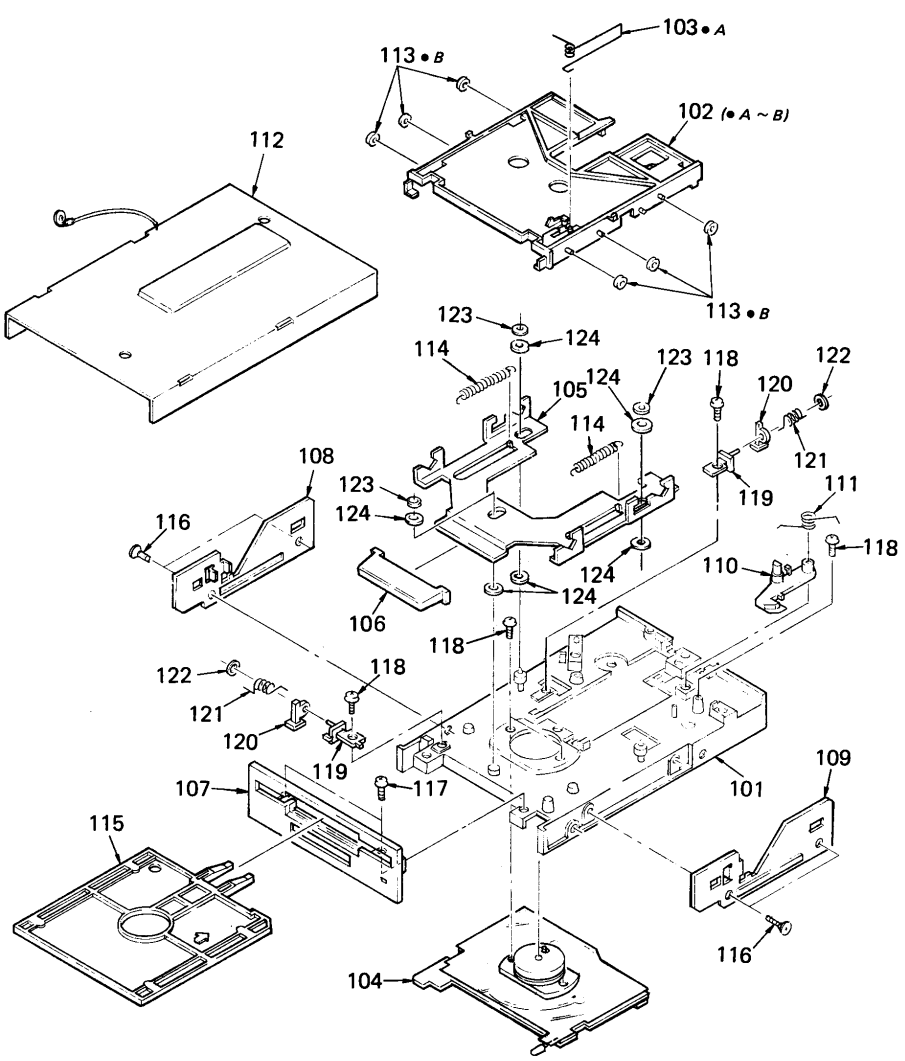

No.	Part No.	Description	Remarks
101	9-991-097-01	FRAM UNIT (B)	
102	9-991-098-01	DISK HOLDER	
103	9-991-099-01	INSERT SPRING	
104	9-991-101-01	D.D MOTOR	
105	9-991-102-01	EJECTOR	
106	9-991-103-01	P BUTTON (D)	
107	9-989-204-01	FRONT BEZEL (S) ASSY	
108	9-991-104-01	SIDE PLATE (A)	
109	9-991-105-01	SIDE PLATE (B)	
110	9-989-206-01	EJECT HOOK	
111	9-991-108-01	EJECT HOOK SPRING (B)	
112	9-991-109-01	FDD COVER (D)	

No.	Part No.	Description	Remarks
113	9-991-110-01	ROLLER	
114	9-991-111-01	EJECTOR SPRING	
115	9-990-318-01	DUMMY DISK	
116	7-682-247-13	SCREW +K 3X6	
117	7-621-770-67	SCREW +B 2.6X6	
118	7-621-770-87	SCREW +B 2.6X5	
119	9-991-119-01	SWITCH HOLDER (A)	
120	9-991-121-01	SWITCH LEVER	
121	9-991-122-01	LEVER SPRING (B)	
122	9-991-991-01	WASHER	
123	9-991-992-01	WASHER	
124	9-9910993-01	WASHER	

(4)

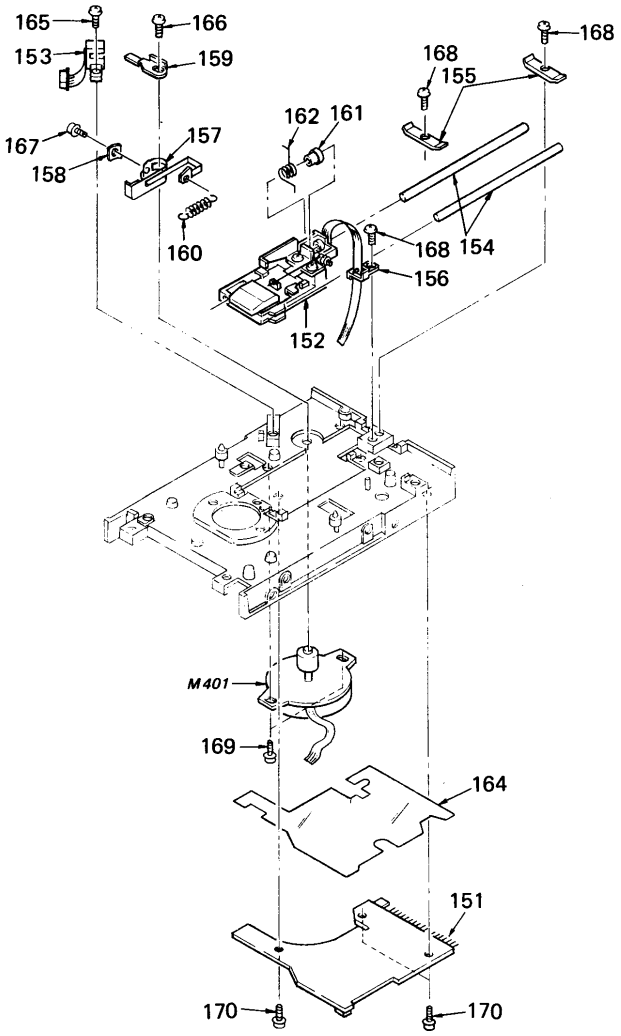

No.	Part No.	Description	Remarks
151	9-991-100-01	MOUNTED BOARD	
152	9-989-202-01	CARRIAGE ASSY	
153	9-989-205-01	00 SENSOR ASSY	
154	9-991-106-01	GUIDE SHAFT (C)	
155	9-991-107-01	GUIDE SHAFT CLAMPER	
156	9-991-112-01	FPC HOLDER	
157	9-991-113-01	STEEL BELT (A)	
158	9-991-114-01	BELT CLAMPER (B)	
159	9-991-115-01	SHUTTER	
160	9-991-116-01	CARRIAGE SPRING	

No.	Part No.	Description	Remarks
161	9-991-117-01	GUIDE SHAFT SPACER	
162	9-991-118-01	SHTTLING SPRING (A)	
164	9-991-123-01	INSULATING SHEET (E)	
165	7-682-147-13	SCREW +P 3X6	
166	7-621-255-22	SCREW +P 2X4	
167	7-621-259-12	SCREW +P 2.6X3	
168	7-621-770-87	SCREW +B 2.6X5	
169	9-991-124-01	BOLT	
170	7-628-254-10	SCREW +PS 2.6X6	
M401	9-989-207-01	STEPPING MOTOR	

(5)

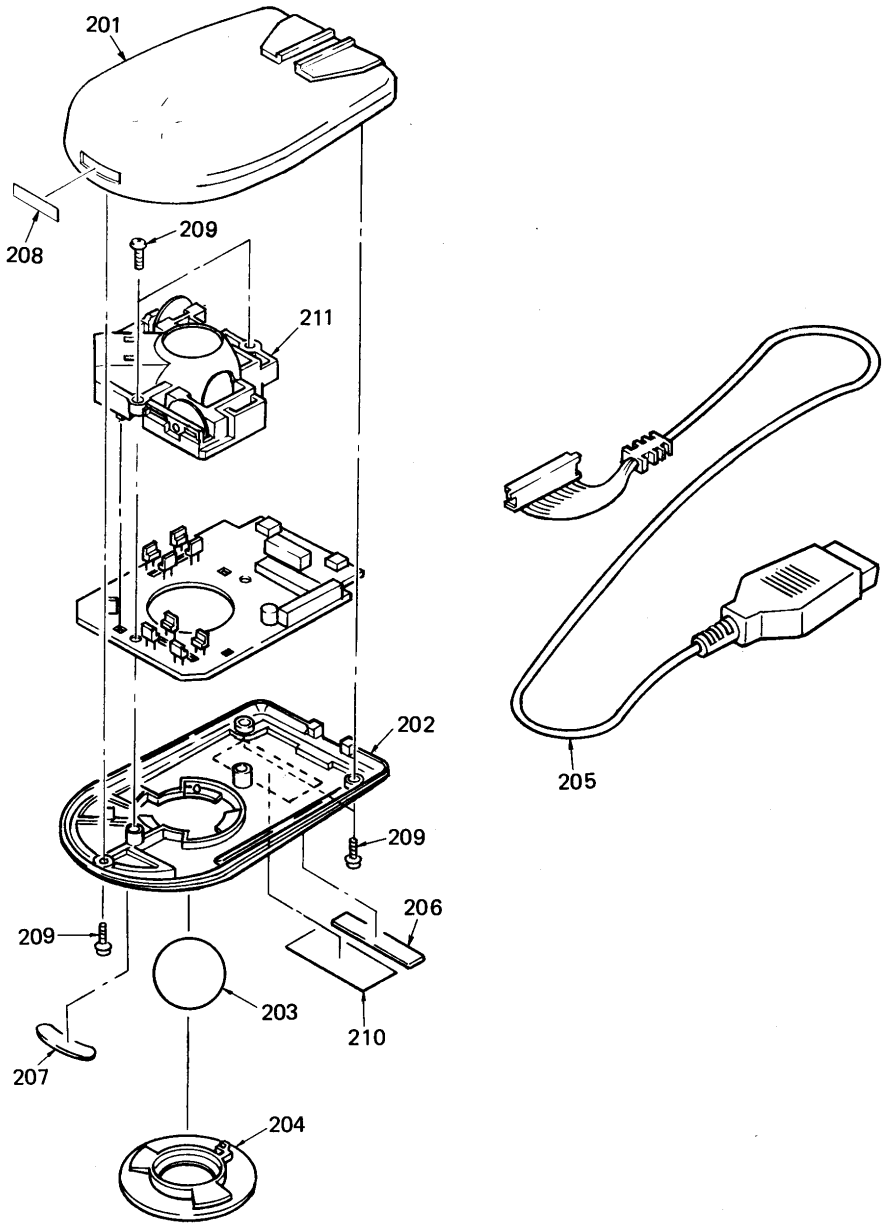

No.	Part No.	Description	Remarks
201	9-991-858-01	COVER ASSY	
202	9-990-859-01	CASE	
203	9-990-860-01	BOLL	
204	9-990-861-01	RETAINER	
205	9-990-862-01	CORD	
206	9-990-863-01	FOOT A	
207	9-990-864-01	FOOT B	
208	9-990-865-01	LABEL	
209	7-685-134-01	SCREW +P 2.6X8	
210	9-990-866-01	LABEL	
211	9-990-869-01	ENCODER	

(6)

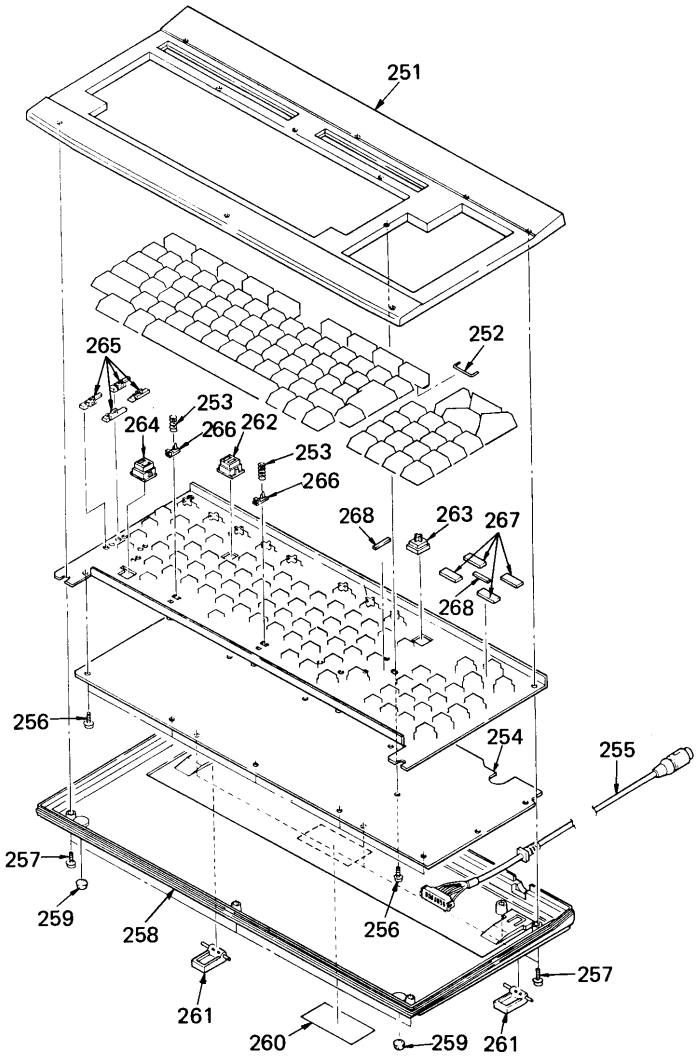

No.	Part No.	Description	Remarks
251	9-990-852-01	CASE, UPPER	
252	9-989-300-01	SHAFT (FUNCION SWITCH)	
253	9-989-301-01	SPRING	
254	9-989-365-01	BOARD, PW	
255	9-989-366-01	CORD ASSY	
256	7-682-145-01	SCREW +P 3X4	
257	7-682-148-01	SCREW +P 3X8	
258	9-990-853-01	CASE, LOWER	
259	9-989-306-01	FOOT	
260	9-990-910-01	(HB-F700P)...LABEL (A)	
	9-990-913-01	(HB-F700S)...LABEL (A)	
	9-990-909-01	(HB-F700F)...LABEL (A)	
	9-990-854-01	(HB-F700D)...LABEL (A)	

No.	Part No.	Description	Remarks
261	9-989-305-01	BRACKET	
262	9-990-850-01	KET SWITCH	
263	9-989-295-01	KET SWITCH (FUNCTION)	
264	9-989-851-01	KET SWITCH (LED KEY SWITCH)	
265	9-989-293-01	HOOK D	
266	9-989-291-01	HOOK A	
267	9-991-989-01	CUSHION	
268	9-991-967-01	CUSHION	

(7)

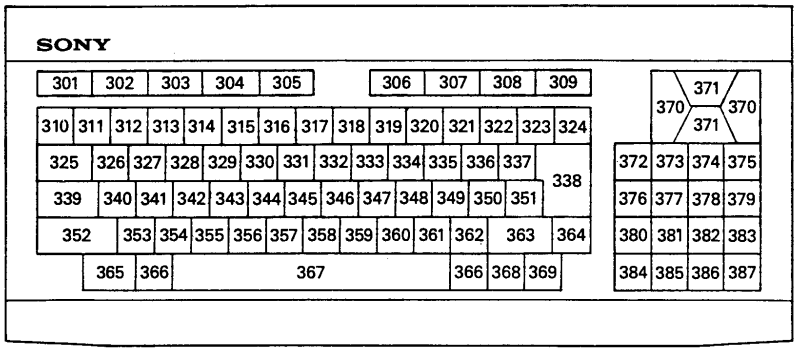

HB-F700P/F700S

No.	Part No.	Dscription	Remarks
301	9-989-209-01	KEY TOP	
302	9-989-210-01	KEY TOP	
303	9-989-211-01	KEY TOP	
304	9-989-212-01	KEY TOP	
305	9-989-213-01	KEY TOP	
306	9-989-214-01	KEY TOP	
307	9-989-215-01	KEY TOP	
308	9-989-216-01	KEY TOP	
309	9-989-217-01	KEY TOP	
310	9-989-218-01	KEY TOP	
311	9-989-314-01	KEY TOP	
312	9-989-315-01	KEY TOP	
313	9-989-316-01	KEY TOP	
314	9-989-317-01	KEY TOP	
315	9-989-318-01	KEY TOP	
316	9-989-319-01	KEY TOP	
317	9-989-320-01	KEY TOP	
318	9-989-321-01	KEY TOP	
319	9-989-322-01	KEY TOP	
320	9-989-323-01	KEY TOP	
321	9-989-324-01	KEY TOP	
322	9-989-325-01	KEY TOP	
323	9-989-326-01	KEY TOP	
324	9-989-327-01	KEY TOP	
325	9-989-233-01	KEY TOP	
326	9-989-328-01	KEY TOP	
327	9-989-329-01	KEY TOP	
328	9-989-330-01	KEY TOP	
329	9-989-331-01	KEY TOP	
330	9-989-332-01	KEY TOP	
331	9-989-333-01	KEY TOP	
332	9-989-334-01	KEY TOP	
333	9-989-335-01	KEY TOP	
334	9-989-336-01	KEY TOP	
335	9-989-337-01	KEY TOP	
336	9-989-338-01	KEY TOP	
337	9-989-339-01	KEY TOP	
338	9-989-369-01	RETVRN KEY ASSY	
339	9-989-310-01	CTRL KEY ASSY	
340	9-989-340-01	KEY TOP	
341	9-989-341-01	KEY TOP	
342	9-989-342-01	KEY TOP	
343	9-989-343-01	KEY TOP	
344	9-989-344-01	KEY TOP	
345	9-989-345-01	KEY TOP	

HB-F700P/F700S

No.	Part No.	Dscription	Remarks
346	9-989-346-01	KEY TOP	
347	9-989-347-01	KEY TOP	
348	9-989-348-01	KEY TOP	
349	9-989-349-01	(HB-F700P)...KEY TOP	
	9-990-911-01	(HB-F700S)...KEY TOP	
350	9-989-350-01	KEY TOP	
351	9-989-351-01	(HB-F700P)...KEY TOP	
	9-990-911-01	(HB-F700S)...KEY TOP	
352	9-989-311-01	SHIFT KEY LEFT ASSY	
353	9-989-352-01	KEY TOP	
354	9-989-353-01	KEY TOP	
355	9-989-354-01	KEY TOP	
356	9-989-355-01	KEY TOP	
357	9-989-356-01	KEY TOP	
358	9-989-357-01	KEY TOP	
359	9-989-358-01	KEY TOP	
360	9-989-359-01	KEY TOP	
361	9-989-360-01	KEY TOP	
362	9-989-361-01	(HB-F700P)...KEY TOP	
	9-990-912-01	(HB-F700S)...KEY TOP	
363	9-989-312-01	SHIFT KEY RIGHT ASSY	
364	9-989-362-01	KEY TOP	
365	9-989-363-01	KEY TOP	
366	9-989-364-01	KEY TOP	
367	9-989-313-01	KEY TOP	
368	9-989-270-01	KEY TOP	
369	9-989-272-01	KEY TOP	
370	9-989-273-01	KEY TOP	
371	9-989-274-01	KEY TOP	
372	9-989-275-01	KEY TOP	
373	9-989-276-01	KEY TOP	
374	9-989-277-01	KEY TOP	
375	9-989-278-01	KEY TOP	
376	9-989-279-01	KEY TOP	
377	9-989-280-01	KEY TOP	
378	9-989-281-01	KEY TOP	
379	9-989-282-01	KEY TOP	
380	9-989-283-01	KEY TOP	
381	9-989-284-01	KEY TOP	
382	9-989-285-01	KEY TOP	
383	9-989-286-01	KEY TOP	
384	9-989-287-01	KEY TOP	
385	9-989-288-01	KEY TOP	
386	9-989-289-01	KEY TOP	
387	9-989-290-01	KEY TOP	

(8)

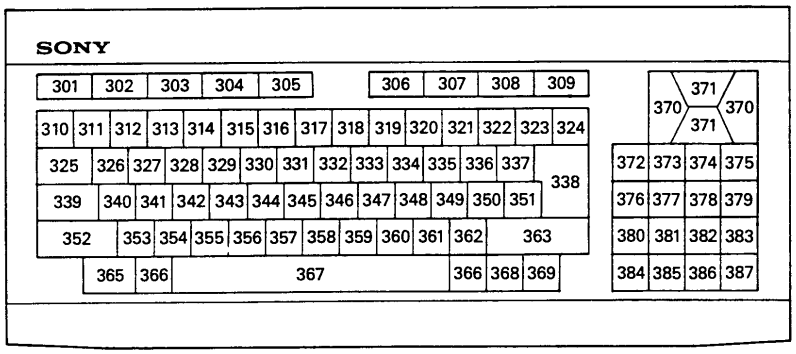

HB-F700F

No.	Part No.	Dscription	Remarks
301	9-989-209-01	KEY TOP	
302	9-989-210-01	KEY TOP	
303	9-989-211-01	KEY TOP	
304	9-989-212-01	KEY TOP	
305	9-989-213-01	KEY TOP	
306	9-989-370-01	KEY TOP	
307	9-989-215-01	KEY TOP	
308	9-989-371-01	KEY TOP	
309	9-989-217-01	KEY TOP	
310	9-989-218-01	KEY TOP	
311	9-989-372-01	KEY TOP	
312	9-989-373-01	KEY TOP	
313	9-989-374-01	KEY TOP	
314	9-989-375-01	KEY TOP	
315	9-989-376-01	KEY TOP	
316	9-989-377-01	KEY TOP	
317	9-989-378-01	KEY TOP	
318	9-989-379-01	KEY TOP	
319	9-989-380-01	KEY TOP	
320	9-989-381-01	KEY TOP	
321	9-989-382-01	KEY TOP	
322	9-989-383-01	KEY TOP	
323	9-989-384-01	KEY TOP	
324	9-989-327-01	KEY TOP	
325	9-989-233-01	KEY TOP	
326	9-989-385-01	KEY TOP	
327	9-989-386-01	KEY TOP	
328	9-989-387-01	KEY TOP	
329	9-989-331-01	KEY TOP	
330	9-989-332-01	KEY TOP	
331	9-989-333-01	KEY TOP	
332	9-989-334-01	KEY TOP	
333	9-989-335-01	KEY TOP	
334	9-989-336-01	KEY TOP	
335	9-989-337-01	KEY TOP	
336	9-989-395-01	KEY TOP	
337	9-989-396-01	KEY TOP	
338	9-989-369-01	RETVRN KEY ASSY	
339	9-989-310-01	CTRL KEY ASSY	
340	9-989-397-01	KEY TOP	
341	9-989-341-01	KEY TOP	
342	9-989-342-01	KEY TOP	
343	9-989-343-01	KEY TOP	
344	9-989-344-01	KEY TOP	
345	9-989-345-01	KEY TOP	

HB-F700F

No.	Part No.	Dscription	Remarks
346	9-989-346-01	KEY TOP	
347	9-989-347-01	KEY TOP	
348	9-989-348-01	KEY TOP	
349	9-989-406-01	KEY TOP	
350	9-989-350-01	KEY TOP	
351	9-989-351-01	KEY TOP	
352	9-989-311-01	SHIFT KEY LEFT ASSY	
353	9-989-352-01	KEY TOP	
354	9-989-353-01	KEY TOP	
355	9-989-354-01	KEY TOP	
356	9-989-355-01	KEY TOP	
357	9-989-356-01	KEY TOP	
358	9-989-357-01	KEY TOP	
359	9-989-415-01	KEY TOP	
360	9-989-416-01	KEY TOP	
361	9-989-417-01	KEY TOP	
362	9-989-418-01	KEY TOP	
363	9-989-422-01	SHIFT KEY RIGHT ASSY	
364	9-989-363-01	KEY TOP	
365	9-989-364-01	KEY TOP	
367	9-989-313-01	KEY TOP	
368	9-989-270-01	KEY TOP	
369	9-989-272-01	KEY TOP	
370	9-989-273-01	KEY TOP	
371	9-989-274-01	KEY TOP	
372	9-989-275-01	KEY TOP	
373	9-989-276-01	KEY TOP	
374	9-989-277-01	KEY TOP	
375	9-989-278-01	KEY TOP	
376	9-989-279-01	KEY TOP	
377	9-989-280-01	KEY TOP	
378	9-989-281-01	KEY TOP	
379	9-989-282-01	KEY TOP	
380	9-989-283-01	KEY TOP	
381	9-989-284-01	KEY TOP	
382	9-989-285-01	KEY TOP	
383	9-989-286-01	KEY TOP	
384	9-989-287-01	KEY TOP	
385	9-989-288-01	KEY TOP	
386	9-989-289-01	KEY TOP	
387	9-989-290-01	KEY TOP	

(9)

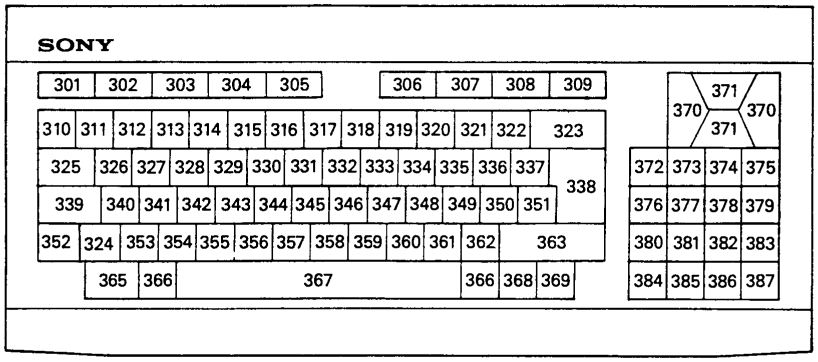

HB-F700D

No.	Part No.	Dscription	Remarks
301	9-989-209-01	KEY TOP	
302	9-989-210-01	KEY TOP	
303	9-989-211-01	KEY TOP	
304	9-989-212-01	KEY TOP	
305	9-989-213-01	KEY TOP	
306	9-989-214-01	KEY TOP	
307	9-989-215-01	KEY TOP	
308	9-989-216-01	KEY TOP	
309	9-989-217-01	KEY TOP	
310	9-989-218-01	KEY TOP	
311	9-989-941-01	KEY TOP	
312	9-989-942-01	KEY TOP	
313	9-989-943-01	KEY TOP	
314	9-989-944-01	KEY TOP	
315	9-989-945-01	KEY TOP	
316	9-989-946-01	KEY TOP	
317	9-989-947-01	KEY TOP	
318	9-989-948-01	KEY TOP	
319	9-989-949-01	KEY TOP	
320	9-989-950-01	KEY TOP	
321	9-989-951-01	KEY TOP	
322	9-989-952-01	KEY TOP	
323	9-989-953-01	KEY TOP	
324	9-989-979-01	KEY TOP	
325	9-989-233-01	KEY TOP	
326	9-989-955-01	KEY TOP	
327	9-989-956-01	KEY TOP	
328	9-989-387-01	KEY TOP	
329	9-989-331-01	KEY TOP	
330	9-989-332-01	KEY TOP	
331	9-989-333-01	KEY TOP	
332	9-989-334-01	KEY TOP	
333	9-989-335-01	KEY TOP	
334	9-989-336-01	KEY TOP	
335	9-989-337-01	KEY TOP	
336	9-989-965-01	KEY TOP	
337	9-989-966-01	KEY TOP	
338	9-989-369-01	RETVRN KEY ASSY	
339	9-989-310-01	CTRL KEY ASSY	
340	9-989-967-01	KEY TOP	
341	9-989-341-01	KEY TOP	
342	9-989-342-01	KEY TOP	
343	9-989-343-01	KEY TOP	
344	9-989-344-01	KEY TOP	
345	9-989-345-01	KEY TOP	

HB-F700D

No.	Part No.	Dscription	Remarks
346	9-989-346-01	KEY TOP	
347	9-989-347-01	KEY TOP	
348	9-989-348-01	KEY TOP	
349	9-989-976-01	KEY TOP	
350	9-989-977-01	KEY TOP	
351	9-989-978-01	KEY TOP	
352	9-990-033-01	SHIFT KEY LEFT ASSY	
353	9-989-980-01	KEY TOP	
354	9-989-353-01	KEY TOP	
355	9-989-354-01	KEY TOP	
356	9-989-355-01	KEY TOP	
357	9-989-356-01	KEY TOP	
358	9-989-357-01	KEY TOP	
359	9-989-986-01	KEY TOP	
360	9-989-987-01	KEY TOP	
361	9-989-988-01	KEY TOP	
362	9-989-989-01	KEY TOP	
363	9-989-422-01	SHIFT KEY RIGHT ASSY	
364	9-989-363-01	KEY TOP	
365	9-989-364-01	KEY TOP	
367	9-989-313-01	KEY TOP	
368	9-989-270-01	KEY TOP	
369	9-989-272-01	KEY TOP	
370	9-989-273-01	KEY TOP	
371	9-989-274-01	KEY TOP	
372	9-989-275-01	KEY TOP	
373	9-989-276-01	KEY TOP	
374	9-989-277-01	KEY TOP	
375	9-989-278-01	KEY TOP	
376	9-989-279-01	KEY TOP	
377	9-989-280-01	KEY TOP	
378	9-989-281-01	KEY TOP	
379	9-989-282-01	KEY TOP	
380	9-989-283-01	KEY TOP	
381	9-989-284-01	KEY TOP	
382	9-989-285-01	KEY TOP	
383	9-989-286-01	KEY TOP	
384	9-989-287-01	KEY TOP	
385	9-989-288-01	KEY TOP	
386	9-989-289-01	KEY TOP	
387	9-989-290-01	KEY TOP	

SECTION 8
ELECTRICAL PARTS LIST

NOTE:
- Items marked " * " are not stocked since they are seldom required for routine service. Some delay should be anticipated when ordering these items.
- If there are two or more same circuitsin a set such as a stereophonic machine, only typical circuit parts may be indicated and capacitors and resistors in other same circuits may be omitted.

CAPACITORS:
MF:μF, PF:μμF.

RESISTORS
- All resistors are in ohms.
- F : nonflammable

COILS
- MMH : mH, UH : μH

SEMICONDUCTORS
In each case, U : μ, for example:
UA...: μA..., UPA...: μPA..., UPC...: μPC, UPD...: μPD...

The components identified by shading and mark ⚠ are critical for safety. Replace only with part number specified.

Les composants identifiés par une trame et une marque ⚠ sont critiques pour la sécurité. Ne les remplacer que par une pièce portant le numéro spécifié.

ELECTRICAL PARTS

Ref.No.	Part No.	Description
901	⚠1-558-245-11	(HB-F700P/F700F/F700D)...CORD, POWER
	⚠1-558-777-11	(HB-F700S).....CORD, POWER
902	*A-8080-183-A	(HB-F700P)...MOUNTED PCB, PU-53P
	*A-8080-188-A	(HB-F700F)...MOUNTED PCB, PR-53F
	*A-8080-189-A	(HB-F700S)...MOUNTED PCB, PR-53S
	*A-8080-193-A	(HB-F700D)...MOUNTED PCB, PU-53D
903	*A-8080-186-A	(HB-F700P/F/S)...MOUNTED PCB, DUS-135
	*A-8080-195-A	(HB-F700D).....MOUNTED PCB, DUS-135D
904	1-619-764-11	PC BOARD, CN-149
905	1-619-765-11	PC BOARD, CN-150
906	1-619-766-11	PC BOARD, CN-151
907	1-619-768-11	PC BOARD, PS-133
908	1-619-769-11	PC BOARD, LE-50
909	*1-619-770-11	PC BOARD, EX-119
910	*1-464-682-11	(HB-F700F)...KEY BOARD UNIT
	*1-464-683-11	(HB-F700P)...KEY BOARD UNIT
	*1-464-684-11	(HB-F700S)...KEY BOARD UNIT
	*1-464-681-11	(HB-F700D)...KEY BOARD UNIT
911	1-550-246-11	MOUSE
BT1	1-528-171-11	BATTERY, STORAGE, NI-CD(GB50H)
C1	1-162-561-11	CERAMIC 0.1MF 16V
C2	1-162-561-11	CERAMIC 0.1MF 16V
C3	1-162-561-11	CERAMIC 0.1MF 16V
C4	1-162-561-11	CERAMIC 0.1MF 16V
C5	1-162-561-11	CERAMIC 0.1MF 16V
C6	1-162-561-11	CERAMIC 0.1MF 16V
C7	1-162-561-11	CERAMIC 0.1MF 16V
C8	1-162-561-11	CERAMIC 0.1MF 16V
C9	1-162-561-11	CERAMIC 0.1MF 16V
C10	1-162-561-11	CERAMIC 0.1MF 16V
C11	1-162-561-11	CERAMIC 0.1MF 16V
C12	1-162-561-11	CERAMIC 0.1MF 16V
C13	1-162-561-11	CERAMIC 0.1MF 16V
C14	1-162-561-11	CERAMIC 0.1MF 16V
C15	1-162-561-11	CERAMIC 0.1MF 16V
C16	1-162-561-11	CERAMIC 0.1MF 16V
C17	1-162-561-11	CERAMIC 0.1MF 16V
C18	1-162-561-11	CERAMIC 0.1MF 16V
C19	1-162-561-11	CERAMIC 0.1MF 16V
C24	1-162-561-11	CERAMIC 0.1MF 16V
C25	1-162-561-11	CERAMIC 0.1MF 16V
C26	1-136-169-00	FILM 0.22MF 5% 50V
C27	1-136-153-00	FILM 0.01MF 5% 50V
C28	1-162-561-11	CERAMIC 0.1MF 16V
C29	1-123-369-00	ELECT 4.7MF 20% 25V

ELECTRICAL PARTS

Ref.No.	Part No.	Description
C30	1-162-561-11	CERAMIC 0.1MF 16V
C31	1-123-318-00	ELECT 33MF 20% 6.3V
C32	1-162-561-11	CERAMIC 0.1MF 16V
C33	1-162-561-11	CERAMIC 0.1MF 16V
C35	1-102-074-00	CERAMIC 0.001MF 10% 50V
C36	1-136-153-00	FILM 0.01MF 5% 50V
C37	1-162-561-11	CERAMIC 0.1MF 16V
C38	1-102-958-00	CERAMIC 20PF 5% 50V
C39	1-102-958-00	CERAMIC 20PF 5% 50V
C40	1-162-561-11	CERAMIC 0.1MF 16V
C41	1-123-356-00	ELECT 10MF 20% 16V
C42	1-162-561-11	CERAMIC 0.1MF 16V
C43	1-123-646-00	ELECT 33MF 20% 6.3V
C44	1-162-561-11	CERAMIC 0.1MF 16V
C45	1-162-561-11	CERAMIC 0.1MF 16V
C46	1-162-561-11	CERAMIC 0.1MF 16V
C47	1-102-965-00	CERAMIC 39PF 5% 50V
C48	1-101-888-00	CERAMIC 68PF 5% 50V
C49	1-101-884-00	(HB-F700D)...CERAMIC 56PF 50V
C50	1-162-561-11	CERAMIC 0.1MF 16V
C51	1-102-951-00	CERAMIC 15PF 5% 50V
C52	1-123-380-00	ELECT 1MF 20% 50V
C53	1-162-561-11	CERAMIC 0.1MF 16V
C301	1-162-561-11	CERAMIC 0.1MF 16V
C302	1-123-307-00	ELECT 100MF 20% 10V
C303	1-102-959-00	CERAMIC 22PF 5% 50V
C304	1-162-561-11	CERAMIC 0.1MF 16V
C305	1-162-561-11	CERAMIC 0.1MF 16V
C306	1-162-561-11	CERAMIC 0.1MF 16V
C307	1-162-561-11	CERAMIC 0.1MF 16V
C308	1-162-561-11	CERAMIC 0.1MF 16V
C309	1-123-369-00	ELECT 4.7MF 20% 25V
C310	1-123-379-00	ELECT 0.47MF 20% 50V
C311	1-123-369-00	ELECT 4.7MF 20% 25V
C312	1-123-308-00	ELECT 220MF 20% 10V
C313	1-123-307-00	ELECT 100MF 20% 10V
C314	1-123-307-00	ELECT 100MF 20% 10V
C315	1-123-307-00	ELECT 100MF 20% 10V
C316	1-102-978-00	CERAMIC 220PF 5% 50V
C317	1-123-332-00	ELECT 47MF 20% 16V
C318	1-123-369-00	ELECT 4.7MF 20% 25V
C319	1-123-369-00	ELECT 4.7MF 20% 25V
C320	1-123-369-00	ELECT 4.7MF 20% 25V
C321	1-123-332-00	ELECT 47MF 20% 16V
C322	1-136-173-00	FILM 0.47MF 5% 50V
C323	1-162-561-11	CERAMIC 0.1MF 16V

ELECTRICAL PARTS

Ref.No.	Part No.	Description			
C324	1-162-561-11	CERAMIC	0.1MF		16V
C325	1-123-310-00	ELECT	470MF	20%	10V
C326	1-123-310-00	ELECT	470MF	20%	10V
C327	1-123-310-00	ELECT	470MF	20%	10V
C328	1-123-310-00	ELECT	470MF	20%	10V
C329	1-123-310-00	ELECT	470MF	20%	10V
C330	1-123-332-00	ELECT	47MF	20%	16V
C331	1-136-171-00	FILM	0.33MF	5%	50V
C332	1-102-074-00	CERAMIC	0.001MF	10%	50V
C333	1-102-074-00	CERAMIC	0.001MF	10%	50V
C334	1-106-188-00	MYLAR	0.0047MF	10%	50V
C335	1-123-369-00	ELECT	4.7MF	20%	25V
C336	1-123-380-00	ELECT	1MF	20%	50V
C337	1-123-369-00	ELECT	4.7MF	20%	25V
C401	1-163-189-11	CERAMIC CHIP	220PF		50V
C402	1-163-199-11	CERAMIC CHIP	560PF		50V
C403	1-163-053-11	CERAMIC CHIP	0.0033MF		50V
C404	9-989-169-01	CERAMIC	0.1		50V
C405	1-163-047-11	CERAMIC CHIP	0.001MF		50V
C406	1-216-051-11	CERAMIC CHIP	0.0022MF		50V
C407	9-989-169-01	CERAMIC	0.1		50V
C408	9-989-169-01	CERAMIC	0.1		50V
C409	9-989-170-01	ELECT	47		16V
C410	1-163-059-11	CERAMIC CHIP	0.01MF		50V
C411	1-163-078-11	CERAMIC CHIP	0.033MF		50V
C414	9-989-170-01	ELECT	470		16V
C415	9-989-171-01	ELECT	2.2		50V
C416	9-989-172-01	ELECT	22		50V
C417	1-163-059-11	CERAMIC CHIP	0.01MF		50V
C418	1-124-245-11	ELECT	4.7MF		35V
C419	1-124-258-11	ELECT	3.3MF		50V
C420	1-124-240-11	ELECT	10MF		25V
C421	1-124-253-11	ELECT	0.47MF		50V
C422	1-124-253-11	ELECT	0.47MF		50V
C423	1-124-253-11	ELECT	0.47MF		50V
C424	1-124-253-11	ELECT	0.47MF		50V
C425	1-130-522-11	FILM	0.033MF		
C426	1-124-253-11	ELECT	0.47MF		50V
C501	1-123-306-00	ELECT	47MF	20%	6.3V
C502	1-161-974-00	CERAMIC	0.1MF	20%	16V
C503	1-123-369-00	ELECT	4.7MF	20%	25V
C504	1-161-974-00	CERAMIC	0.1MF	20%	16V
C505	1-161-974-00	CERAMIC	0.1MF	20%	16V
C506	1-123-306-00	ELECT	47MF	20%	6.3V
C507	1-161-974-00	CERAMIC	0.1MF	20%	16V
C508	1-123-369-00	ELECT	4.7MF	20%	25V
C509	1-161-974-00	CERAMIC	0.1MF	20%	16V
C510	1-161-974-00	CERAMIC	0.1MF	20%	16V
C701	9-990-877-01	TANTAL	2.2MF		
C702	9-990-875-01	ELECT	47MF		6.3V
C703	9-990-875-01	ELECT	47MF		6.3V
C901	1-136-171-00	FILM	0.33MF	5%	50V
C902	1-136-171-00	FILM	0.33MF	5%	50V
C903	1-123-333-00	ELECT	100MF	20%	16V
C904	1-123-307-00	ELECT	100MF	20%	10V
C905	1-124-772-11	ELECT	10000MF	20%	25V
C906	1-161-742-00	CERAMIC	0.0022MF	20%	400V
C907	1-123-333-00	ELECT	100MF	20%	16V
C908	1-136-171-00	FILM	0.33MF	5%	50V

ELECTRICAL PARTS

Ref.No.	Part No.	Description			
C909	1-125-413-00	ELECT(BLOCK)	22000MF	20%	16V
C910	1-101-005-00	CERAMIC	0.022MF		50V
C911	1-136-211-00	FILM	0.022MF	20%	250V
C912	1-123-348-00	ELECT	470MF	20%	35V
C913	1-101-005-00	CERAMIC	0.022MF		50V
C914	1-101-005-00	CERAMIC	0.022MF		50V
C915	1-136-211-00	FILM	0.022MF	20%	250V
C916	1-101-005-00	CERAMIC	0.022MF		50V
C917	1-101-005-00	CERAMIC	0.022MF		50V
C918	1-101-005-00	CERAMIC	0.022MF		50V
C919	1-101-005-00	CERAMIC	0.022MF		50V
CF1	1-235-056-21	(HB-F700D)...FILTER, LINE			
CF2	1-235-056-21	(HB-F700D)...FILTER, LINE			
CF3	1-235-056-21	(HB-F700D)...FILTER, LINE			
CF4	1-421-752-21	(HB-F700D)...FILTER, NOISE			
CF5	1-235-056-21	(HB-F700D)...FILTER, LINE			
CF6	1-235-056-21	(HB-F700D)...FILTER, LINE			
CF7	1-235-056-21	(HB-F700D)...FILTER, LINE			
CF8	1-235-056-21	(HB-F700D)...FILTER, LINE			
CF9	1-235-056-21	(HB-F700D)...FILTER, LINE			
CF10	1-235-056-21	(HB-F700D)...FILTER, LINE			
CF11	1-235-056-21	(HB-F700D)...FILTER, LINE			
CF12	1-235-056-21	(HB-F700D)...FILTER, LINE			
CF13	1-235-056-21	(HB-F700D)...FILTER, LINE			
CF301	1-421-752-21	(HB-F700D)...FILTER, NOISE			
CF302	1-421-752-21	(HB-F700D)...FILTER, NOISE			
CF303	1-421-752-21	(HB-F700D)...FILTER, NOISE			
CF304	1-421-752-21	(HB-F700D)...FILTER, NOISE			
CN1	*1-562-877-11	RECEPTACLE, MULTI CONNECTOR 50P			
CN5	1-563-005-31	CONNECTOR 14P			
CN8	*1-562-564-11	SOCKET, CONNECTOR 8P			
CN9	*1-562-251-00	SOCKET, CONNECTOR 6P			
CN10	*1-562-251-00	SOCKET, CONNECTOR 6P			
CN11	*1-562-327-00	SOCKET, CONNECTOR 3P			
CN13	*1-564-376-11	PIN, CONNECTOR			
CN14	1-506-948-11	PIN, CONNECTOR 34P			
CN16	1-564-372-00	PIN, CONNECTOR 9P			
CN17	1-564-372-00	PIN, CONNECTOR 9P			
CN20	*1-563-436-11	CONNECTOR, MULTI 34P			
CN23	1-563-111-11	JACK 13P			
CN301	*1-564-241-00	PIN, CONNECTOR 4P			
CN302	*1-506-611-11	PIN, CONNECTOR 8P			
CN303	*1-506-947-11	PIN, CONNECTOR 6P			
CN304	*1-506-945-11	PIN, CONNECTOR 3P			
CN305	*1-506-944-11	PIN, CONNECTOR 2P			
CN306	*1-506-947-11	PIN, CONNECTOR 6P			
CN307	1-561-468-00	SOCKET, CONNECTOR (DIN8P)			
CN308	1-562-121-00	CONNECTOR, DIN 6P			
CN309	1-561-468-00	SOCKET, CONNECTOR (DIN8P)			
CN310	*1-506-944-11	PIN, CONNECTOR 2P			
CN311	*1-564-241-00	PIN, CONNECTOR 4P			
CN501	1-562-383-00	SOCKET, CONNECTOR			
CN502	1-562-383-00	SOCKET, CONNECTOR			
CN503	*1-562-728-11	CONNECTOR, MULTI 50P			
CN901	*1-564-242-00	PIN, CONNECTOR 5P			
CV1	1-141-304-21	TRIMMER, CERAMIC			
CV301	1-141-254-00	CAP, TRIMMER			
D1	8-719-101-49	DIODE RD5.1E-L1			
D2	8-719-200-29	DIODE 11DQ04			
D3	8-719-911-19	DIODE 1SS119			

ELECTRICAL PARTS

Ref.No.	Part No.	Description
D4	8-719-911-19	DIODE 1SS119
D5	8-719-911-19	DIODE 1SS119
D6	8-719-911-19	DIODE 1SS119
D7	8-719-908-57	DIODE SVC203
D301	8-719-200-77	DIODE 10E2N
D302	8-719-911-19	DIODE 1SS119
D303	8-719-911-19	DIODE 1SS119
D304	8-719-911-19	DIODE 1SS119
D401	8-719-100-05	DIODE 1S2837
D402	9-989-197-01	DIODE LED4
D601	8-719-934-35	DIODE BR3432S
D602	8-719-815-55	DIODE 1S1555
D603	8-719-815-55	DIODE 1S1555
D604	8-719-815-55	DIODE 1S1555
D701	9-990-867-01	DIODE EL23F
D702	9-990-867-01	DIODE EL23F
D703	9-990-867-01	DIODE EL23F
D704	9-990-867-01	DIODE EL23F
D705	8-719-400-82	DIODE MA3100M
D706	8-719-400-82	DIODE MA3100M
D707	8-719-911-19	DIODE 1SS119
D901	8-719-011-55	DIODE U05G
D902	8-719-200-77	DIODE 10E2N
D903	8-719-011-55	DIODE U05G
D904	8-719-500-09	DIODE D5FB20F
D905	8-719-912-43	DIODE TLG124A
F901	⚠1-532-284-11	FUSE T630mA
FB	1-543-274-21	(HB-F700D)...BAND FERRITE
IC1	8-759-903-67	IC SN74LS367AN
IC2	8-759-903-67	IC SN74LS367AN
IC3	8-759-900-08	IC SN74LS08N
IC4	8-759-900-32	IC SN74LS32N
IC5	8-759-111-42	(HB-F700S)...IC UPD23C256EC-156
IC5	8-759-925-62	(HB-F700P)...IC MB83256-251
IC5	8-759-927-68	(HB-F700F)...IC MB83256-253
IC5	8-759-938-81	(HB-F700D)...IC MSM38256-U0RS
IC6	8-759-111-43	(HB-F700S)...IC UPD23C256EC-157
IC6	8-759-925-61	(HB-F700P)...IC MB83256-256
IC6	8-759-927-69	(HB-F700F)...IC MB83256-254
IC6	8-759-938-82	(HB-F700D)...IC MSM38256-U2RS
IC7	8-759-901-39	IC SN74LS139N
IC8	8-759-922-42	IC MB81464-12
IC9	8-759-922-42	IC MB81464-12
IC10	8-759-922-42	IC MB81464-12
IC11	8-759-922-42	IC MB81464-12
IC12	8-759-903-67	IC SN74LS367AN
IC13	8-759-903-67	IC SN74LS367AN
IC14	8-759-916-80	IC LH0080A
IC15	8-759-900-32	IC SN74LS32N
IC16	8-759-900-00	IC SN74LS00N
IC17	8-759-901-57	IC SN74LS157N
IC18	8-759-922-42	IC MB81464-12
IC19	8-759-922-42	IC MB81464-12
IC20	8-759-906-45	IC SN74LS645N
IC21	8-759-900-30	IC SN74LS30N
IC22	8-759-901-57	IC SN74LS157N
IC23	8-759-922-42	IC MB81464-12
IC24	8-759-922-42	IC MB81464-12

ELECTRICAL PARTS

Ref.No.	Part No.	Description
IC25	8-759-933-46	IC S1985
IC26	8-759-900-04	IC SN74LS04N
IC27	8-759-903-73	IC SN74LS373N
IC28	8-759-903-67	IC SN74LS367AN
IC29	8-759-903-67	IC SN74LS367AN
IC30	8-759-922-98	IC CXD1032Q
IC31	8-759-911-41	IC TL431CP
IC32	8-759-974-69	IC TMS2793NL
IC33	8-759-900-38	IC SN74LS38N
IC34	8-759-974-06	IC SN7406N
IC35	8-759-902-44	IC SN74LS244N
IC301	8-759-922-51	IC V9938
IC302	8-759-922-42	IC MB81464-12
IC303	8-759-922-42	IC MB81464-12
IC304	8-759-922-42	IC MB81464-12
IC305	8-759-922-42	IC MB81464-12
IC306	8-759-131-11	IC UPC311C
IC307	8-759-700-14	IC NJM78M09A
IC401	9-989-165-01	IC M51017AP
IC402	8-759-303-01	IC HA13421
IC403	8-759-900-93	IC SN74LS93N
IC601	8-759-900-05	IC SN74LS05
IC602	8-759-901-45	IC SN74LS145N
IC603	8-759-901-75	IC SN74LS175N
IC604	8-759-903-67	IC SN74LS367
IC701	9-988-485-01	IC LA6339M
IC702	9-990-870-01	IC MB882101518M
IC901	8-749-931-22	IC SI3122V
IC902	8-749-930-52	IC SI3052V
IC903	8-759-700-69	IC NJM79L12A
L1	1-408-413-00	MICRO INDUCTOR 22UH
L301	1-408-413-00	MICRO INDUCTOR 22UH
L302	1-408-413-00	MICRO INDUCTOR 22UH
L303	1-408-413-00	MICRO INDUCTOR 22UH
L304	1-408-413-00	MICRO INDUCTOR 22UH
L401	9-989-168-01	COIL 330MH
L402	9-989-168-01	COIL 330MH
L701	9-990-876-01	COIL 22MH
L901	1-421-895-11	COIL, SU
M401	9-989-207-01	STEPPING MOTOR
PH401	9-911-127-01	PHOTO INTERRUPTER GP2S06
PH402	9-911-127-01	PHOTO INTERRUPTER GP2S06
PS401	1-532-679-11	IC PROTECTOR
Q1	8-729-117-54	TRANSISTOR 2SA1175
Q301	8-729-606-33	TRANSISTOR 2SC2603-F
Q302	8-729-117-54	TRANSISTOR 2SA1175
Q303	8-729-606-33	TRANSISTOR 2SC2603-F
Q304	8-729-606-33	TRANSISTOR 2SC2603-F
Q305	8-729-606-33	TRANSISTOR 2SC2603-F
Q306	8-729-606-33	TRANSISTOR 2SC2603-F
Q307	8-729-606-33	TRANSISTOR 2SC2603-F
Q308	8-729-606-33	TRANSISTOR 2SC2603-F
Q309	8-729-606-33	TRANSISTOR 2SC2603-F
Q310	8-729-606-33	TRANSISTOR 2SC2603-F
Q311	8-729-606-33	TRANSISTOR 2SC2603-F

The components identified by shading and mark ⚠ are critical for safety. Replace only with part number specified.

Les composants identifiés par une trame et une marque ⚠ sont critiques pour la sécurité. Ne les remplacer que par une pièce portant le numéro spécifié.

ELECTRICAL PARTS

Ref.No.	Part No.	Description
Q312	8-729-117-54	TRANSISTOR 2SA1175
Q313	8-729-900-36	TRANSISTOR DTC124ES
Q314	8-729-900-36	TRANSISTOR DTC124ES
Q407	8-729-901-00	TRANSISTOR DTC124EK
Q410	8-729-901-00	TRANSISTOR DTC124EK
Q411	8-729-901-00	TRANSISTOR DTC124EK
Q412	8-729-901-00	TRANSISTOR DTC124EK
Q413	9-991-128-01	TRANSISTOR RT1N441C
Q414	8-729-901-00	TRANSISTOR DTC124EK
Q415	8-729-900-53	TRANSISTOR DTC114EK
Q420	8-729-901-00	TRANSISTOR DTC124EK
Q421	8-729-901-11	TRANSISTOR DTC124EK
Q422	8-729-902-11	TRANSISTOR 2SC2021
Q423	8-729-901-00	TRANSISTOR DTC124EK
Q701	9-990-868-01	TRANSISTOR ST23F
Q702	9-990-868-01	TRANSISTOR ST23F
Q703	9-990-868-01	TRANSISTOR ST23F
Q704	9-990-868-01	TRANSISTOR ST23F
Q705	1-806-827-11	TRANSISTOR 2SC2405
R1	1-247-855-00	CARBON 10K 5% 1/6W
R2	1-247-855-00	CARBON 10K 5% 1/6W
R8	1-247-831-00	CARBON 1K 5% 1/6W
R9	1-247-836-00	CARBON 1.6K 5% 1/6W
R10	1-247-842-00	CARBON 3K 5% 1/6W
R11	1-247-815-00	CARBON 220 5% 1/6W
R12	1-249-441-11	CARBON 100K 5% 1/6W
R13	1-247-847-00	CARBON 4.7K 5% 1/6W
R14	1-247-855-00	CARBON 10K 5% 1/6W
R15	1-247-855-00	CARBON 10K 5% 1/6W
R16	1-247-855-00	CARBON 10K 5% 1/6W
R17	1-247-855-00	CARBON 10K 5% 1/6W
R18	1-247-855-00	CARBON 10K 5% 1/6W
R19	1-247-855-00	CARBON 10K 5% 1/6W
R20	1-247-855-00	CARBON 10K 5% 1/6W
R21	1-249-441-11	CARBON 100K 5% 1/6W
R22	1-247-855-00	CARBON 10K 5% 1/6W
R23	1-247-847-00	CARBON 4.7K 5% 1/6W
R24	1-247-847-00	CARBON 4.7K 5% 1/6W
R25	1-247-855-00	CARBON 10K 5% 1/6W
R26	1-247-903-00	CARBON 1M 5% 1/6W
R27	1-247-831-00	CARBON 1K 5% 1/6W
R28	1-247-831-00	CARBON 1K 5% 1/6W
R29	1-247-831-00	CARBON 1K 5% 1/6W
R30	1-247-831-00	CARBON 1K 5% 1/6W
R31	1-247-831-00	CARBON 1K 5% 1/6W
R32	1-247-831-00	CARBON 1K 5% 1/6W
R33	1-247-855-00	CARBON 10K 5% 1/6W
R34	1-249-419-11	CARBON 1.5K 5% 1/6W
R35	1-247-855-00	CARBON 10K 5% 1/6W
R36	1-247-823-00	CARBON 470 5% 1/6W
R37	1-247-871-00	CARBON 47K 5% 1/6W
R38	1-249-441-11	CARBON 100K 5% 1/6W
R39	1-249-423-11	CARBON 3.3K 5% 1/6W
R40	1-247-855-00	CARBON 10K 5% 1/6W
R48	1-247-847-00	CARBON 4.7K 5% 1/6W
R50	1-249-447-11	(HB-F700P/F700F/F700S) ...CARBON 1 5% 1/4W
R51	1-249-447-11	(HB-F700P/F700F/F700S) ...CARBON 1 5% 1/4W

ELECTRICAL PARTS

Ref.No.	Part No.	Description
R52	1-249-447-11	(HB-F700P/F700F/F700S) ...CARBON 1 5% 1/4W
R53	1-249-447-11	(HB-F700P/F700F/F700S) ...CARBON 1 5% 1/4W
R54	1-249-447-11	(HB-F700P/F700F/F700S) ...CARBON 1 5% 1/4W
R55	1-249-447-11	(HB-F700P/F700F/F700S) ...CARBON 1 5% 1/4W
R56	1-249-447-11	(HB-F700P/F700F/F700S) ...CARBON 1 5% 1/4W
R57	1-249-447-11	(HB-F700P/F700F/F700S) ...CARBON 1 5% 1/4W
R301	1-247-895-00	CARBON 470K 5% 1/6W
R302	1-247-791-00	CARBON 22 5% 1/6W
R303	1-247-791-00	CARBON 22 5% 1/6W
R304	1-247-791-00	CARBON 22 5% 1/6W
R305	1-247-791-00	CARBON 22 5% 1/6W
R306	1-247-871-00	CARBON 47K 5% 1/6W
R307	1-247-839-00	CARBON 2.2K 5% 1/6W
R308	1-247-839-00	CARBON 2.2K 5% 1/6W
R309	1-247-839-00	CARBON 2.2K 5% 1/6W
R310	1-247-839-00	CARBON 2.2K 5% 1/6W
R311	1-249-441-11	CARBON 100K 5% 1/6W
R312	1-247-819-00	CARBON 330 5% 1/6W
R313	1-247-815-00	CARBON 220 5% 1/6W
R314	1-249-423-11	CARBON 3.3K 5% 1/6W
R315	1-247-895-00	CARBON 470K 5% 1/6W
R316	1-247-839-00	CARBON 2.2K 5% 1/6W
R317	1-249-441-11	CARBON 100K 5% 1/6W
R318	1-247-831-00	CARBON 1K 5% 1/6W
R319	1-247-823-00	CARBON 470 5% 1/6W
R320	1-247-823-00	CARBON 470 5% 1/6W
R321	1-247-823-00	CARBON 470 5% 1/6W
R322	1-247-831-00	CARBON 1K 5% 1/6W
R323	1-247-857-00	CARBON 12K 5% 1/6W
R324	1-247-831-00	CARBON 1K 5% 1/6W
R325	1-247-857-00	CARBON 12K 5% 1/6W
R326	1-247-831-00	CARBON 1K 5% 1/6W
R327	1-247-857-00	CARBON 12K 5% 1/6W
R328	1-247-831-00	CARBON 1K 5% 1/6W
R329	1-247-831-00	CARBON 1K 5% 1/6W
R330	1-247-831-00	CARBON 1K 5% 1/6W
R331	1-247-783-00	CARBON 10 5% 1/6W
R332	1-249-433-11	CARBON 22K 5% 1/6W
R333	1-247-823-00	CARBON 470 5% 1/6W
R334	1-247-859-00	CARBON 15K 5% 1/6W
R335	1-249-422-11	CARBON 2.7K 5% 1/6W
R336	1-249-422-11	CARBON 2.7K 5% 1/6W
R337	1-249-422-11	CARBON 2.7K 5% 1/6W
R339	1-247-857-00	CARBON 12K 5% 1/6W
R340	1-249-420-11	CARBON 1.8K 5% 1/6W
R341	1-249-423-11	CARBON 3.3K 5% 1/6W
R342	1-247-853-00	CARBON 8.2K 5% 1/6W
R343	1-249-434-11	CARBON 27K 5% 1/6W
R344	1-247-839-00	CARBON 2.2K 5% 1/6W
R345	1-249-434-11	CARBON 27K 5% 1/6W
R346	1-247-839-00	CARBON 2.2K 5% 1/6W
R347	1-249-434-11	CARBON 27K 5% 1/6W
R348	1-247-839-00	CARBON 2.2K 5% 1/6W
R349	1-247-839-00	CARBON 2.2K 5% 1/6W

ELECTRICAL PARTS

Ref.No.	Part No.	Description			
R350	1-249-422-11	CARBON	2.7K	5%	1/6W
R351	1-247-809-00	CARBON	120	5%	1/6W
R352	1-247-809-00	CARBON	120	5%	1/6W
R353	1-247-811-00	CARBON	150	5%	1/6W
R354	1-247-811-00	CARBON	150	5%	1/6W
R355	1-247-811-00	CARBON	150	5%	1/6W
R356	1-247-819-00	CARBON	330	5%	1/6W
R357	1-249-433-11	CARBON	22K	5%	1/6W
R358	1-247-831-00	CARBON	1K	5%	1/6W
R359	1-247-804-00	CARBON	75	5%	1/6W
R360	1-247-804-00	CARBON	75	5%	1/6W
R361	1-247-804-00	CARBON	75	5%	1/6W
R362	1-247-804-00	CARBON	75	5%	1/6W
R363	1-247-804-00	CARBON	75	5%	1/6W
R364	1-247-847-00	CARBON	4.7K	5%	1/6W
R365	1-249-433-11	CARBON	22K	5%	1/6W
R366	1-247-795-00	CARBON	33	5%	1/6W
R367	1-247-831-00	CARBON	1K	5%	1/6W
R368	1-247-805-00	CARBON	82	5%	1/6W
R369	1-247-804-00	CARBON	75	5%	1/6W
R371	1-247-831-00	CARBON	1K	5%	1/6W
R372	1-247-813-00	CARBON	180	5%	1/6W
R373	1-247-831-00	CARBON	1K	5%	1/6W
R374	1-247-831-00	CARBON	1K	5%	1/6W
R375	1-247-871-00	CARBON	47K	5%	1/6W
R376	1-247-855-00	CARBON	10K	5%	1/6W
R377	1-247-855-00	CARBON	10K	5%	1/6W
R401	1-216-214-11	CARBON CHIP	4.7K		1/8W
R402	1-216-216-11	CARBON CHIP	5.6K		
R403	1-216-166-11	CARBON CHIP	47		
R406	1-216-195-11	CARBON CHIP	750		
R407	1-216-190-11	CARBON CHIP	470		
R408	1-216-190-11	CARBON CHIP	470		
R409	1-216-214-11	CARBON CHIP	4.7K		1/8W
R410	1-216-222-11	CARBON CHIP	10K		
R411	9-989-175-01	CARBON	240		
R412	1-216-219-11	CARBON CHIP	7.5K		
R413	1-216-240-11	CARBON CHIP	56K		
R414	1-216-236-11	CARBON CHIP	39K		
R417	1-216-222-11	CARBON CHIP	10K		
R418	1-216-230-11	CARBON CHIP	22K		
R419	1-216-216-11	CARBON CHIP	5.6K		
R425	1-216-178-11	CARBON CHIP	150		
R426	1-216-216-11	CARBON CHIP	5.6K		
R433	1-216-198-11	CARBON CHIP	1K		
R434	9-989-173-01	CARBON	1K		
R439	9-989-173-01	CARBON	1K		
R440	1-216-242-11	CARBON CHIP	68K		
R443	1-216-214-11	CARBON CHIP	4.7K		1/8W
R445	1-216-216-11	CARBON CHIP	5.6K		
R447	1-216-216-11	CARBON CHIP	5.6K		
R448	1-216-242-11	CARBON CHIP	68K		
R453	1-216-246-11	CARBON CHIP	100K		
R455	1-216-216-11	CARBON CHIP	5.6K		
R456	1-216-216-11	CARBON CHIP	5.6K		
R458	1-216-216-11	CARBON CHIP	5.6K		
R459	9-991-126-01	CARBON	180		

ELECTRICAL PARTS

Ref.No.	Part No.	Description			
R460	1-216-216-11	CARBON CHIP	5.6K		
R463	1-216-178-11	CARBON CHIP	150		
R464	1-216-230-11	CARBON CHIP	22K		
R467	1-246-446-15	CARBON	75		1/4W
R468	1-246-469-15	CARBON	680		1/4W
R469	1-246-523-15	CARBON	120K		1/4W
R470	1-246-466-15	CARBON	510		1/4W
R471	1-246-506-15	CARBON	2.4K		1/4W
R472	1-246-401-15	CARBON	1.2		1/4W
R473	1-246-503-15	CARBON	18K		1/4W
R501	1-249-433-11	CARBON	22K	5%	1/6W
R502	1-247-855-00	CARBON	10K	5%	1/6W
R503	1-249-433-11	CARBON	22K	5%	1/6W
R504	1-247-855-00	CARBON	10K	5%	1/6W
R701	1-216-186-11	CARBON CHIP	330		
R702	1-216-186-11	CARBON CHIP	330		
R703	1-216-206-11	CARBON CHIP	2.2K		
R704	1-216-206-11	CARBON CHIP	2.2K		
R705	1-216-206-11	CARBON CHIP	2.2K		
R706	1-216-206-11	CARBON CHIP	2.2K		
R707	1-216-222-11	CARBON CHIP	10K		
R708	1-216-256-11	CARBON CHIP	270K		
R709	1-246-521-35	CARBON	100K		1/4W
R710	1-216-246-11	CARBON CHIP	100K		
R711	1-216-210-11	CARBON CHIP	3.3K		
R712	1-216-210-11	CARBON CHIP	3.3K		
R713	1-216-246-11	CARBON CHIP	100K		
R714	1-216-210-11	CARBON CHIP	100K		
R715	1-216-210-11	CARBON CHIP	100K		
R716	1-216-238-11	CARBON CHIP	47K		
R717	1-216-222-11	CARBON CHIP	10K		
R718	1-216-214-11	CARBON CHIP	4.7K		
R719	1-246-521-35	CARBON	100K		1/4W
RB1	1-235-724-11	RES, ENCAPSULATED CERMET			
RB2	1-235-724-11	RES, ENCAPSULATED CERMET			
RB3	1-235-728-11	RES, ENCAPSULATED CERMET			
RV1	1-226-774-00	RES, ADJ, METAL GLAZE 47K			
RV2	1-230-523-11	RES, ADJ, METAL GLAZE 10K			
RV301	1-230-520-11	RES, ADJ, METAL GLAZE 1K			
RV302	1-230-520-11	RES, ADJ, METAL GLAZE 1K			
RV303	1-230-520-11	RES, ADJ, METAL GLAZE 1K			
RY301	1-515-520-00	RELAY			
S1	1-553-522-00	SWITCH, PUSH (RESET)			
S701	9-990-872-01	SWITCH			
S702	9-990-872-01	SWITCH			
S901	⚠1-553-318-00	SWITCH, PUSH (AC POWER)(1 KEY)			
T901	⚠1-448-626-11	TRANSFORMER, POWER			
TH1	1-800-198-XX	THERMISTOR S-1K			
X1	1-567-098-00	VIBRATOR, CRYSTAL (32.768kHz)			
X2	1-527-726-00	VIBRATOR, CRYSTAL (4MHz)			
X301	1-567-530-11	VIBRATOR, CRYSTAL (21.477MHz)			
X701	9-990-871-01	CRYSTAL			

The components identified by shading and mark ⚠ are critical for safety. Replace only with part number specified.

Les composants identifiés par une trame et une marque ⚠ sont critiques pour la sécurité. Ne les remplacer que par une pièce portant le numéro spécifié.

ACCESSORY & PACKING MATERIAL

Part No.	Description
1-550-246-11	MOUSE
1-557-759-11	CABLE, AUDIO VIDEO CONNECTION
3-701-619-00	BAG, POLYETHYLENE, STANDARD
3-701-624-00	BAG, POLYETHYLENE
3-701-630-00	BAG, POLYETHYLENE
*3-764-300-11	(HB-F700P)...CHART, REFERENCE
*3-764-300-32	(HB-F700F)...CHART, REFERENCE
*3-764-300-52	(HB-F700D)...CHART, REFERENCE
3-764-301-32	(HB-F700F)...MANUAL, MSX-BASIC VERSION(2.0)
3-764-301-52	(HB-F700D)...MANUAL, MSX-BASIC VERSION(2.0)
3-764-318-32	(HB-F700D)...MANUAL, MSX-BASIC VERSION(2.0)
3-764-622-11	(HB-F700P)...GUIDE, HIBRID USERS
3-764-622-51	(HB-F700D)...GUIDE, HIBRID USERS
3-764-622-71	(HB-F700P)...GUIDE, HIBRID USERS
3-764-622-81	(HB-F700D)...GUIDE, HIBRID USERS
3-765-517-11	(HB-F700P)...MANUAL, INSTRUCTION
3-765-517-42	(HB-F700F)...MANUAL, INSTRUCTION
3-765-517-51	(HB-F700D)...MANUAL, INSTRUCTION
3-765-517-61	(HB-F700S)...MANUAL, INSTRUCTION
4-608-311-01	CUSHION (KEYBOARD LEFT)
4-608-312-01	CUSHION (KEYBOARD RIGHT)
4-608-940-01	SPACER
4-608-941-01	CUSHION (MAIN RIGHT)
4-608-942-01	CUSHION (MAIN LEFT)
4-609-321-51	(HB-F700P)...INDIVIDUAL CARTON
4-609-321-61	(HB-F700S)...INDIVIDUAL CARTON
4-609-321-71	(HB-F700F)...INDIVIDUAL CARTON
4-609-321-81	(HB-F700D)...INDIVIDUAL CARTON
4-609-356-01	SHEET, PROTECTION
4-832-728-00	SHEET, PROTECTION

SERVICE MANUAL

AEP Model

No. 1
April, 1987

CORRECTION

File this correction with the service manual.

See page 78

Incorrect			Correct		
PH401	9-911-127-01	PHOTO INTERRUPTER GP2S06	PH401	9-991-127-01	PHOTO INTERRUPTER GP2S06
PH402	9-911-127-01	PHOTO INTERRUPTER GP2S06	PH402	9-991-127-01	PHOTO INTERRUPTER GP2S06

MICROFILM
9-952-495-81

Sony Corporation
Audio Group

HOME COMPUTER
SONY®

English
87E0240-1
Printed in Japan
© 1987. 5