A Report on

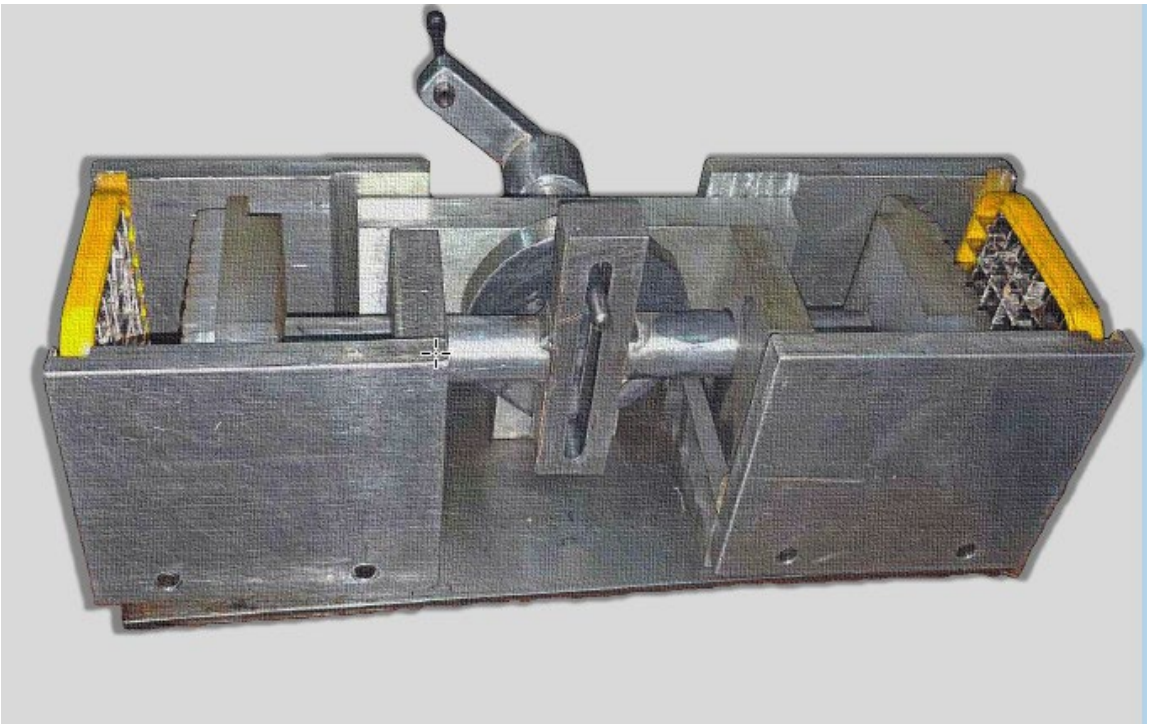

# Dual Sided Vegetable Cutter (Using Scotch Yoke Mechanism)

**Date of Submission:** 04 March, 2024

# Bangladesh University of Engineering and Technology

## IPE 318
## Product Design II Sessional

**Final Report on**

**Dual Sided Vegetable Cutter (Using Scotch Yoke Mechanism)**

**Submitted to:**

**Dr. Kais Bin Zaman**

Professor

Department of Industrial and Production Engineering, BUET

**Dr. A.B.M Mainul Bari**

Assistant Professor

Department of Industrial and Production Engineering, BUET

**Zahin Ar Rafi**

Lecturer

Department of Industrial and Production Engineering, BUET

**Submitted by:** Group $A_{23}$

Aniqa Tahsin - 1908039

Md. Tawfique Ihsan - 1908040

Shakil Ahmed - 1908041

Mohiuddin Adnan - 1908042

Sadat Iqbal Priom - 1908043

Md. Rabby Shajin Islam - 1908044

# COPYRIGHT NOTICE

All rights reserved; no parts of this publication may be reproduced or transmitted by means, electronic, mechanical, photocopying or otherwise, without the prior permission of the department of Industrial and Production Engineering, BUET.

# FORWARDING LETTER

Date: 04 March, 2024

Dr. Kais Bin Zaman

Professor

Dr. A.B.M Mainul Bari

Assistant Professor

Zahin Ar Rafi

Lecturer

Department of Industrial and Production Engineering, BUET

**Subject:** Report Submission on "Dual-Sided Vegetable Cutter (Using Scotch-Yoke Mechanism)

Honorable teachers,

We are pleased to present the report entitled "Dual-Sided Vegetable Cutter (Using Scotch-Yoke Mechanism)" to you. We are very thankful to you for your kind help in accomplishing this product design project. Available vegetable cutters are made of cheap materials and poor design with low efficiency. Hence, we tried to develop a cutter with high efficiency and throughput with aesthetic design. Moreover, there is a detachable mechanism of the blade to create versatility in the cutter. This report showed the functions, working processes, manufacturing processes, and overall cost of the dual-sided vegetable cutter.

We would like to thank you for your cooperation in completing this project. We solemnly apologize for the involuntary mistakes, if there are any.

Sincerely

Aniqa Tahsin (Student ID: 1908039)

Md. Tawfique Ihsan (Student ID: 1908040)

Shakil Ahmed (Student ID: 1908041)

Mohiuddin Adnan (Student ID: 1908042)

Sadat Iqbal Priom (Student ID: 1908043)

Md. Rabby Shajin Islam (Student ID: 1908044)

# PREFACE

Dear Reader,

In the sessional course Product Design I, we learned how to formulate a product and conduct corresponding analyses to manufacture the product. This report provides a comprehensive overview of our product "Dual Sided Vegetable Cutter". The report is a part of our coursework at Bangladesh University of Engineering and Technology.

Engineering Design is the process of coming up with products to meet customer demands. The process is not a straightforward one, but rather an iterative one. After many ups and downs (while gathering information and analyzing the design), a final product is obtained.

After suggesting a plethora of other product ideas to our honorable teachers, the "Dual sided Vegetable Cutter" was accepted. We were given the green light to do further analysis and manufacture the product. This product will help homemakers, job holders and fast-food chain workers to cut their vegetables quickly; saving time and effort.

The objective of this project is to showcase the expertise we earned from the Product Design I course. To make the product viable, customer requirement and cost was taken into account.

# SUMMARY

A vegetable cutter is a mechanical (sometimes electrical) tool that can be used to cut solid and rigid vegetables in a safe, quick and efficient manner. But our dual sided vegetable cutter uses scotch yoke mechanism to convert the torque applied by user into a reciprocating cutting motion that can simultaneously cut vegetables on both sides without use of electrical power. The scotch yoke mechanism is fail-proof and fluent while the cutting action is simple and errorless. As a result, vegetables can be diced in a much quicker, cleaner, safer and more efficient manner. As per identifying the customer requirements a prototype is meant to be built. For mass production cost analysis has been done. Our target is to manufacture a product which can be used to aid in quick and safe cooking for many households with busy individuals and also restaurant chains.

# ACKNOWLEDGEMENT

To begin with, we extend our gratitude to the Almighty for bestowing us with His blessings and guidance.

Next, we wish to convey our profound appreciation to our esteemed faculty members, Dr. Kais Bin Zaman, Dr. A.B.M Mainul Bari, and Zahin Ar Rafi. Their unwavering patience, guidance, and support throughout the report preparation and course are deeply acknowledged. We are immensely grateful for the opportunity they provided for practical work and skill enhancement. Their valuable suggestions and time devoted to guiding us were instrumental in making this project a reality within the allotted timeframe.

We also owe our thanks to the dedicated staff at the BUET machine shop. Their insights into machinery and assistance in assessing manufacturing feasibility were invaluable, providing crucial inspiration for our project.

While preparing this report, we encountered significant challenges, yet we cherished every moment of the journey. It is worth noting that this report is the result of collective effort, with each group member contributing equally to its completion.

Once again, we express our gratitude to our honorable faculty and extend our thanks to all who collaborated and supported us in this endeavor.

# TABLE OF CONTENTS

COPYRIGHT NOTICE ..... i

FORWARDING LETTER ..... ii

PREFACE ..... iii

SUMMARY ..... iv

ACKNOWLEDGEMENT ..... v

TABLE OF CONTENTS ..... vi

LIST OF TABLES ..... xii

LIST OF FIGURES ..... xvii

Chapter: 01 ..... 1

Introduction ..... 1

1.1 Product Design: ..... 1

1.2 Proposed Product Ideas: ..... 1

1.2.1 Rotary Sieving Machine: ..... 1

1.2.2 Dual Sided Vegetable Cutter (Using Scotch Yoke Mechanism) ..... 2

1.2.3 Pedal operated Hacksaw ..... 2

1.3 Selected Proposal ..... 2

1.3.1 Causes for Selection ..... 3

1.3.2 Main Features ..... 3

1.3.3 Changes we are Bringing ..... 3

Chapter-02 ..... 4

Understanding customer needs through survey ..... 4

2.1 Introduction: ..... 4

2.2 Customers and location of survey: ..... 4

2.2.1 Profession variety among reviewers: ..... 4

2.2.2 Location of Survey: ..... 5

2.3 Survey Result: ..... 5

2.4 Customer's requirement evaluation: ..... 18

2.5 Conclusion: ..... 19

Chapter-03 ..... 20

Incorporating the Voice of Customer in Product Design with Quality Function Deployment (QFD) ..... 20

3.1 Introduction: ..... 20

3.2 Customer Requirement and Engineering Requirement Relationship: ..... 20

3.3 House of Quality ..... 25

3.4 Importance Rating Table: ..... 26

3.5 Conclusion: ..... 26

Chapter-04 ..... 27

Functional Decomposition ..... 27

4.1 Introduction ..... 27

4.2 Black Box Model of Functional Decomposition ..... 28

4.3 Component Hierarchy ..... 29

4.4 Cluster Function Structure of Vegetable Cutter Machine Using Scotch-Yoke Mechanism ..... 30

4.5 Functional Analysis System Technique (FAST) Diagram: ..... 31

4.6 Conclusion ..... 32

Chapter-05 ..... 33

Qualitative Analysis of Material, Manufacturing Process, and Joining Process Selection ..... 33

5.1 Selection of Materials for Different Sections ..... 33

5.2 Manufacturing process selection for the parts ..... 35

5.3 Qualitative Analysis of Parts Joining Methods Selection ..... 36

5.4 Conclusion ..... 37

Chapter-06 ..... 38

Material, Manufacturing Process and Joining Process Selection Using Weighted Average method ..... 38

6.1 Introduction ..... 38

6.2 List of Parts for Each Sub-assembly ..... 38

6.3 Equations ..... 39

6.4 Likert Scale ..... 39

6.5 Quantitative Analysis of Material Selection of Dual Sided Vegetable Cutter40

6.5.1 Material Selection for T Frame, Rib, Reciprocating Rod, Rotating Shaft, Hinge, Cutting Chamber, Sliding Yoke and Circular Plate ..... 40

6.5.2 Material Selection for Cutting Blade ..... 42

6.5.3 Material Selection for Plunger ..... 44

6.6 Quantitative analysis for manufacturing Process Selection ..... 48

6.6.1 Manufacturing Process Selection for Base Plate, T-Frame and Hinge, Rib, Reciprocating Rod, Rotating Shaft, Sliding Yoke, Cutting Chamber, Circular Plate and Cutter Frame ..... 48

6.7 Quantitative Analysis of Permanent Joining Process Selection ..... 50

6.7.1 Joining process selection for Rotating shaft and circular plate, sliding yoke and reciprocating shaft, rib and base plate, hand paddle and rotating shaft, cutting zone and base plate ..... 50

6.8.1 Joining process selection for Reciprocating Shaft and plunger, Hinge and T frame, Base plate and adhesive feet ..... 52

6.9 Quantitative Analysis for Finishing Process Selection ..... 53

6.9.1: Selection of finishing process for Dual Sided Vegetable Cutter.... 53

Chapter - 07 ..... 56

Design Analysis ..... 56

7.1 Introduction ..... 56

7.2 Final Design &Parts of the “Dual Sided Vegetable Cutter” ..... 57

7.2.1 Parts of “Dual Sided Vegetable Cutter” ..... 57
7.2.2 Final Design of “Dual Sided Vegetable Cutter” ..... 63
7.3 Static Structural Analysis (ANSYS) ..... 64
7.3.1 Static Structural Analysis of Hand Paddle ..... 64
7.3.1.1 Total Deformation ..... 64
7.3.1.2 Equivalent (Von-Mises) Stress ..... 64
7.3.1.3 Life ..... 65
7.3.1.4 Safety Factor ..... 65
7.3.1.5 Equivalent Alternating Stress ..... 66
7.3.2 Static Structural Analysis of Rotating Shaft ..... 66
7.3.2.1 Total Deformation ..... 66
7.3.2.2 Equivalent (Von-Mises) Stress ..... 67
7.3.2.3 Life ..... 67
7.3.2.4 Safety Factor ..... 68
7.3.2.5 Equivalent Alternating Stress ..... 68
7.3.3 Static Structural Analysis of Circular Plate ..... 69
7.3.3.1 Total Deformation ..... 69
7.3.3.3 Life ..... 70
7.3.3.4 Safety Factor ..... 70
7.3.3.5 Equivalent Alternating Stress ..... 71
7.3.4 Static Structural Analysis of Sliding Yoke & Reciprocating Shaft 71
7.3.4.1 Total Deformation ..... 71
7.3.4.2 Equivalent (Von-Mises) Stress ..... 72
7.3.4.3 Life ..... 72
7.3.4.4 Safety Factor ..... 73
7.3.4.5 Equivalent Alternating Stress ..... 73

7.3.5.2 Equivalent (Von-Mises) Stress ..... 74
7.3.5.3 Life ..... 75
7.3.5.4 Safety Factor ..... 75
7.3.5.5 Equivalent Alternating Stress ..... 76
7.3.6 Static Structural Analysis of Blade ..... 76
7.3.6.1 Total Deformation ..... 76
7.3.6.2 Equivalent (Von-Mises) Stress ..... 77
7.3.6.3 Life ..... 77
7.3.6.4 Safety Factor ..... 78
7.3.6.5 Equivalent Alternating Stress ..... 78
7.3.7.2 Equivalent (Von-Mises) Stress ..... 79
7.3.7.3 Life ..... 80
7.3.7.4 Safety Factor ..... 80
7.3.7.5 Equivalent Alternating Stress ..... 81
7.4 Conclusion ..... 81
Chapter- 08 ..... 82
Cost & Sensitivity Analysis ..... 82
8.1 Demand Forecast ..... 82
8.2 Manufacturing Cost ..... 82
8.2.1 Machine cost ..... 82
8.2.2 Cost of Raw Material (Per unit of product) ..... 83
8.2.3 Labor Cost ..... 84
8.2.4 Purchasing Cost per Unit of Product ..... 86
8.2.5 Manufacturing Overhead Cost ..... 86
8.2.6 Total Manufacturing Cost (Per Year) ..... 87
8.3 Non-Manufacturing Cost ..... 87

8.3.1 Administrative Cost ..... 87
8.3.2 Sales and Marketing Expense ..... 114
8.4 Bank Loan & Interest ..... 114
8.5 Total Cost ..... 115
8.6 Break Even Analysis ..... 115
8.7 Sensitivity Analysis ..... 116
8.7.1 Sensitivity of Machine ..... 116
8.7.2 Sensitivity of Direct Material ..... 117
8.7.3 Sensitivity of Direct Labor ..... 117
8.7.4 Sensitivity of Selling & Administrative Cost ..... 118
8.8 Conclusion ..... 118
APPENDIX ..... 119
Appendix A: Questionnaire for Survey ..... 119
Appendix B: Result of tensile test of some Materials ..... 123
References ..... 124

# LIST OF TABLES

Table 2.1: Profession variety among survey respondents ..... 4

Table 2.2: Data collection table for question 1 ..... 6

Table 2.3: Data collection table for question 2 ..... 6

Table 2.4: Data collection table for question 3 ..... 7

Table 2.5: Data collection table for question 4 ..... 8

Table 2.6: Data collection table for question 5 ..... 8

Table 2.7: Data collection table for question 6 ..... 9

Table 2.8: Data collection table for question 7 ..... 10

Table 2.9: Data collection table for question 8 ..... 11

Table 2.10: Data collection table for question 9 ..... 11

Table 2.11: Data collection table for question 10 ..... 12

Table 2.12: Data collection table for question 1 ..... 13

Table 2.13: Data collection table for question 12 ..... 13

Table 2.14: Data collection table for question 13 ..... 14

Table 2.15: Data collection table for question 14 ..... 15

Table 2.16: Data collection table for question 15 ..... 16

Table 2.17: Data collection table for question 16 ..... 17

Table 2.18: Data collection table for question 17 ..... 17

Table 3.1: Relationship Explanation ..... 21

Table 3.2: Importance Rating ..... 26

Table 5.1 Qualitative material selection for the parts ..... 33

Table 5.2 Manufacturing process selection for the parts ..... 35

Table 5.3 Joint method selection table for Dual Sided Vegetable Cutter ..... 36

Table 5.4: Finishing process selection table for Dual Sided Vegetable Cutter ..... 37

Table 6.1: Likert Scale ..... 40

Table 6.2: List of numerical values of material properties ..... 40

Table 6.3: List of selection criteria with values from Likert Scale..... 40

Table 6.4: Determination of relative importance of material selection criteria for T Frame, Rib, Reciprocating Rod, Rotating Shaft, Hinge, Sliding Yoke, cutting chamber and Circular Plate using Digital Logic Method ..... 41

Table 6.5: Calculation of the performance index for material selection for Base T Frame, Rib, Reciprocating Rod, Rotating Shaft, Hinge, Cutting Chamber, Sliding Yoke and Circular Plate ..... 42

Table 6.6: List of numerical values of material property..... 42

Table 6.7: Lists of selection criteria with values from Likert scale..... 43

Table 6.8: Determination of relative importance of material selection for Cutting Blade ..... 43

Table 6.9: Calculation of the performance index for material selection for Cutting Blad ..... 44

Table 6.10: List of numerical values of material property..... 44

Table 6.11: Lists of selection criteria with values from Likert scale..... 45

Table 6.12: Determination of relative importance of material selection for Plunger45

Table 6.13: Calculation of the performance index for material selection for Plunger ..... 46

Table 6.14: List of numerical values of material properties ..... 46

Table 6.15: List of selection criteria with values from Likert Scale..... 46

Table 6.18: Lists of selection criteria with numerical values from Likert scale for Casting and Metal Cutting. ..... 48

Table 6.19: Manufacturing Process Selection for Base Plate, T-Frame and Hinge, Rib, Reciprocating Rod, Rotating Shaft, Sliding Yoke, Circular Plate and Cutter Frame using Digital Logic Method..... 49

Table 6.20: Calculation of the performance index for Manufacturing Process Selection for Base Plate, T-Frame and Hinge, Cutting Zone, Rib, Reciprocating Rod, Rotating Shaft, Sliding Yoke, Circular Plate and Cutter Frame ..... 50

Table 6.21: Lists of selection criteria with numerical values or values from the Likert scale for TIG Welding & Acetylene Gas Welding ..... 50

Table 6.22: Determination of Relative Importance of Goals Using Digital Logic Method ..... 51

Table 6.23: Calculation of performance index for joining process selection for Rotating shaft and circular plate, sliding yoke and reciprocating shaft, rib and base plate ..... 51

Table 6.24: Lists of selection criteria with numerical values or values from Likert scale for Allen screw and Riveting ..... 52

Table 6.25: Determination of Relative Importance of Goals Using Digital Logic Method ..... 52

Table 6.27: Lists of selection criteria with numerical values from Likert scale for Precision Grinding and Non-precision Grinding and Polishing ..... 53

Table 6.29: Calculation of performance index for finishing process selection ..... 55

Table 7.1: Total deformation of Hand Paddle ..... 64

Table 7.2: Equivalent (Von-Mises) Stress of Hand Paddle ..... 65

Table 7.3: Life Cycle of Hand Paddle ..... 65

Table 7.4: Safety Factor of Hand Paddle ..... 66

Table 7.5: Equivalent Alternating Stress of Hand Paddle ..... 66

Table 7.6: Total deformation of Rotating Shaft ..... 67

Table 7.7: Equivalent (Von-Mises) Stress of Rotating Shaft ..... 67

Table 7.8: Life Cycle of Rotating Shaft ..... 68

Table 7.9: Safety Factor of Rotating Shaft ..... 68

Table 7.10: Equivalent Alternating Stress of Rotating Shaft ..... 69

Table 7.11: Total deformation of Circular Plate ..... 69

Table 7.12: Equivalent (Von-Mises) Stress of Circular Plate ..... 70

Table 7.13: Life Cycle of Circular Plate ..... 70

Table 7.14: Safety Factor of Circular Plate ..... 71

Table 7.15: Equivalent Alternating Stress of Circular Plate ..... 71

Table 7.16: Total deformation of Sliding Yoke & Reciprocating Shaft ..... 72

Table 7.17: Equivalent (Von-Mises) Stress of Sliding Yoke & Reciprocating Shaft ..... 72

Table 7.18: Life Cycle of Sliding Yoke & Reciprocating Shaft ..... 73

Table 7.19: Safety Factor of Sliding Yoke & Reciprocating Shaft ..... 73

Table 7.20: Equivalent Alternating Stress of Sliding Yoke & Reciprocating Shaft. 74

Table 7.21: Total deformation of Plunger ..... 74

Table 7.22: Equivalent (Von-Mises) Stress of Plunger ..... 75

Table 7.23: Life Cycle of Plunger ..... 75

Table 7.24: Safety Factor of Plunger ..... 76

Table 7.25: Equivalent Alternating Stress of Plunger ..... 76

Table 7.26: Total deformation of Blade ..... 77

Table 7.27: Equivalent (Von-Mises) Stress of Blade ..... 77

Table 7.28: Life Cycle of Blade ..... 78

Table 7.29: Safety Factor of Blade ..... 78

Table 7.30: Equivalent Alternating Stress of Blade ..... 79

Table 7.31: Total deformation of Cutting Zone ..... 79

Table 7.32: Equivalent (Von-Mises) Stress of Cutting Zone ..... 80

Table 7.33: Life Cycle of Cutting Zone ..... 80

Table 7.34: Safety Factor of Cutting Zone ..... 81

Table 7.35: Equivalent Alternating Stress of Cutting Zone ..... 81

Table 8.1: Purchased parts and their cost (per unit of product) ..... 86

Table 8.2: Manufacturing Overhead Costs ..... 86

Table 8.3: Total Manufacturing Cost (per year) ..... 87

Table 8.4: Administrative Cost ..... 87

Table 8.5: Selling & Marketing Expenses (per month) ..... 114

Table 8.6 Total Non-Manufacturing Cost (per year) ..... 114

Table 8.7 Total Cost per Year ..... 115

# LIST OF FIGURES

Figure 2.1: Profession variety ..... 5

Figure 2.2: Reviewer opinion for question 1 ..... 6

Figure 2.3: Reviewer opinion for question 2 ..... 7

Figure 2.4: Reviewer opinion for question 3 ..... 7

Figure 2.5: Reviewer opinion for question 4 ..... 8

Figure 2.6: Reviewer opinion for question 5 ..... 9

Figure 2.7: Reviewer opinion for question 6 ..... 9

Figure 2.8: Reviewer opinion for question 7 ..... 10

Figure 2.9: Reviewer opinion for question 8 ..... 11

Figure 2.10: Reviewer opinion for question 9 ..... 12

Figure 2.11: Reviewer opinion for question 10 ..... 12

Figure 2.12: Reviewer opinion for question 11 ..... 13

Figure 2.13: Reviewer opinion for question 12 ..... 14

Figure 2.14: Reviewer opinion for question 13 ..... 15

Figure 2.15: Reviewer opinion for question 14 ..... 15

Figure 2.16: Reviewer opinion for question 15 ..... 16

Figure 2.17: Reviewer opinion for question 16 ..... 17

Figure 2.18: Reviewer opinion for question 17 ..... 18

Figure 3.1: House of Quality of Dual Sided vegetable Cutter Using Scotch yoke ..... 25

Figure 4.1: Black Box model of Dual Sided Vegetable Cutter ..... 28

Figure 4.2: Component Hierarchy ..... 29

Figure 4.3: Cluster Function of Vegetable Cutter Machine Using Scotch-Yoke Mechanism ..... 30

Fig 4.4: FAST diagram of Dual Sided Vegetable cutter ..... 31

Figure 7.1: Base Plate with T Frame and Shaft Support ..... 57

Figure 7.2.1.2: Rotating Shaft ..... 57

Figure 7.3: Hand Paddle ..... 58

Figure 7.4: Circular Plate ..... 58

Figure 7.5: Sliding Yoke & Reciprocating Rod ..... 59

Figure 7.6: Hinge ..... 59

Figure 7.7: Plunger ..... 60

Figure 7.8: Bearing ..... 60

Figure 7.9: Cutting Blade Frame ..... 61

Figure 7.10: Cutting Blade Piece ..... 61

Figure 7.11: Modular Cutting Blade Subassembly ..... 62

Figure 7.12: Cutting Zone ..... 62

Figure 7.13: Hopper ..... **Error! Bookmark not defined.**

Figure 7.14: Rubber Feet ..... **Error! Bookmark not defined.**

Figure 7.15: Bolt ..... **Error! Bookmark not defined.**

Figure 7.16: Nut ..... **Error! Bookmark not defined.**

Figure 7.17: Dual Sided Vegetable Cutter ..... 63

Figure 7.18: Total deformation of Hand Paddle ..... 64

Figure 7.19: Equivalent (Von-Mises) Stress of Hand Paddle ..... 64

Figure 7.20: Life Cycle of Hand Paddle ..... 65

Figure 7.21: Safety Factor of Hand Paddle ..... 65

Figure 7.22: Equivalent Alternating Stress of Hand Paddle ..... 66

Figure 7.23: Total deformation of Rotating Shaft ..... 66

Figure 7.24: Equivalent (Von-Mises) Stress of Rotating Shaft ..... 67

Figure 7.25: Life Cycle of Rotating Shaft ..... 67

Figure 7.26: Safety Factor of Rotating Shaft ..... 68

Figure 7.27: Equivalent Alternating Stress of Rotating Shaft ..... 68

Figure 7.28: Total deformation of Circular Plate ..... 69

Figure 7.29: Equivalent (Von-Mises) Stress of Circular Plate ..... 69

Figure 7.30: Life Cycle of Circular Plate ..... 70

Figure 7.31: Safety Factor of Circular Plate ..... 70

Figure 7.32: Equivalent Alternating Stress of Circular Plate ..... 71

Figure 7.33: Total deformation of Sliding Yoke & Reciprocating Shaft ..... 71

Figure 7.34: Equivalent (Von-Mises) Stress of Sliding Yoke & Reciprocating Shaft ..... 72

Figure 7.35: Life Cycle of Sliding Yoke & Reciprocating Shaft ..... 72

Figure 7.36: Safety Factor of Sliding Yoke & Reciprocating Shaft ..... 73

Figure 7.37: Equivalent Alternating Stress of Sliding Yoke & Reciprocating Shaft ..... 73

Figure 7.38: Total deformation of Plunger ..... 74

Figure 7.39: Equivalent (Von-Mises) Stress of Plunger ..... 74

Figure 7.40: Life Cycle of Plunger ..... 75

Figure 7.41: Safety Factor of Plunger ..... 75

Figure 7.42: Equivalent Alternating Stress of Plunger ..... 76

Figure 7.43: Total deformation of Blade ..... 76

Figure 7.44: Equivalent (Von-Mises) Stress of Blade ..... 77

Figure 7.45: Life Cycle of Blade ..... 77

Figure 7.46: Safety Factor of Blade ..... 78

Figure 7.47: Equivalent Alternating Stress of Blade ..... 78

Figure 7.48: Total deformation of Cutting Zone ..... 79

Figure 7.49: Equivalent (Von-Mises) Stress of Cutting Zone ..... 79

Figure 7.50: Life Cycle of Cutting Zone ..... 80

Figure 7.51: Safety Factor of Cutting Zone ..... 80

Figure 7.52: Equivalent Alternating Stress of Cutting Zone ..... 81

Figure 8.1: Break-even Point Analysis..... 116

# Chapter: 01
# Introduction

## 1.1 Product Design:

Product Design is a process of generating a new product or improving existing products. It involves a combination of creativity, problem-solving, and practicality to design products that are functional, aesthetically pleasing, and user-friendly. This process involves market research, identifying opportunities, concept development, testing, manufacture and production, and lastly launch and evaluation. It is a highly iterative process. Design involves a combination of creativity, critical thinking, and problem-solving skills. Product designers conceptualize and evaluate ideas in a more systematic way. The designer must consider the functional requirement and the aesthetic qualities and keep his eye on the cost of manufacturing.

## 1.2 Proposed Product Ideas:

Initially we have proposed three ideas. These are:

1. Rotary Sieving Machine
2. Dual Sided Vegetable Cutter (Using Scotch Yoke Mechanism)
3. Pedal Operated Hacksaw

### 1.2.1 Rotary Sieving Machine:

"Rotary sieving machine" is used to separate materials based on their particle size. It consists of a cylindrical drum that rotates on its axis, allowing materials to be fed into the top of the drum. The rotation of the drum will be given using pedal. As the drum rotates, finer particles pass through the screen while larger particles are retained and discharged separately.

**Features:**

- It will be pedal operated.
- It will be easy to maintain
- This machine has wide range of applications (sand, cement, wheat etc.)

**Advantages:**

- As the machine will be pedal operated, there will be no need for external power like motor.
- It will save time and efforts.
- It will be able to collect fine uniform particles.

### 1.2.2 Dual Sided Vegetable Cutter (Using Scotch Yoke Mechanism)

Vegetable cutter machine is modified by adding dual sided cutting feature which will be given using scotch yoke mechanism.

**Features:**

- Uses scotch yoke mechanism to cut vegetables on both sides.
- It is portable and compact design.
- It has dispensable cutting blade.
- It provides a standard cutting size.

**Advantages:**

- It will be easy to operate
- It will be efficient and we can cut large number of vegetables at a time
- It will be durable and will have easy maintenance

### 1.2.3 Pedal operated Hacksaw

Pedal operated hacksaw machine is a cutting tool that is human operated. This machine can be able to use in areas where electricity is not available.

**Features:**

- It has easily replaceable hacksaw blade.
- It is portable and has adjustable cutting angle
- It converts cyclic motion to intermittent cutting motion

**Advantages:**

- It is time saver compared to simple hacksaw
- It is less tiring to operate and it has higher safety

## 1.3 Selected Proposal

After proposing three different product ideas for Product Design Sessional-I, the 'Dual Sided Vegetable Cutter (Using Scotch Yoke Mechanism)' was selected as our project after analyzing its feasibility, innovative design, user friendly features.

### 1.3.1 Causes for Selection

The respectable teachers considered the following aspects before selecting our products:

1. Portability
2. Ease of use
3. Target audience
4. Dual sided cutting feature
5. Cutting two types of vegetable at the same time
6. Compact size

And thus, they came upon the conclusion that the product idea can be feasible enough for daily and commercial use if utilized properly.

### 1.3.2 Main Features

1. Scotch-yoke: A simple yet effective mechanism that converts cyclic motion given by operator into reciprocating motion. It is less complex and sturdy mechanism.
2. Swappable Blade Design: Blades can be swapped for finer/larger cutting blades. Swappable Blade Ensures longevity of device.
3. Dual Operation: Machine can be fed with 2 different Items in 2 cutting Chambers and swappable blades help in cutting efficiently in each chamber.
4. Portable and Compact mechanism: Modularity and Removable cutting chamber makes this product sturdy yet compact.

### 1.3.3 Changes we are Bringing

Normal vegetable cutters which we find in market are not safe. People often cut their hands while using them. Most importantly, normal vegetable cutter machines can cut vegetable once at a time. We have to refill frequently and while doing this, we may get a cut from sharp blades. But our "Dual Sided Vegetable Cutter Machine" is able to overcome all of these problems. It will be a double-sided cutter. The double-sided cutting mechanism will be given using scotch-yoke mechanism.

A successful product design requires systematic approach that includes user needs, aesthetics, sustainability, and iterative process. A well-designed product can provide numerous benefits for both businesses and consumers.

# Chapter-02

# Understanding customer needs through survey

## 2.1 Introduction:

The world of culinary arts and home cooking has witnessed significant advancements in recent years, with technology playing a pivotal role in revolutionizing various aspects of food preparation. Automatic kitchen appliances have become increasingly popular due to their ability to save time and effort while ensuring consistent and precise results. Among these innovative tools, Dual Sided Vegetable Cutter can gain considerable attention for its ability to simplify the often-tedious task of cutting, slicing, and dicing vegetables.

Quality is all about customer's satisfaction. So, in order to know the requirement of our possible costumers, what customers think of our product and how to make our product easy to use we tried to make a well-structured questionnaire and did the survey.

## 2.2 Customers and location of survey:

Since our product is envisioned for use of daily use and home environment, we chose the following class of people as the respondents for our survey.

### 2.2.1 Profession variety among reviewers:

Table 2.1: Profession variety among survey respondents

| Profession | Frequency |
|---|---|
| Home Maker | 5 |
| Student + Bachelor | 23 |
| Job Holder | 11 |
| Restauranteur | 6 |

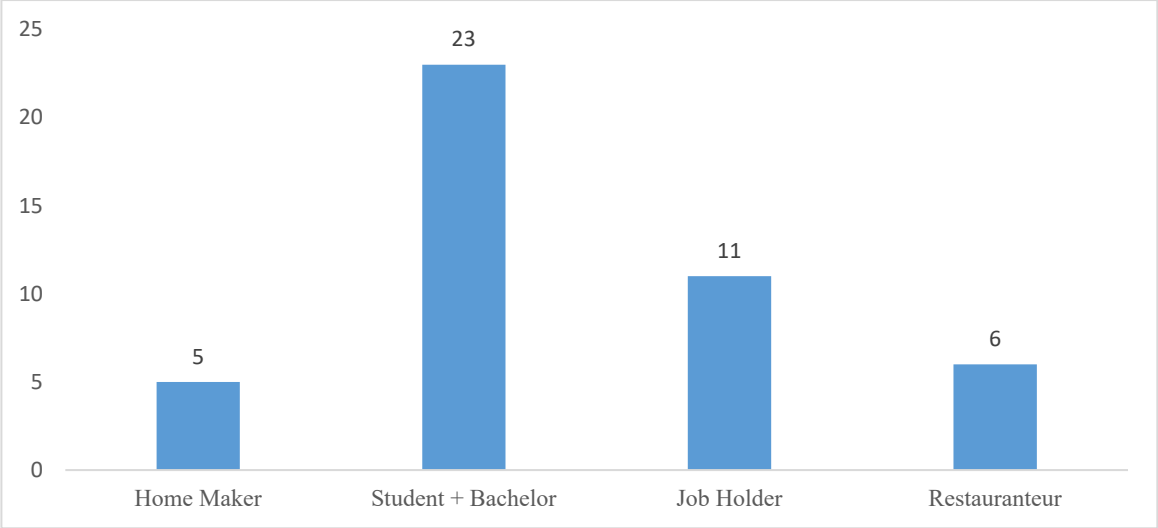


Figure 2.1: Profession variety

### 2.2.2 Location of Survey:

We chose various people from the locality of each of us and kept the survey unbiased. We also included Different restaurants that utilize vegetables in major parts of their menu. The locations from where people responded to the survey includes, but not limited to-

- Dhaka City
- Chittagong
- Sylhet
- Brahmanbaria

The following restaurants were directly approached in purpose of the survey-

1. Best Fried Chicken, Mirpur 10 Branch, Dhaka
2. Munch Station, Baily Road branch, Dhaka
3. Coffee Mania, Mirpur 10, Dhaka
4. BUET Cafeteria, Dhaka
5. Sky Dine Restaurant, Dargah Gate, Sylhet

### 2.3 Survey Result:

The survey was conducted among 45 participants. The results of the survey along with the questions are shown below with the help of Graphs, Pi-charts alongside percentages:

1. How frequently do you cook at home or at your workplace?
    - Hardly

- Occasionally
- Several times a week
- Regularly

Table 2.2: Data collection table for question 1

| Option | Response count | Response Percent |
|---|---|---|
| Hardly | 13 | 28.9% |
| Occasionally | 16 | 35.6% |
| Several times a week | 8 | 17.8% |
| Regularly | 8 | 17.8% |

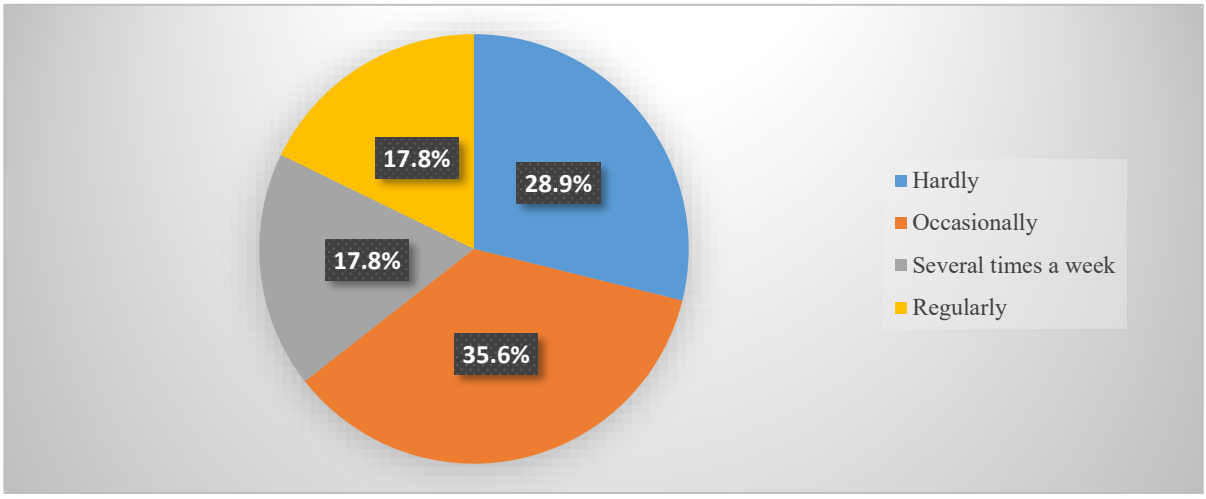


Figure 2.2: Reviewer opinion for question 1

2. How comfortable are you using traditional kitchen tools and appliances?
   - Not comfortable at all
   - Moderately comfortable
   - Very comfortable

Table 2.3: Data collection table for question 2

| Option | Response count | Response Percent |
|---|---|---|
| Not comfortable at all | 8 | 17.8% |
| Moderately comfortable | 30 | 66.7% |
| Very comfortable | 7 | 15.6% |

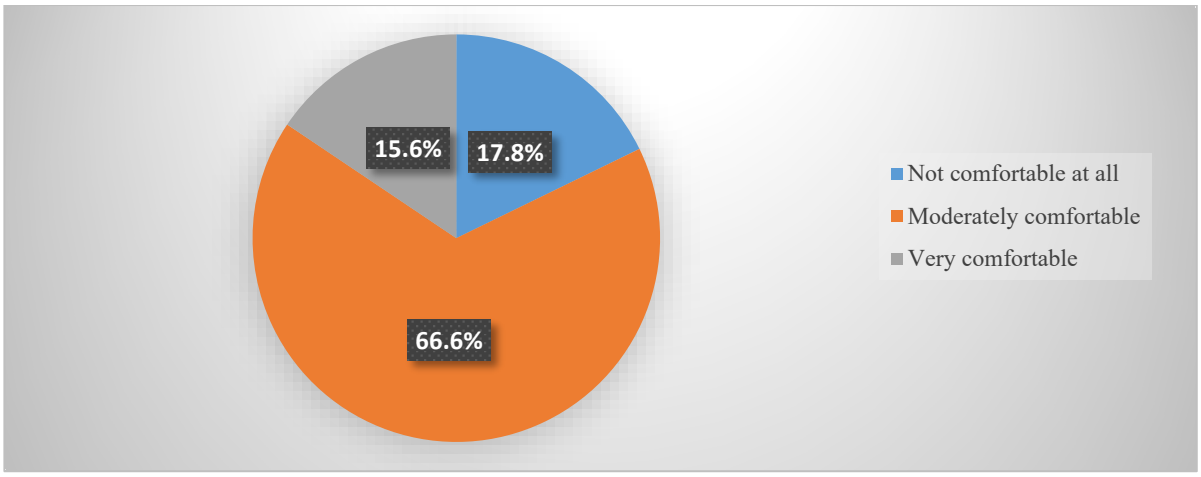


Figure 2.3: Reviewer opinion for question 2

3. How much mess does your traditional cutter usually make?
    - Few
    - Moderate
    - High

Table 2.4: Data collection table for question 3

| Option | Response count | Response Percent |
|---|---|---|
| Few | 9 | 20% |
| Moderate | 25 | 55.6% |
| High | 11 | 24.4% |

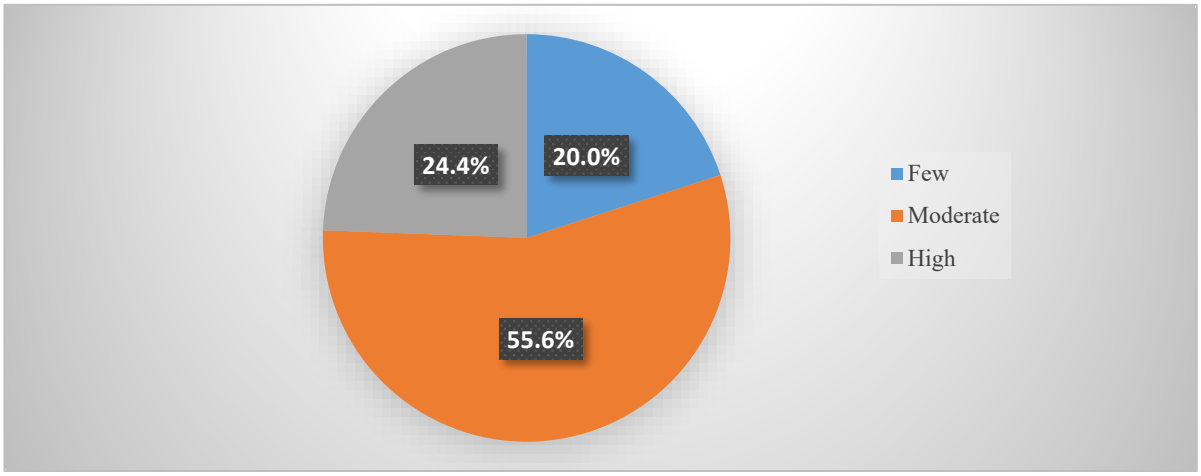


Figure 2.4: Reviewer opinion for question 3

4. On a scale of 1 to 5, how satisfied are you with your current vegetable cutting method in terms of efficiency and ease of use?
    - 1 (Not satisfied at all)
    - 2 (Slightly Dissatisfied)
    - 3 (Indifferent)
    - 4 (Moderately Satisfied)
    - 5 (Very satisfied)

Table 2.5: Data collection table for question 4

| Option | Response count | Response Percent |
|---|---|---|
| 1 (Not satisfied at all) | 2 | 4.5% |
| 2(Slightly Dissatisfied) | 15 | 34.1% |
| 3 (Indifferent) | 19 | 43.2% |
| 4 (Moderately Satisfied) | 5 | 11.4% |
| 5 (Very satisfied) | 5 | 6.8% |

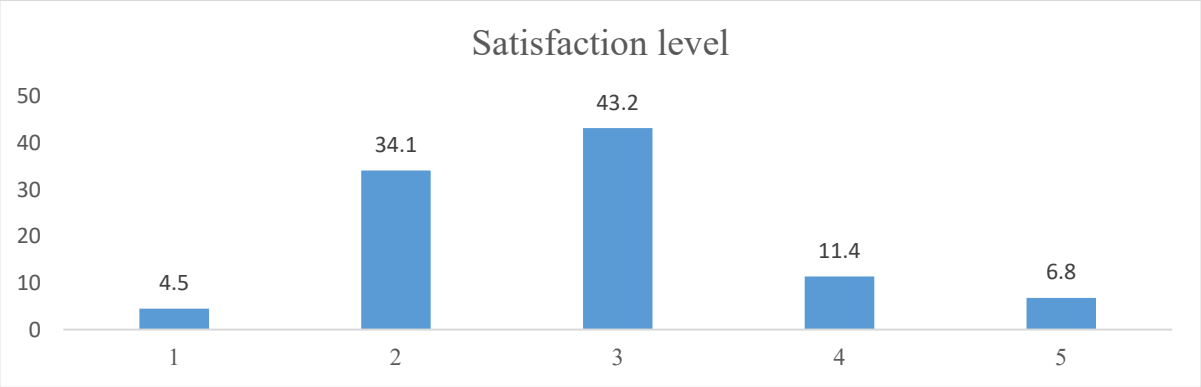


Figure 2.5: Reviewer opinion for question 4

5. Do you use any Modern Kitchen Tool?
    - Yes
    - No

Table 2.6: Data collection table for question 5

| Option | Response count | Response Percent |
|---|---|---|
| Yes | 20 | 44.4% |
| No | 25 | 55.6% |

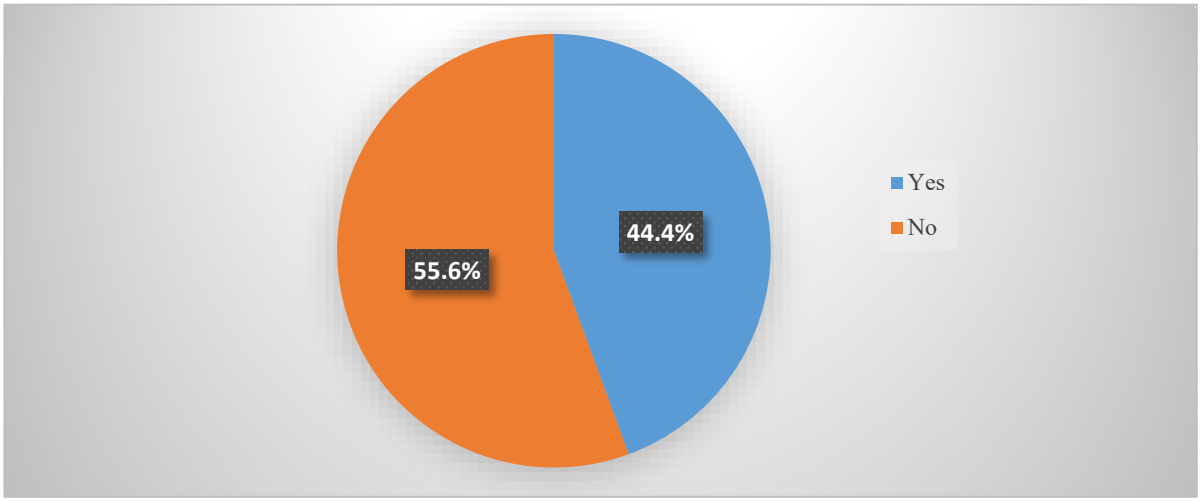


Figure 2.6: Reviewer opinion for question 5

6. Do you use any Vegetable Cutter?
   - Yes
   - No

Table 2.7: Data collection table for question 6

| Option | Response count | Response Percent |
|---|---|---|
| Yes | 24 | 53.3% |
| No | 21 | 46.7% |

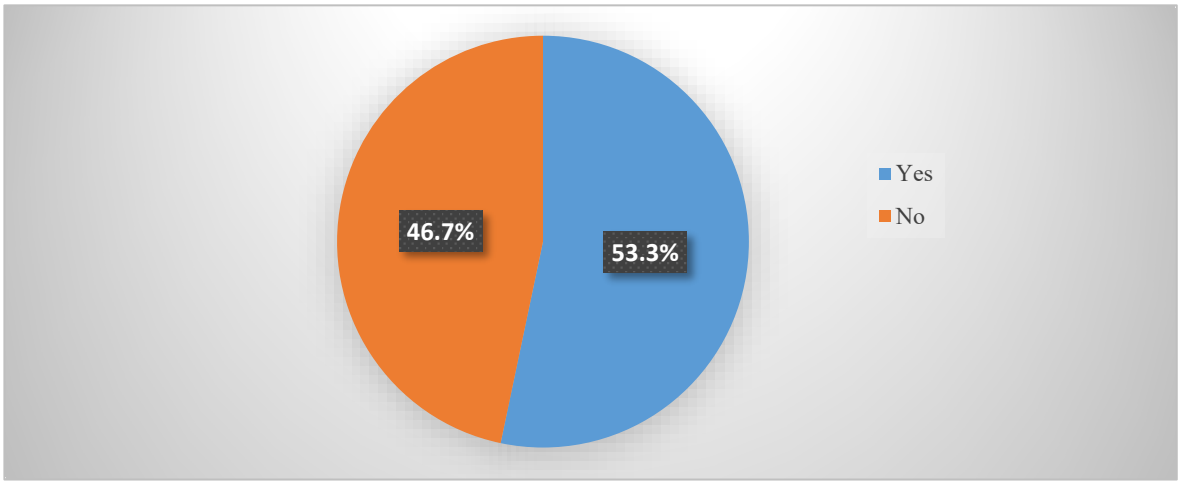


Figure 2.7: Reviewer opinion for question 6

7. If yes, what features or qualities are most important to you when choosing a vegetable cutter? (Multiple choice)
    - Cutting performance
    - Durability
    - Ease of use
    - Safety feature
    - Portability
    - Ease of cleaning

Table 2.8: Data collection table for question 7

| Option | Response count | Response Percent |
|---|---|---|
| Cutting performance | 18 | 75% |
| Durability | 9 | 37.5% |
| Ease of use | 17 | 70.8% |
| Safety feature | 13 | 54.2% |
| Portability | 10 | 41.7% |
| Ease of cleaning | 11 | 45.8% |

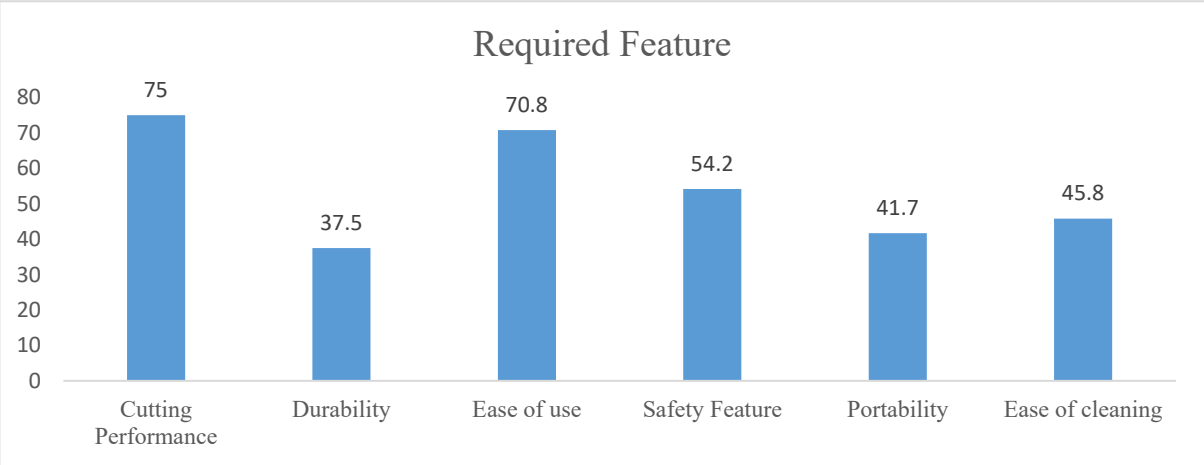


Figure 2.8: Reviewer opinion for question 7

8. How often do you use a vegetable cutter in your cooking?
    - Rarely
    - Occasionally
    - Several times a week
    - Almost daily

Table 2.9: Data collection table for question 8

| Option | Response count | Response Percent |
|---|---|---|
| Rarely | 5 | 20.8% |
| Occasionally | 11 | 45.8% |
| Several times a week | 4 | 16.7% |
| Almost daily | 4 | 16.7% |

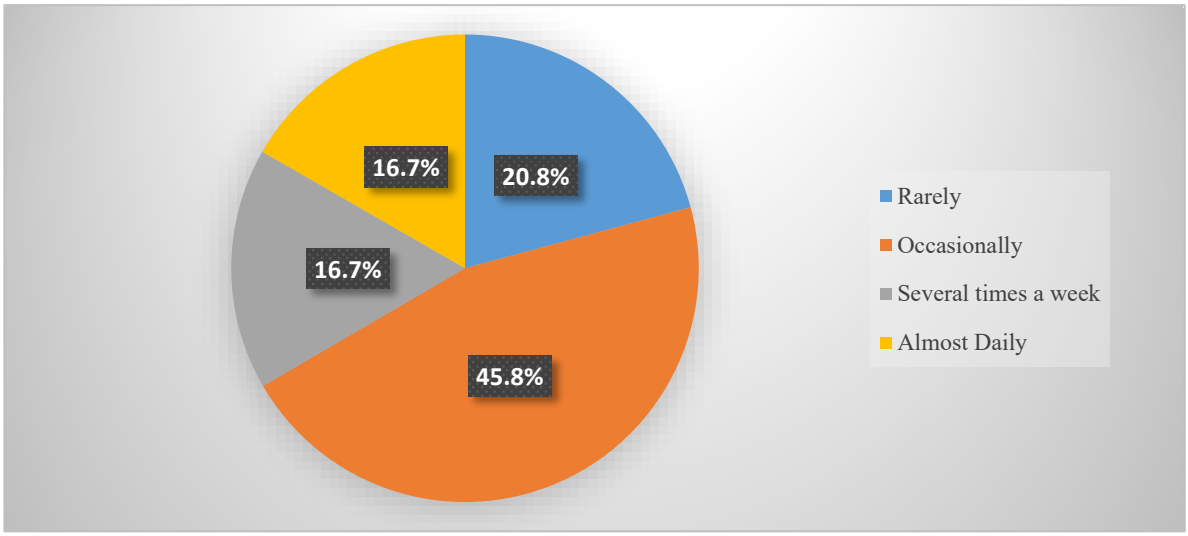


Figure 2.9: Reviewer opinion for question 8

9. If no, why don't you prefer using a vegetable cutter? (Multiple choice)
    - Not durable
    - Not budget friendly
    - Not easy to use
    - Not versatile enough
    - Not compact

Table 2.10: Data collection table for question 9

| Option | Response count | Response Percent |
|---|---|---|
| Not durable | 7 | 33.6% |
| Not budget friendly | 5 | 23.8% |
| Not easy to use | 4 | 19% |
| Not versatile enough | 9 | 42.9% |
| Not compact | 4 | 19% |

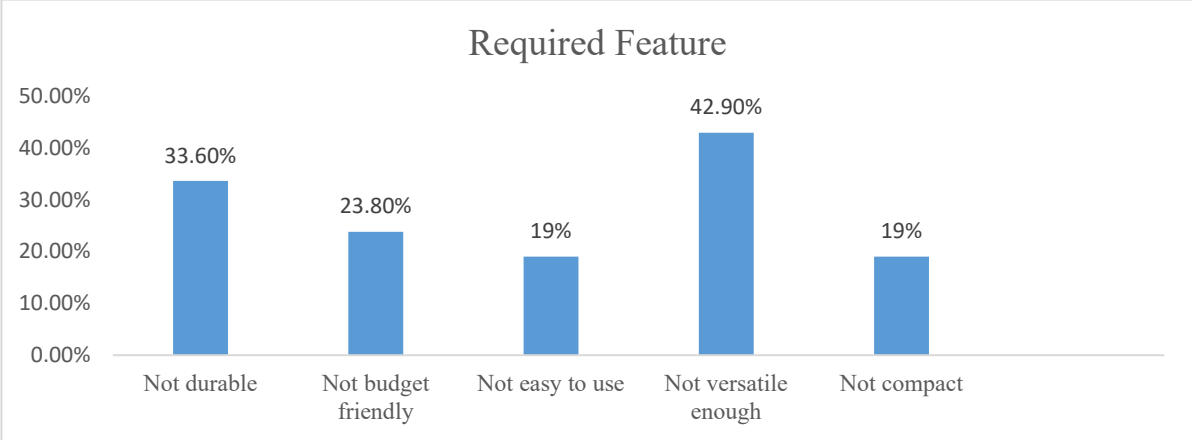


Figure 2.10: Reviewer opinion for question 9

10. Have you ever heard of/used a dual sided vegetable cutter before?
    - Yes
    - No

Table 2.11: Data collection table for question 10

| Option | Response count | Response Percent |
|---|---|---|
| Yes | 38 | 15.6% |
| No | 7 | 84.4% |

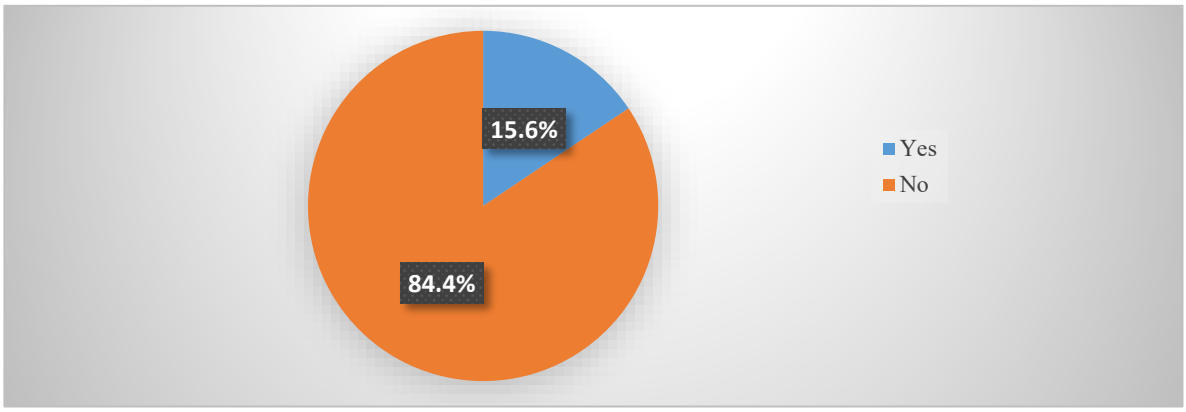


Figure 2.11: Reviewer opinion for question 10

11. How likely are you to consider purchasing a new vegetable cutter? For reference, you can check our product for which a conceptual video for our product is given.
    - 1 (Very Unlikely)
    - 2 (Unlikely)
    - 3 (Needs more Demonstration)
    - 4 (Likely)

- 5 (Very Likely)

Table 2.12: Data collection table for question 1

| Option | Response count | Response Percent |
|---|---|---|
| 1 (Very Unlikely) | 3 | 6.7% |
| 2 (Unlikely | 3 | 6.7% |
| 3 (Needs more Demonstration) | 13 | 28.9% |
| 4 (Likely) | 14 | 31.1% |
| 5 (Very Likely) | 12 | 26.6% |

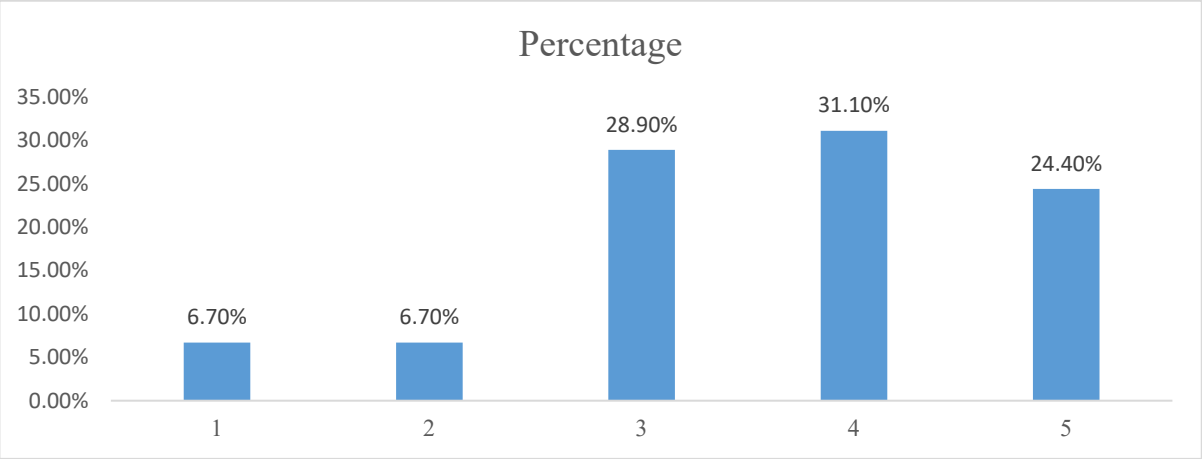


Figure 2.12: Reviewer opinion for question 11

12. Do you find variable cutter size conducive to your kitchen work? e.g., detachable cuter Blades.
    - Yes
    - No

Table 2.13: Data collection table for question 12

| Option | Response count | Response Percent |
|---|---|---|
| Yes | 33 | 75.6% |
| No | 10 | 14.6% |

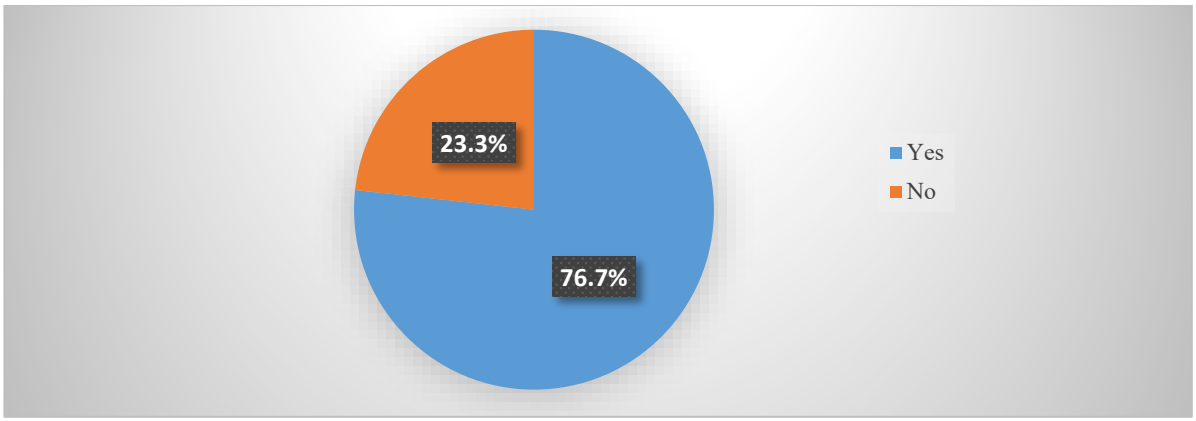


Figure 2.13: Reviewer opinion for question 12

We prepared a separate survey segment for restauranteurs from various fast-food chain and restaurants so that we could take insight into which types of food production can be facilitated by our product. The three Questions are as follows:

13. Suppose, a customer has ordered a dish/menu that requires finely chopped vegetables/ingredients. What is the average waiting time for that customer?
    - 10-15 min
    - 15-20 min
    - 20-25 min
    - 25 and above

Table 2.14: Data collection table for question 13

| Option | Response count | Response Percent |
|---|---|---|
| 10-15 min | 4 | 75.6% |
| 15-20 min | 2 | 14.6% |
| 20-25 min | 0 | 0% |
| 25 and above | 0 | 0% |

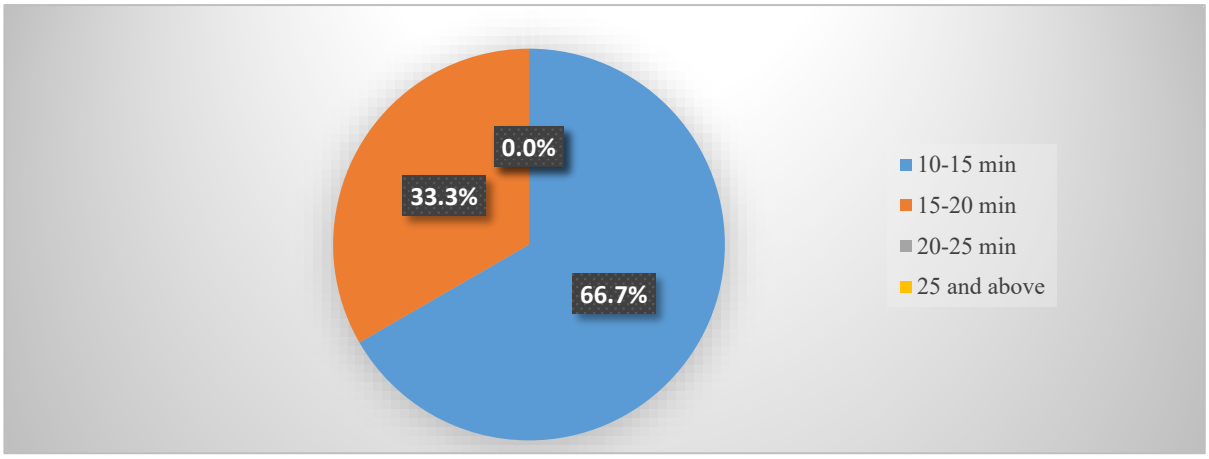


Figure 2.14: Reviewer opinion for question 13

14. How much do you think a variable sized vegetable cutter would be able to reduce the waiting time / be beneficial to the customers?
    - None at all
    - Moderately
    - Highly

Table 2.15: Data collection table for question 14

| Option | Response count | Response Percent |
|---|---|---|
| None at all | 1 | 16.7% |
| Moderately | 3 | 50% |
| Highly | 2 | 33.3% |

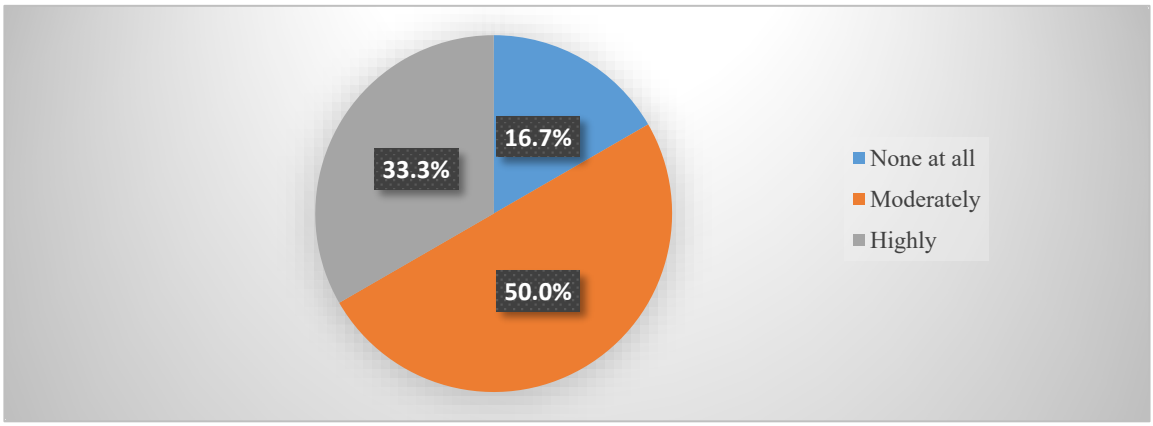


Figure 2.15: Reviewer opinion for question 14

15. What type of food items do you think the vegetable cutter should be capable of cutting? (Multiple Choice)
    - Fried food (ex: Wedges, French Fries etc.)
    - Salad (ex: Coleslaw)
    - Fruits for desert/salad
    - Bacon/Meat products
    - Herbs
    - Dairy products (ex: Cheese)
    - Garnishes (ex: Lettuce, Radish, Cucumber, Carrot etc.)

Table 2.16: Data collection table for question 15

| Option | Response count | Response Percent |
|---|---|---|
| Fried food (ex: Wedges, French Fries etc.) | 4 | 66.7% |
| Salad (ex: Coleslaw) | 5 | 83.3% |
| Fruits for desert/salad | 6 | 100% |
| Bacon/Meat products | 0 | 0% |
| Herbs | 3 | 50% |
| Dairy products (ex: Cheese) | 1 | 16.7% |
| Garnishes (ex: Lettuce, Radish, Cucumber, Carrot etc.) | 3 | 50% |

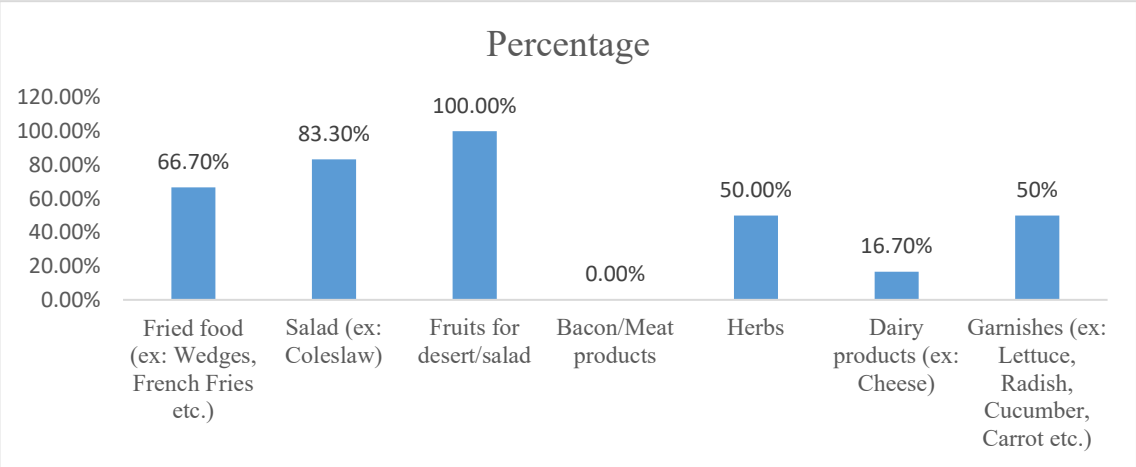


Figure 2.16: Reviewer opinion for question 15

16. How would you like to receive the aforementioned product?

- Home Delivery
- On Shop

Table 2.17: Data collection table for question 16

| Option | Response count | Response Percent |
|---|---|---|
| Home delivery | 31 | 24.4% |
| On Shop | 10 | 75.6% |

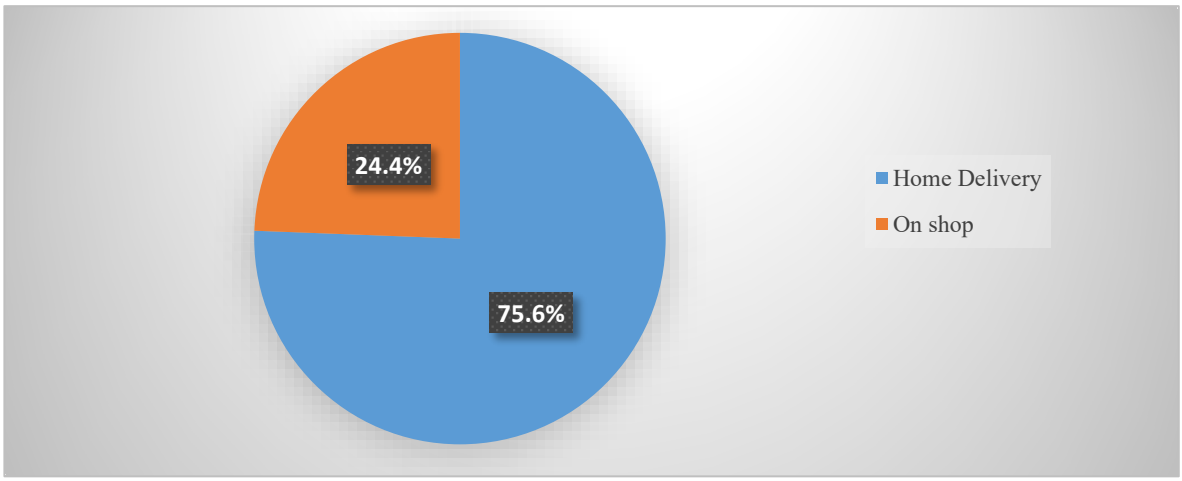


Figure 2.17: Reviewer opinion for question 16

17. How much would you be willing to pay for a high quality dual sided vegetable cutter?

- 4000-6000
- 6000-8000
- 8000-10000
- 10000tk and above

Table 2.18: Data collection table for question 17

| Option | Response count | Response Percent |
|---|---|---|
| 4000-6000 | 31 | 75.6% |
| 6000-8000 | 6 | 14.6% |
| 8000-10000 | 0 | 0% |
| 10000tk and more | 4 | 9.8% |

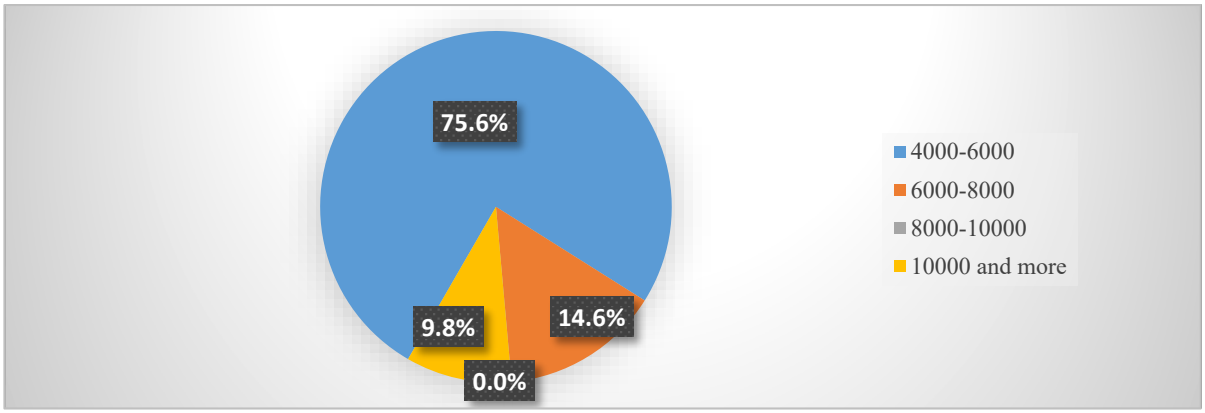


Figure 2.18: Reviewer opinion for question 17

**2.4 Customer's requirement evaluation:**

We have found 45 responses on these specific features of our targeted product. Conducting our survey, we have found that our customers mostly value a vegetable cutter machine that has better cutting performance, durability, ease of use, safety features, portability and ease of cleaning. So, we have given these characteristics relatively higher importance along with considering other features as well.

Table 2.19: Customer requirement evaluation

| Customer requirement | Number of Response (person) | Percentage (%) | On a Scale of 10 |
|---|---|---|---|
| Cutting performance | 35 | 77.8 | 8 |
| Durability | 17 | 37.8 | 4 |
| Ease of use | 32 | 71.1 | 7 |
| Safety features | 25 | 55.6 | 6 |
| Portability | 18 | 40 | 4 |
| Ease of cleaning | 23 | 51.1 | 5 |

This survey is a list of carefully constructed questions aimed at some specific group of people for extracting specific data. Some of them were conducted face-to-face and some of them via the internet. A survey plays an important role in the initial stages of the product development process. After conducting the survey, we can now move on to the next stage of the product development process.

## 2.5 Conclusion:

Surveying provides us with means of understanding customer needs, preferences and expectations through a set of pre-emptively set questions. The info gathered served as a foundation for our product development, ensuring that the final product aligns with the expectations and requirements of the intended user base. By collecting and analyzing the data obtained from the survey, we were able to discern their price affordability and expected features.

# Chapter-03

# Incorporating the Voice of Customer in Product Design with Quality Function Deployment (QFD)

## 3.1 Introduction:

The "voice of the customer" (VOC) is a means of acquiring customer feedback and info on customer needs. This is necessitated to provide the customer with the best service/product. We know that quality is dependent on the customer. So, the "voice of the customer" serves as a guiding light to enable us to be resourceful and strive for constant quality improvement. Some of the conventional methods of acquiring VOC or customer opinion are direct interviews or discussions, direct observation, Surveys, Field reports, etc.

Quality Function Deployment (QFD) is a structured and systematic approach used in product and service development to ensure customer needs and expectations are fully understood and integrated into the design and production process. It originated in Japan in the 1960s and has since become a widely adopted methodology in various industries worldwide. The main goal of QFD is to translate customer requirements into specific technical requirements that can be implemented by the development team.

"House of Quality" or Product Planning Matrix is a key component of QFD. The House of Quality matrix typically consists of two main parts: Customer Requirements and Engineering Characteristics The matrix visually represents the relationships between customer requirements and engineering characteristics.

We have already gathered the required info about customer demands via surveys and interviews. Next, we need to analyze the requirements, weigh the relative importance, and assign a weighting factor.

## 3.2 Customer Requirement and Engineering Requirement Relationship:

The next step in the QFD technique entails evaluating the importance of each customer requirement on a scale of 1 to 10, following the completion of the customer survey to ascertain their wants. Each parameter will be given a weighting factor depending on the ratings given in this procedure. Higher scores indicate a greater level of relevance, which is represented by the calculated gross score.

Table 3.1: Relationship Explanation

| Customer Requirements | Engineering Requirement | Relationship | Explanation |
|---|---|---|---|
| Durability | Material | High | Material with high compressive and shear strength enhances durability |
| | Handle Design | Low | Relevant factor as shear and compressive stress is continuously applied during operation |
| | Blade Design | Moderate | Blade Design and meshing of blades determine its life cycle |
| | Reciprocating shaft | High | The part that is constantly under compressive load and |
| | Maintenance cost | Low | A product of hard wearing requires minimum maintenance |
| | Manufacturing cost | Moderate | Durable material increases cost of manufacturing |
| | Life cycle | High | The more durable, the more life expectancy |
| Weight | Material | High | Selecting light material ensures less weight |
| | Manufacturing cost | High | Unnecessary weight adds to assembly/manufacturing cost |
| Availability of spare parts | Material | Moderate | Effective material management and its cost is nonetheless a key factor to maintain spare parts' availability |
| | Maintenance cost | Moderate | stocking spare parts makes it convenient maintainability |
| | Manufacturing cost | High | Ensuring spare parts increments manufacturing cost |

| | | | |
|---|---|---|---|
| | Life cycle | High | Availability of products and spare parts ensures consumers to use the product |
| | Efficiency | Low | High efficiency of mechanism ensures the need of spare parts |
| Cutting Performance | Material | High | Material determines how smoothly the blade will rotate without going through any fracture |
| | Blade design | High | Blade design is crucial for cutting performance. Because, a well-designed blade will cut the vegetables effectively |
| | Maintenance cost | Moderate | For getting good performance, a good maintenance is required |
| | Efficiency | High | The efficiency of the major parts of the product like blade, reciprocating shaft and handle has a significant influence on cutting performance |
| Reliability | Material | High | High-quality and durable materials withstand wear, stress, and environmental conditions |
| | Handle design | Low | ergonomic and well-engineered handle design can enhance user comfort and control |
| | Blade design | Moderate | well-designed blade maintains its sharpness, strength, and structural integrity over time |
| | Life cycle | High | Regular maintenance, updates, and proper disposal processes can |

| | | | |
|---|---|---|---|
| | | | extend the product's life and maintain its reliability |
| | Efficiency | Moderate | Efficient product often retains performance in the long run |
| Ease of use | Handle design | Moderate | A well-designed handle can impact the overall user experience and comfort. |
| | Detachable blade | High | A detachable blade is easy to clean and safe to use |
| Portability | Material | Low | Different materials possess distinct physical properties that can affect weight, strength, etc. |
| | Life cycle | Moderate | Portability is an important consideration that should be integrated into all phases of the product life cycle |
| Safety features | Blade Design | High | The precision and quality of blade manufacturing are crucial as small defects can lead to significant safety concerns during operation |
| | Detachable blade | Low | A detachable blade is safe for cleaning purposes |
| Aesthetics | Handle design | High | Properly designed handle complements the machine's overall look and makes the device more inviting and user-friendly. |
| | Blade design | Low | Blades are functionality focused and have limited design elements |
| | Manufacturing cost | Moderate | Essential parameters for aesthetics such as finishing, surface |

| | | | |
|---|---|---|---|
| | | | treatment, quality control rely heavily upon manufacturing cost allocated |
| Easy cleaning | Blade design | High | Uniform design of blade mesh and proper joining ensures easy cleaning of blade |
| | Detachable blade | High | Detachable blade templates ensure easy access to cutting chamber |
| | Manufacturing cost | Low | Making the product cleanable is a design problem, not a manufacturing one |

### 3.3 House of Quality

| Relationship | symbol | Rating |
|---|---|---|
| High | ◉ | 5 |
| Medium | ■ | 3 |
| Low | ○ | 1 |

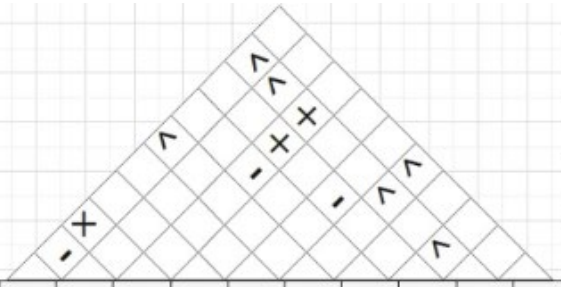

| | |
|---|---|
| Strong Relationship | + |
| Moderate Relationship | ^ |
| Weak relationship | - |
| No Relationship | BLANK |

| Funtional requirements / Customer's requirement | Material | Handle design | Blade design | Detachable blade | Recipocating shaft | Maintenance cost | Manufacturing cost | Life cycle | Efficiency | Importance(10) | Competitors(10) | Our product(10) | Score(10) | Percent score(100) |
|---|---|---|---|---|---|---|---|---|---|---|---|---|---|---|
| Durability | ◉ | ○ | ■ | | ◉ | ○ | ■ | ◉ | | 10 | 9 | 10 | 10 | 11 |
| Weight | ◉ | | | | | | ◉ | | | 9 | 8 | 7 | 9 | 10 |
| Availability | ■ | | | | | ■ | ◉ | ◉ | ○ | 10 | 10 | 9 | 10 | 11 |
| Cutting performance | ◉ | | ◉ | | ■ | | | | ◉ | 10 | 8 | 10 | 10 | 11 |
| Reliability | ◉ | ○ | ■ | | | | | ◉ | ■ | 8.5 | 7 | 8 | 8.5 | 9 |
| Ease of use | | ■ | | ◉ | | | | | | 9 | 8 | 9 | 9 | 10 |
| Portability | ○ | | | | | | ■ | | | 8 | 7 | 7 | 8 | 8 |
| Safety features | | | ◉ | ○ | | | | | | 10 | 7.5 | 10 | 10 | 11 |
| Aesthetics | | ◉ | ○ | | | | ■ | | | 8.5 | 8 | 8.5 | 8.5 | 9 |
| Easy cleaning | | | ◉ | ◉ | | | ○ | | | 9 | 7 | 9 | 9 | 10 |
| Score(1266) | 246 | 95 | 229 | 111 | 88 | 44 | 199 | 155 | 99 | | | | SUM =92 | |

Figure 3.1: House of Quality of Dual Sided vegetable Cutter Using Scotch yoke

### 3.4 Importance Rating Table:

From the house of quality, we arranged the technical requirements by their importance.

Table 3.2: Importance Rating

| Observation Number | Engineering Requirement | Importance Rating (%) |
|---|---|---|
| 1 | Material | 20 |
| 2 | Handle Design | 7 |
| 3 | Blade Design | 18 |
| 4 | Detachable Blade | 9 |
| 5 | Reciprocating Shaft | 7 |
| 6 | Maintenance Cost | 3 |
| 7 | Manufacturing Cost | 16 |
| 8 | Life Cycle | 12 |
| 9 | Efficiency | 8 |

QFD emphasizes understanding and prioritizing customer needs. It enables organizations to produce customer-centric products, make better decisions, enhance product quality, reduce costs, and gain a competitive advantage.

### 3.5 Conclusion:

QFD has played a pivotal role in our product design process, guiding us to deliver a product that will not only meets technical requirements but also resonate with our customers on a deeper level. The iterative nature of QFD is particularly valuable, allowing us to adapt to changing market dynamics and customer preferences. Quality Function Deployment requires a significant investment of time and effort, but its role in shaping successful products cannot be overstated. Despite its time-consuming nature, the benefits of QFD far outweigh the challenges. The time invested in QFD is an investment in the success of the final product. The time spent on QFD ultimately leads to time savings during the later stages of product development. We are committed to integrating QFD into our design culture to ensure continued excellence in our future endeavors.

# Chapter-04

# Functional Decomposition

## 4.1 Introduction

Functional decomposition is the technique of breaking down a complex, larger system into manageable sub-tasks or functions. This process helps to simplify the problem, improve understanding, and facilitate the design and implementation of solutions. Composing a problem into its constituent parts makes it easier to analyze, develop, and maintain the overall system or project. During functional decomposition, it becomes easier to identify and prioritize the specific requirements associated with each function, helping to ensure that the system meets the intended goals. Moreover, functional decomposition is a powerful technique that promotes a systematic and organized approach to problem-solving, making it an essential tool for tackling complex tasks in various domains.

There are four basic steps that are followed in applying the technique for proper decomposition. These are-

**Step 1: Find the Overall Function**

To begin with, the most general function that needs to be accomplished is identified. All design problems have one or two "most important" functions that must be reduced to a simple clause and put in a black box. A black box diagram is usually the output of this step where materials, energy, information inputs, and outputs are specified.

**Step 2: Find the closest sub-functions**

This step focuses on identifying the sub-functions that must take place immediately close to the most general function.

**Step 3: Order the Sub-functions**

The objective is to add order to the functions generated in the previous step. The immediate sub-functions are found and they are drawn on the functional decomposition diagram in a specified order.

**Step 4: Refine Sub-functions**

The goal is to decompose the sub-function structure as finely as possible. This indicates checking each sub-function to see if it can be further divided into more sub-functions.

### 4.2 Black Box Model of Functional Decomposition

A black box model is useful to carry out the functional decomposition. A system that can only be observed or interacted with through its inputs and outputs, without any knowledge or comprehension of what takes place inside the box, is referred to as a "black box" in common parlance. By balancing utility and usability, black boxes play a crucial role in product design. They also make it possible to construct complicated systems in a more structured and manageable way.

Black box diagram for Dual Sided Vegetable Cutter is given below:

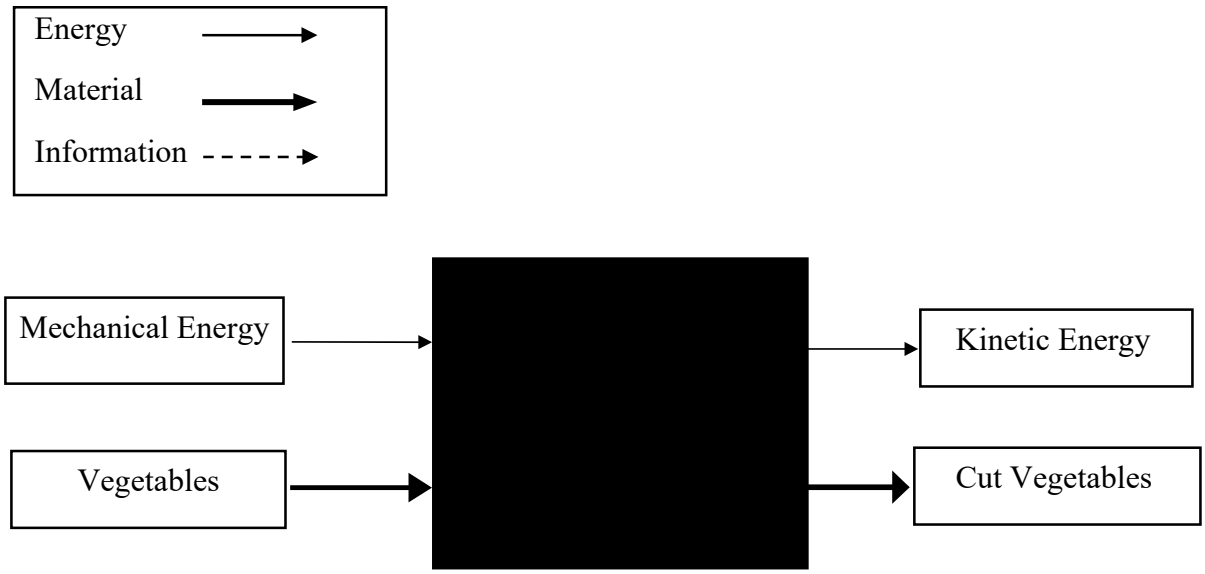


Figure 4.1: Black Box model of Dual Sided Vegetable Cutter

There are generally three types of input and corresponding output in a black box. They are:

i. Energy input and output

ii. Material input and output

Information input and output in our product's black box, there are two types of flow. They are discussed below:

**I. Energy Flow:** Our product will be operated by mechanical energy. This mechanical energy will be converted into kinetic energy by scotch yoke mechanism to slice the vegetables.

**II. Material Flow:** Our product will receive raw vegetables as primary input materials. The actual transformation of the raw vegetables into the appropriate cut shapes is accomplished by the cutting blades.

**III. Information Flow:** Our product has no information flow.

### 4.3 Component Hierarchy

Functional decomposition is a problem-solving technique that involves breaking down a complex system or task into smaller, more manageable sub-tasks or components. Each sub-task is then analyzed and addressed independently, leading to a better understanding of the overall system. It offers benefits such as improved understanding, modularity, efficiency, simplified problem-solving, and design optimization, making it a valuable tool in various fields like product design, software development, engineering, and management.

Component hierarchy of our product "Dual Sided Vegetable Cutter" is shown below:

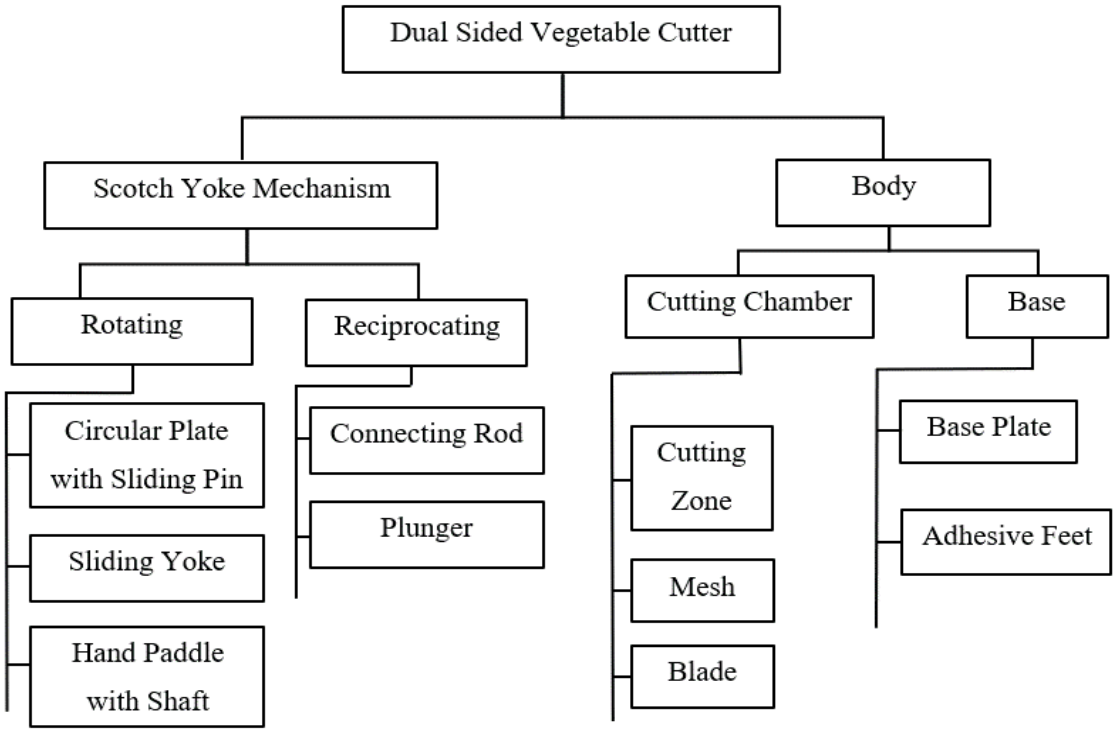


Figure 4.2: Component Hierarchy

**4.4 Cluster Function Structure of Vegetable Cutter Machine Using Scotch-Yoke Mechanism**

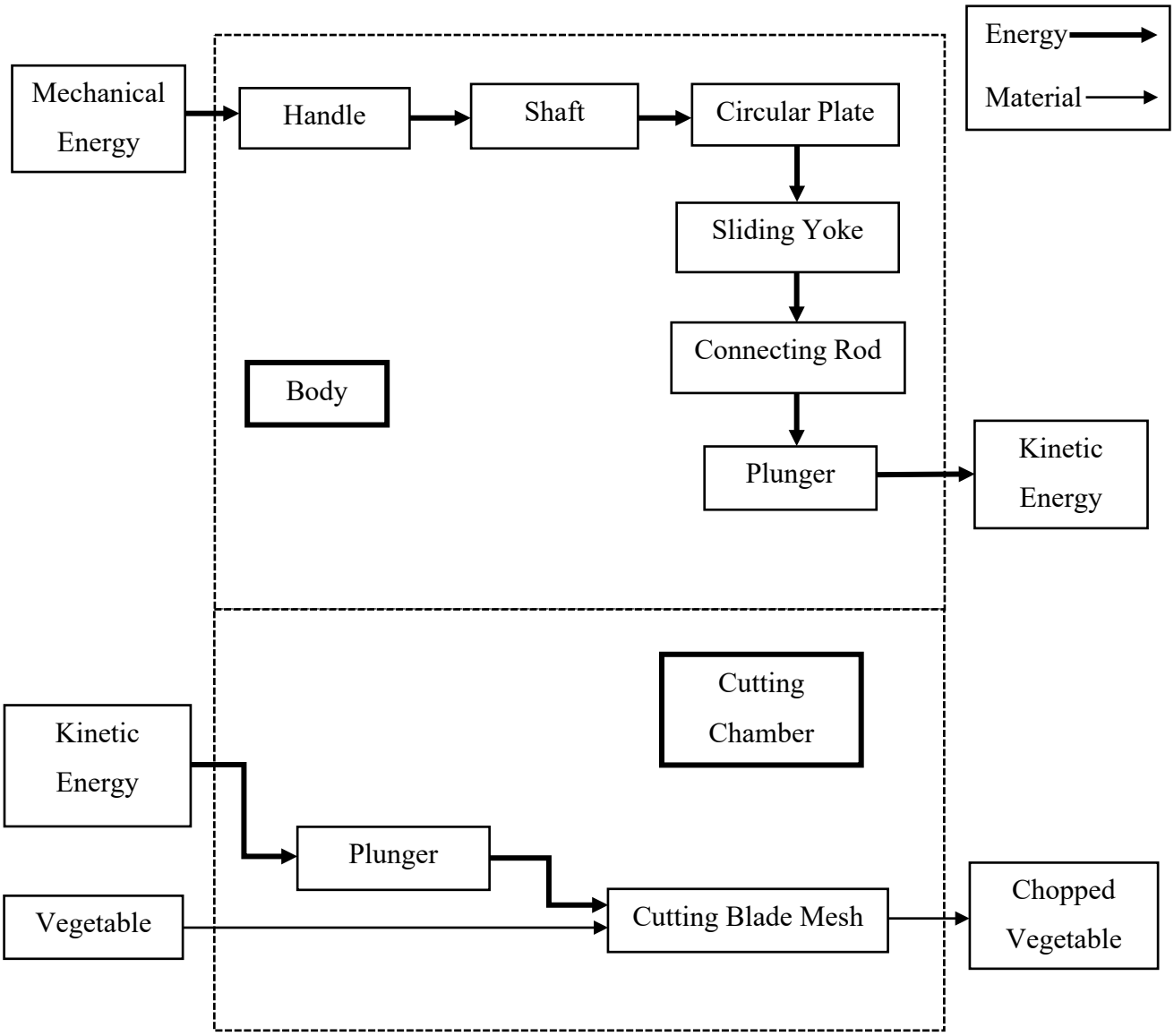


Figure 4.3: Cluster Function of Vegetable Cutter Machine Using Scotch-Yoke Mechanism

### 4.5 Functional Analysis System Technique (FAST) Diagram:

Functional Analysis System Technique (FAST) diagram is a graphical tool used in project management to visually represent the functions and logical relationships of a system. It shows the relations based on the questions “How”, “Why” and “When”.

The FAST diagram of our Dual Sided Vegetable Cutter is as follows:

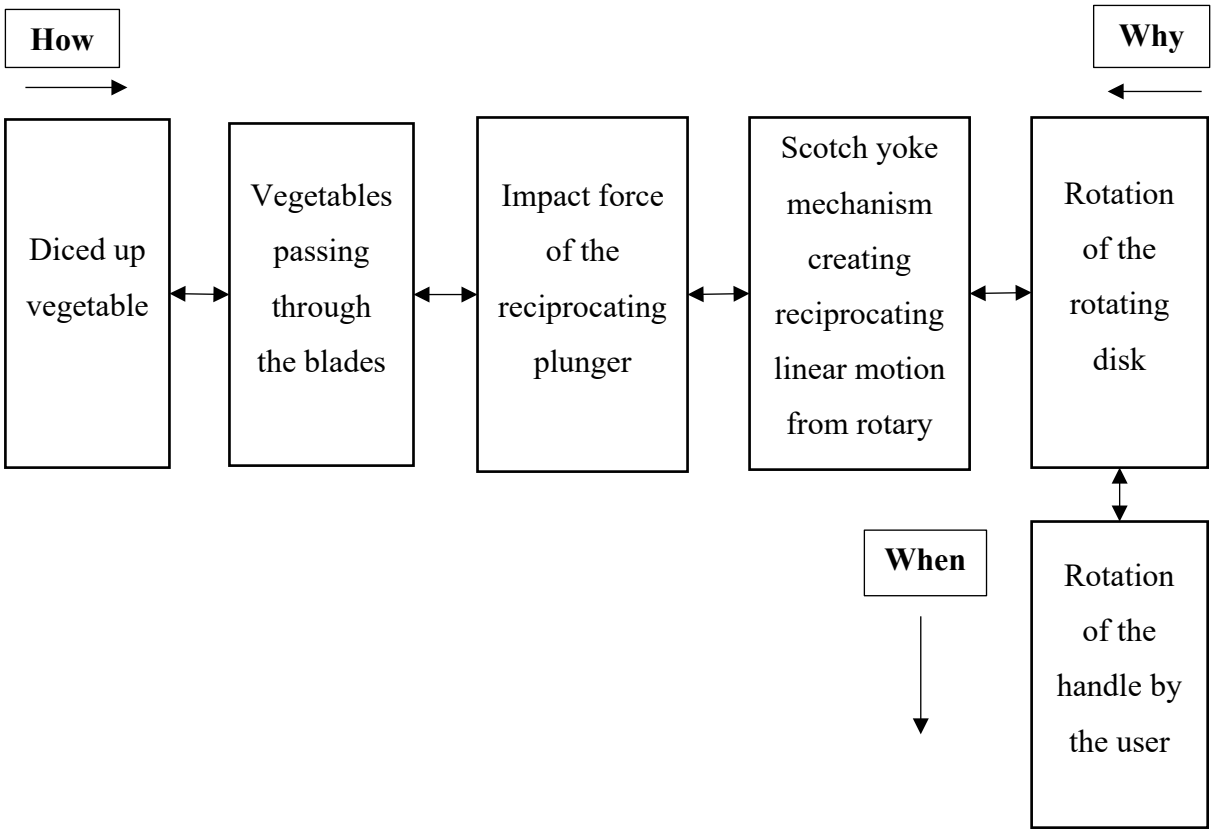


Fig 4.4: FAST diagram of Dual Sided Vegetable cutter

### 4.6 Conclusion

Functional decomposition is an inalienable part of solving a problem that is comparatively larger and more complex. We can conclude that these three different methods are very useful ways for generating a successful functional decomposition. They have also their unique characteristics. As the name says “BLACK-BOX”, what happens inside the black box is not visible. But it gives the idea about the whole material, energy, and information input and output of the product. The component hierarchy for different mechanisms shows the hierarchy of the levels of increasingly detailed processes within the system and the cluster function structure shows the flow of material, energy, and information of the whole product with the help of a detail drawing. And the organization of the functions into a Fast diagram enables participants to identify of all the required functions. The FAST diagram can be used to verify if, and illustrate how, a proposed solution achieves the needs of the project, and to identify unnecessary, duplicated, or missing functions.

# Chapter-05

# Qualitative Analysis of Material, Manufacturing Process, and Joining Process Selection

Materials selection is a crucial aspect of the Product Design process, as it involves devising innovative solutions for various challenges. The design of engineering components is limited by the materials at hand, but the introduction of new materials can open up possibilities for fresh designs. With the Combined Tiller and Sprayer nearing its final stages of conceptual development and design, it becomes imperative to carefully designate specific materials and manufacturing processes for each part of the product.

The selection of materials should ensure that each part is not only capable of fulfilling its intended functions but also possesses sufficient mechanical strength. To achieve this, a qualitative analysis is carried out, considering the material properties, manufacturing processes, and joining methods available among the potential alternatives. By leveraging fundamental knowledge of materials and manufacturing techniques, an informed decision is made to identify the most suitable materials and processes for the product's successful realization.

## 5.1 Selection of Materials for Different Sections

The selection of materials for different sections of a product or structure is a critical engineering decision that directly impacts its performance, durability, and overall success. Different sections often experience varying loads, environments, and functional requirements.

Table 5.1 Qualitative material selection for the parts

| Section | Parts | Material Selection | Option for Other Parts | Reasons behind Selection |
|---|---|---|---|---|
| Base | Base Plate | Mild Steel | Aluminum, Cast Iron | Sturdiness and Strength, Machinability, Weldability, Corrosion Resistance, Vibration Damping |
| | T-Frame | Aluminum | Aluminum, Stainless Steel | Weldability, Machinability, Strength, Cost, Lightweight |

| | | | | |
|---|---|---|---|---|
| | Rib | Aluminum | Stainless Steel, CFRP | Rigidity, Strength, Dimensional Stability, Compatibility |
| Mechanism | Reciprocating Rod | Aluminum | Aluminum, Chrome Steel, Mild Steel | High compressive strength, Corrosion resistance, Machinability |
| | Rotating Shaft | Aluminum | High-strength low-alloy (HSLA) steel, Titanium alloys | Ductile, Tough, Cost-effective, Good Weldability, Lightweight |
| | Hand Paddle | Aluminum | Plastic, Aluminum, Reinforced composites | Good strength-to-weight ratio, Moderate flexibility |
| | Bearing | Stainless Steel | Chrome Steel, Brass | Durability, Low maintenance, Corrosion resistance |
| | Sliding yoke | Aluminum | Mild Steel, Cast Iron, Aluminum Alloy, Brass | Reduced Friction, Wear resistance, Lightweight |
| | Circular Plate | Aluminum | Stainless Steel, Aluminum, Composite material, Plastic | Machinability, Weldability, Lightweight |
| | Plunger | Nylon | Plastic | Cheap, Good compressive strength, Lightweight |
| Cutting Chamber | Cutting Blade | Stainless Steel | Mild Steel, Chrome Steel | Corrosion resistance, Strength, Durability, Hygiene properties, Cost-effectiveness, and Low maintenance |
| | Cutter Frame | Plastic | Mild Steel, Chrome Steel | Corrosion resistance, Aesthetic appearance, low maintenance |
| | Cutting Zone | Aluminum | Wood, Mild Steel | Lightweight, Corrosion resistance |

### 5.2 Manufacturing process selection for the parts

Choosing the most optimal manufacturing method for each component of the product holds significant importance. This is crucial in order to minimize production costs, avoid unnecessary metallurgical alterations and material wastage, and enhance overall performance. Investing ample time in this selection process is essential. Employing cost-effective, adaptable, and appropriate processes facilitates efficient and repetitive production of the product. On the other hand, employing intricate and inflexible processes can escalate the product's overall cost substantially. In some cases, outsourcing standard parts readily available in the market can be a viable option, especially if it proves to be more cost-effective than producing them in-house.

Table 5.2 Manufacturing process selection for the parts

| Section | Parts | Possible Manufacturing Process | Make / Outsource | Selected Manufacturing Process | Reasons Behind Selection |
|---|---|---|---|---|---|
| Base | Base Plate | Metal cutting, Casting | Make | Metal cutting | Available, Cheaper |
| | T-Frame and Hinge | Metal cutting, Casting | Make | Metal cutting | Available, Cheaper |
| Mechanism | Reciprocating Rod | Cutting & Turning, Casting, Forging | Make | Cutting & Turning | Available |
| | Rotating Shaft | Metal cutting, Casting | Make | Metal cutting | Cheaper, Available |
| | Hand Paddle | Metal cutting, Casting | Make | Metal cutting | Available, Cheaper |
| | Bearing | | Outsource | | Available |
| | Sliding yoke | Metal Cutting, Forging, Casting | Make | Metal Cutting | Cost Effective, Available |
| | Circular Plate | Metal cutting, Casting | Make | Metal cutting | Cost Effective, Available |
| | Plunger | Cutting, Sawing, Laser cutting | Make | Cutting | Cost effective, Available |

| | | | | | |
|---|---|---|---|---|---|
| Cutting Chamber | Cutting Blade | Metal cutting | Outsource | | Cost effective |
| | Cutter Frame | Metal cutting, Casting | Outsource | | Cheaper, available |
| | Cutting Zone | Metal cutting, Extrusion, Injection Molding | Make | Metal cutting | Cost efficient, Available |

### 5.3 Qualitative Analysis of Parts Joining Methods Selection

There are three main categories of joints: permanent, semi-permanent, and temporary. Part joining is essential for a technique of product development. Therefore, it is important to consider the possibility of operation maintenance and modification flexibility. The tables for choosing the connecting method for "Dual Sided Vegetable Cutter" are as follows:

Table 5.3 Joint method selection table for Dual Sided Vegetable Cutter

| Joining Parts | Type of Joint | Joining Method Options | Joint Selected | Reason Behind Selection |
|---|---|---|---|---|
| Rotating shaft and Circular plate | Permanent | Acetylene Gas Welding, MIG Welding | Acetylene Gas Welding | Cost-effectiveness, High strength |
| Sliding yoke and Reciprocating shaft | Permanent | Acetylene Gas Welding, MIG Welding | Acetylene Gas Welding | Cost-effectiveness, High strength |
| Hand Peddle and rotating Shaft | Temporary | Nut Bolt, Allen screw | Allen screw | Modular, adjustable Tightness |
| Reciprocating Shaft and Plunger | Temporary | Nut Bolt, Allen screw | Allen screw | Modular, adjustable Tightness, Shock, and Vibration Resistance |
| Hinge and T-Frame | Temporary | Nut Bolt, Allen screw | Allen screw | Simple Installation, Low cost, Adjustable tightness |
| Cutting Zone and Base Plate | Temporary | Nut Bolt, Allen screw | Allen screw | Modular, adjustable Tightness, Shock, and Vibration Resistance |

| | | | | |
|---|---|---|---|---|
| T-frame and Shaft | Temporary | Ball Bearing | Ball Bearing | Ease of rotation, reduces friction strength to the joint |

Table 5.4: Finishing process selection table for Dual Sided Vegetable Cutter

| **Finishing Parts** | **Finishing process option** | **Process selected** | **Reason behind Selection** |
|---|---|---|---|
| All components | Non-precision grinding and polishing, precision grinding | Non-precision grinding and polishing | Cost-effective and required less time |

### 5.4 Conclusion

The qualitative analysis of the material, manufacturing process, and joining process selection requires a comprehensive understanding of the product's functional requirements, environmental conditions, and production constraints. By carefully considering these factors and their interactions, engineers can make optimal decisions that result in well-designed, cost-effective, and reliable products.

# Chapter-06

# Material, Manufacturing Process and Joining Process Selection Using Weighted Average method

## 6.1 Introduction

Material selection is an essential aspect of product design and development. Product design is limited by available materials. The right material can make a product more durable, lightweight, efficient, and aesthetically pleasing. It can also help to reduce the environmental impact of the product. Conversely, selecting inappropriate ones can result in catastrophic failure and waste of both time and money. In the previous chapter, we deployed quantitative analysis to select materials, manufacturing and welding methods based on intuition alone. Therefore, we back our decisions through quantitative analysis.

We are going to use the weighted average method to do the quantitative analysis. The weighted average method is a systematic approach used in material selection to objectively evaluate and compare different materials based on multiple criteria or properties. This method helps designers make informed decisions by considering various factors and assigning different levels of importance or "weights" to each criterion. By using the weighted average method, designers can systematically evaluate materials based on a holistic view of various factors.

## 6.2 List of Parts for Each Sub-assembly

**(i) Body**

1. Base Plate
2. T Frame

**(ii) Mechanism**

1. Reciprocating Rod
2. Rotating Shaft
3. Hand Paddle
4. Bearing
5. Sliding Yoke
6. Circular Plate
7. Plunger

**(iii) Cutting Chamber**

1. Cutting Blade
2. Cutter Frame
3. Cutting Zone

### 6.3 Equations

1. Relative Emphasis Coefficient,

$$\alpha = \frac{\text{No.of positive decisions acquired by criteria}}{\text{Total no.of positive decisions}}$$

2. For properties to be maximized

$$\text{Scaled Property, } \beta = \frac{\text{Numerical value of property}}{\text{Maximum value in list}} \times 100$$

3. For properties to be minimized,

$$\text{Scaled Property, } \beta = \frac{\text{Minimum value in list}}{\text{Numerical value of property}} \times 100$$

4. Weighted score = $\text{Relative emphasis coefficient } (\alpha) \times \text{ Scaled property } (\beta)$

5. Performance index, $\gamma = \sum \text{Weighted score } (\alpha \times \beta)$

### 6.4 Likert Scale

A Likert scale is a widely used psychometric scale in social science research and surveys for measuring people's attitudes, opinions, or perceptions. The scale provides a way to quantify and measure subjective experiences, such as agreement, satisfaction, or frequency of occurrence.

A typical Likert scale consists of a series of statements or items that express different levels of agreement or disagreement, satisfaction or dissatisfaction, or other subjective responses. Respondents are asked to indicate their agreement or disagreement with each statement by selecting various options. In this chapter, we are going to use the Likert scale for those criteria that can't be assigned with numerical values. The scale is given below:

Table 6.1: Likert Scale

| | |
|---|---|
| Very Good | 5 |
| Good | 4 |
| Moderate | 3 |
| Poor | 2 |
| Very Poor | 1 |

## 6.5 Quantitative Analysis of Material Selection of Dual Sided Vegetable Cutter

### 6.5.1 Material Selection for T Frame, Rib, Reciprocating Rod, Rotating Shaft, Hinge, Cutting Chamber, Sliding Yoke and Circular Plate

Table 6.2: List of numerical values of material properties

| **Property** | **Mild Steel** | **Cast Iron** | **Aluminum** |
|---|---|---|---|
| Tensile Strength (MPa) | 420 | 207 | 240 |
| Compressive Strength (MPa) | 250 | 650 | 400 |
| Density (kg/m$^3$) | 7870 | 7150 | 2680 |
| Elastic Modulus (GPa) | 205 | 90 | 69.3 |

Table 6.3: List of selection criteria with values from Likert Scale

| **Property** | **Mild Steel** | **Cast Iron** | **Aluminum** |
|---|---|---|---|
| Surface Finish | 4 | 2 | 5 |
| Cost | 2 | 1 | 4 |
| Corrosion Resistance | 3 | 2 | 4 |
| Weldability | 5 | 2 | 4 |

From these selection criteria, we want to maximize Tensile Strength, Corrosion Resistance, Surface Finish, and Weldability and to minimize density and Cost.

Table 6.4: Determination of relative importance of material selection criteria for T Frame, Rib, Reciprocating Rod, Rotating Shaft, Hinge, Sliding Yoke, cutting chamber and Circular Plate using Digital Logic Method

| **Selection Criteria** | **Number of Positive Decisions, $N = n(n-1) \div 2 = 15$** | | | | | | | | | | | | | | | **Positive Decisions** | **Relative Emphasis Coefficient α** |
|---|---|---|---|---|---|---|---|---|---|---|---|---|---|---|---|---|---|
| | 1 | 2 | 3 | 4 | 5 | 6 | 7 | 8 | 9 | 10 | 11 | 12 | 13 | 14 | 15 | | |
| Tensile Strength | 0 | 0 | 1 | 0 | 0 | | | | | | | | | | | 1 | 0.067 |
| Density | 1 | | | | | 1 | 0 | 0 | 0 | | | | | | | 2 | 0.133 |
| Surface Finish | | 1 | | | | 0 | | | | 1 | 0 | 1 | | | | 3 | 0.2 |
| Cost | | | 0 | | | | 1 | | | 0 | | | 0 | 1 | | 2 | 0.133 |
| Corrosive Resistance | | | | 1 | | | | 1 | | | 1 | | 1 | | 0 | 4 | 0.268 |
| Weldability | | | | | 1 | | | | 1 | | | 0 | | 0 | 1 | 3 | 0.2 |
| Number of total positive decisions | | | | | | | | | | | | | | | | 15 | $\sum \alpha = 1$ |

The above chart shows the digital logic method for material selection of different components. We have selected Tensile Strength, Elastic Modulus, Surface Finish, Cost, Corrosive Resistance, Weldability as the main criteria for selecting between the three materials Mild steel, Cast iron and Aluminum. Of all the criteria, Corrosion resistance has the highest number of positive decisions. As a result, it has the highest value of relative emphasis coefficient α. At the same time, Tensile Strength, Density, Surface finish and Cost have the lowest number of positive decisions resulting in attaining the lowest value of relative emphasis coefficient.

Table 6.5: Calculation of the performance index for material selection for Base T Frame, Rib, Reciprocating Rod, Rotating Shaft, Hinge, Cutting Chamber, Sliding Yoke and Circular Plate

| **Selection Criteria** | **Weighted Factor, α** | **Mild Steel** | | **Cast Iron** | | **Aluminum** | |
|---|---|---|---|---|---|---|---|
| | | **Scaled Property β** | **Weighted Score αβ** | **Scaled Property β** | **Weighted Score αβ** | **Scaled Property β** | **Weighted Score αβ** |
| Tensile Strength | 0.067 | 100 | 6.7 | 49.28 | 3.3 | 57.14 | 3.83 |
| Density | 0.133 | 34.05 | 4.53 | 37.48 | 4.98 | 100 | 13.3 |
| Surface Finish | 0.2 | 80 | 16 | 40 | 8 | 100 | 20 |
| Cost | 0.133 | 50 | 6.65 | 100 | 13.30 | 25 | 3.33 |
| Corrosive Resistance | 0.268 | 75 | 20.10 | 50 | 13.40 | 100 | 26.8 |
| Weldability | 0.2 | 100 | 20 | 40 | 8 | 80 | 16 |
| Material Performance Index | | | 73.98 | | 50.98 | | 83.26 |

For the manufacturing of the T Frame, Rib, Reciprocating Rod, Rotating Shaft, Hinge, Cutting Chamber, Sliding Yoke and Circular Plate Aluminum has the highest weighted average score than Cast Iron and Mild Steel. So, Aluminum is selected as the manufacturing material.

### 6.5.2 Material Selection for Cutting Blade

Table 6.6: List of numerical values of material property

| **Property** | **Stainless steel** | **Mild steel** | **Chrome steel** |
|---|---|---|---|
| Tensile Strength (MPa) | 505 | 420 | 700 |
| Compressive Strength (MPa) | 420 | 250 | 831 |
| Density (kg/m$^3$) | 7850 | 7870 | 7850 |
| Elastic Modulus (GPa) | 200 | 205 | 205 |

Table 6.7: Lists of selection criteria with values from Likert scale.

| Property | Stainless steel | Mild steel | Chrome steel |
|---|---|---|---|
| Surface Finish | 4 | 3 | 4 |
| Cost | 4 | 2 | 5 |
| Corrosion Resistance | 5 | 2 | 3 |
| Weldability | 4 | 5 | 2 |

From these selection criteria, we want to maximize Compressive Strength, Corrosion Resistance, Surface Finish, Elastic Modulus, and Weldability and to minimize Cost.

Table 6.8: Determination of relative importance of material selection for Cutting Blade

| **Selection Criteria** | **Number of Positive Decisions, N=n(n-1)/2=15** | | | | | | | | | | | | | | | **Positive Decisions** | **Relative Emphasis Coefficient, α** |
|---|---|---|---|---|---|---|---|---|---|---|---|---|---|---|---|---|---|
| | 1 | 2 | 3 | 4 | 5 | 6 | 7 | 8 | 9 | 10 | 11 | 12 | 13 | 14 | 15 | | |
| Compressive Strength | 1 | 1 | 0 | 1 | 1 | | | | | | | | | | | 4 | 0.267 |
| Elastic Modulus | 0 | | | | | 1 | 1 | 0 | 1 | | | | | | | 3 | 0.2 |
| Surface Finish | | 0 | | | | 0 | | | | 0 | 0 | 1 | | | | 1 | 0.066 |
| Cost | | | 1 | | | | 0 | | | 1 | | | 0 | 0 | | 2 | 0.133 |
| Corrosion Resistance | | | | 0 | | | | 1 | | | 1 | | 1 | | 1 | 4 | 0.267 |
| Weldability | | | | | 0 | | | | 0 | | | 0 | | 1 | 0 | 1 | 0.067 |
| Number of total positive decisions | | | | | | | | | | | | | | | | 15 | $\alpha = 1$ |

The above chart shows the digital logic method for the material selection of different components. We have selected Compressive Strength, Elastic Modulus, Surface Finish, Cost, Corrosion Resistance, and Weldability as the main criteria for selecting between the three materials Stainless steel, Mild steel, and Chrome steel. Of all the criteria, Compressive strength and Corrosion resistance have the highest number of positive decisions. As a result, they have the highest value of relative emphasis coefficient α. At

the same time, Surface finish and Weldability have the lowest number of positive decisions resulting in attaining the lowest value of relative emphasis coefficient.

Table 6.9: Calculation of the performance index for material selection for Cutting Blade

| **Selection Criteria** | **Weighted Factor, α** | **Stainless steel** | | **Mild Steel** | | **Chrome steel** | |
|---|---|---|---|---|---|---|---|
| | | **Scaled Property β** | **Weighted Score αβ** | **Scaled Property β** | **Weighted Score αβ** | **Scaled Property β** | **Weighted Score αβ** |
| Compressive Strength | 0.267 | 50.50 | 13.63 | 30.07 | 8.03 | 100 | 26.7 |
| Elastic Modulus | 0.200 | 97.56 | 19.50 | 100 | 20.0 | 100 | 20.0 |
| Surface Finish | 0.066 | 80 | 5.28 | 60 | 3.96 | 80 | 5.28 |
| Cost | 0.133 | 50 | 6.65 | 100 | 13.3 | 40 | 5.32 |
| Corrosion Resistance | 0.267 | 100 | 26.70 | 40 | 10.68 | 60 | 16.02 |
| Weldability | 0.067 | 80 | 5.36 | 100 | 6.7 | 40 | 2.64 |
| Material Performance Index | | | 77.09 | | 62.67 | | 75.96 |

For the manufacturing of the Cutting Blade, Stainless steel has the highest weighted average score than Mild steel and Chrome steel. So, Stainless steel is selected as the manufacturing material.

### 6.5.3 Material Selection for Plunger

Table 6.10: List of numerical values of material property

| **Property** | **Nylon** | **Plastic (PVC)** |
|---|---|---|
| Compressive Strength (MPa) | 80 | 60 |
| Density (kg/m$^3$) | 1120 | 1340 |

Table 6.11: Lists of selection criteria with values from Likert scale.

| **Property** | **Nylon** | **Plastic (PVC)** |
|---|---|---|
| Surface Finish | 4 | 2 |
| Cost | 3 | 2 |
| Aesthetics | 3 | 2 |

From these selection criteria, we want to maximize Compressive Strength, Surface Finish, Aesthetics and to minimize Density, Cost.

Table 6.12: Determination of relative importance of material selection for Plunger

| **Selection Criteria** | **Number of Positive Decisions, $N = n(n-1)/2 = 10$** | | | | | | | | | | **Positive Decisions** | **Relative Emphasis Coefficient, α** |
|---|---|---|---|---|---|---|---|---|---|---|---|---|
| | 1 | 2 | 3 | 4 | 5 | 6 | 7 | 8 | 9 | 10 | | |
| Compressive Strength | 1 | 1 | 0 | 0 | | | | | | | 2 | 0.2 |
| Surface Finish | 0 | | | | 1 | 0 | 1 | | | | 2 | 0.2 |
| Cost | | 0 | | | 0 | | | 1 | 0 | | 1 | 0.1 |
| Density | | | 1 | | | 1 | | 0 | | 0 | 2 | 0.2 |
| Aesthetics | | | | 1 | | | 0 | | 1 | 1 | 3 | 0.3 |
| Number of total positive decisions | | | | | | | | | | | 10 | $\alpha = 1$ |

The above chart shows the digital logic method for material selection of different components. We have selected Compressive Strength, Surface Finish, Cost, Density, Aesthetics as the main criteria for selecting between the two materials PVC and Nylon. Of all the criteria, Aesthetics has the highest number of positive decisions. As a result, it has the highest value of relative emphasis coefficient α. At the same time, Surface finish and Cost have the lowest number of positive decisions resulting in attaining the lowest value of relative emphasis coefficient.

Table 6.13: Calculation of the performance index for material selection for Plunger

| Selection Criteria | Weighted Factor, α | Nylon | | Plastic (PVC) | |
|---|---|---|---|---|---|
| | | Scaled Property β | Weighted Score αβ | Scaled Property β | Weighted Score αβ |
| Compressive Strength | 0.2 | 100 | 20 | 75 | 15 |
| Surface Finish | 0.2 | 100 | 20 | 50 | 10 |
| Cost | 0.1 | 100 | 10 | 66.7 | 6.67 |
| Density | 0.2 | 83.6 | 16.72 | 100 | 20 |
| Aesthetics | 0.3 | 100 | 30 | 66.67 | 20 |
| Material Performance Index | | | 96.72 | | 71.67 |

For the manufacturing of Plunger, Nylon has the highest weighted average score than Plastic (PVC). So, Nylon is selected as the manufacturing material.

### 6.5.4 Material Selection for Base Plate

Table 6.14: List of numerical values of material properties

| Property | Mild Steel | Cast Iron | Aluminum |
|---|---|---|---|
| Tensile Strength (MPa) | 420 | 207 | 240 |
| Compressive Strength (MPa) | 250 | 650 | 400 |
| Density (kg/m$^3$) | 7870 | 7150 | 2680 |
| Elastic Modulus (GPa) | 205 | 90 | 69.3 |

Table 6.15: List of selection criteria with values from Likert Scale

| Property | Mild Steel | Cast Iron | Aluminum |
|---|---|---|---|
| Surface Finish | 4 | 2 | 5 |
| Cost | 2 | 1 | 4 |
| Corrosion Resistance | 3 | 2 | 4 |
| Weldability | 5 | 2 | 4 |

From these selection criteria, we want to maximize Tensile Strength, Corrosion Resistance, Surface Finish, Elastic Modulus, and Weldability and to minimize Cost.

Table 6.16: Determination of relative importance of material selection criteria for Base Plate

| **Selection Criteria** | **Number of Positive Decisions, $N = n(n-1) \div 2 = 15$** | | | | | | | | | | | | | | | **Positive Decisions** | **Relative Emphasis Coefficient α** |
|---|---|---|---|---|---|---|---|---|---|---|---|---|---|---|---|---|---|
| | 1 | 2 | 3 | 4 | 5 | 6 | 7 | 8 | 9 | 10 | 11 | 12 | 13 | 14 | 15 | | |
| Tensile Strength | 0 | 1 | 1 | 0 | 0 | | | | | | | | | | | 2 | 0.133 |
| Elastic Modulus | 1 | | | | | 1 | 0 | 0 | 0 | | | | | | | 2 | 0.133 |
| Surface Finish | | 0 | | | | 0 | | | | 1 | 0 | 1 | | | | 2 | 0.133 |
| Cost | | | 0 | | | | 1 | | | 0 | | | 0 | 1 | | 2 | 0.133 |
| Corrosion Resistance | | | | 1 | | | | 1 | | | 1 | | 1 | | 0 | 4 | 0.268 |
| Weldability | | | | | 1 | | | | 1 | | | 0 | | 0 | 1 | 3 | 0.2 |
| Number of total positive decisions | | | | | | | | | | | | | | | | 15 | $\sum \alpha = 1$ |

The above chart shows the digital logic method for material selection of different components. We have selected Tensile Strength, Elastic Modulus, Surface Finish, Cost, Corrosive Resistance, Weldability as the main criteria for selecting between the three materials Mild steel, Cast iron and Aluminum. Of all the criteria, Corrosion resistance has the highest number of positive decisions. As a result, it has the highest value of relative emphasis coefficient α. At the same time, Tensile Strength, Elastic Modulus, Surface finish and Cost have the lowest number of positive decisions resulting in attaining the lowest value of relative emphasis coefficient.

Table 6.17: Calculation of the performance index for material selection for Base Plate

| Selection Criteria | Weighted Factor, α | Mild Steel | | Cast Iron | | Aluminum | |
|---|---|---|---|---|---|---|---|
| | | Scaled Property β | Weighted Score αβ | Scaled Property β | Weighted Score αβ | Scaled Property β | Weighted Score αβ |
| Tensile Strength | 0.133 | 100 | 13.30 | 49.28 | 6.55 | 57.14 | 7.60 |
| Elastic Modulus | 0.133 | 100 | 13.30 | 43.90 | 5.84 | 33.80 | 4.50 |
| Surface Finish | 0.133 | 80 | 10.65 | 40 | 5.32 | 100 | 13.3 |
| Cost | 0.133 | 50 | 6.65 | 100 | 13.30 | 25 | 3.33 |
| Corrosive Resistance | 0.268 | 75 | 20.10 | 50 | 13.40 | 100 | 26.8 |
| Weldability | 0.2 | 100 | 20 | 40 | 8 | 80 | 16 |
| Material Performance Index | | | 84 | | 52.41 | | 71.53 |

For the manufacturing of the Base Plate, Mild Steel has the highest weighted average score than Cast Iron and Aluminum. So, Mild Steel is selected as the manufacturing material.

## 6.6 Quantitative analysis for manufacturing Process Selection

### 6.6.1 Manufacturing Process Selection for Base Plate, T-Frame and Hinge, Rib, Reciprocating Rod, Rotating Shaft, Sliding Yoke, Cutting Chamber, Circular Plate and Cutter Frame

Table 6.18: Lists of selection criteria with numerical values from Likert scale for Casting and Metal Cutting.

| Property | Casting | Metal Cutting |
|---|---|---|
| Cost | 4 | 3 |
| Dimensional Accuracy and Precision | 3 | 4 |
| Complexity | 4 | 2 |
| Production Rate | 2 | 4 |
| Surface Finish | 1 | 4 |

From these selection criteria, we want to maximize Dimensional Accuracy and Precision, Production Rate, Surface Finish and to minimize Complexity, Cost.

Table 6.19: Manufacturing Process Selection for Base Plate, T-Frame and Hinge, Rib, Reciprocating Rod, Rotating Shaft, Sliding Yoke, Circular Plate and Cutter Frame using Digital Logic Method

| **Selection Criteria** | **Number of Positive Decisions, $N = n(n-1) \div 2 = 10$** | | | | | | | | | | **Positive Decisions** | **Relative Emphasis Coefficient α** |
|---|---|---|---|---|---|---|---|---|---|---|---|---|
| | 1 | 2 | 3 | 4 | 5 | 6 | 7 | 8 | 9 | 10 | | |
| Cost | 0 | 1 | 0 | 1 | | | | | | | 2 | 0.2 |
| Dimensional Accuracy and Precision | 1 | | | | 0 | 0 | 1 | | | | 2 | 0.2 |
| Complexity | | 0 | | | 1 | | | 0 | 0 | | 1 | 0.1 |
| Production Rate | | | 1 | | | 1 | | 1 | | 0 | 3 | 0.3 |
| Surface Finish | | | | 0 | | | 0 | | 1 | 1 | 2 | 0.2 |
| Number of total positive decisions | | | | | | | | | | | 10 | $\sum \alpha = 1$ |

The above chart shows the digital logic method for manufacturing process selection of different components. We have selected Cost, Dimensional Accuracy and Precision, Complexity, Production Rate, Surface Finish as the main criteria for selecting between the two processes Casting and Metal Cutting. Of all the criteria, Production Rate has the highest number of positive decisions. As a result, it has the highest value of relative emphasis coefficient α. At the same time, Complexity has the lowest number of positive decisions resulting in attaining the lowest value of relative emphasis coefficient.

Table 6.20: Calculation of the performance index for Manufacturing Process Selection for Base Plate, T-Frame and Hinge, Cutting Zone, Rib, Reciprocating Rod, Rotating Shaft, Sliding Yoke, Circular Plate and Cutter Frame

| **Selection Criteria** | **Weighted Factor, α** | **Casting** | | **Metal Cutting** | |
|---|---|---|---|---|---|
| | | **Scaled Property β** | **Weighted Score αβ** | **Scaled Property β** | **Weighted Score αβ** |
| Cost | 0.2 | 75 | 15 | 100 | 20 |
| Dimensional Accuracy and Precision | 0.2 | 75 | 15 | 100 | 20 |
| Complexity | 0.1 | 50 | 5 | 100 | 10 |
| Production Rate | 0.3 | 50 | 15 | 100 | 30 |
| Surface Finish | 0.2 | 25 | 5 | 100 | 20 |
| Material Performance Index | | | 55 | | 100 |

For manufacturing of the Base Plate, T-Frame and Hinge, Rib, Reciprocating Rod, Rotating Shaft, Sliding Yoke, Circular Plate and Cutter Frame, Metal Cutting has higher weighted average score than Casting. So, Metal Cutting is selected as the manufacturing process.

## 6.7 Quantitative Analysis of Permanent Joining Process Selection

### 6.7.1 Joining process selection for Rotating shaft and circular plate, sliding yoke and reciprocating shaft, rib and base plate, hand paddle and rotating shaft, cutting zone and base plate

Table 6.21: Lists of selection criteria with numerical values or values from the Likert scale for TIG Welding & Acetylene Gas Welding

| **Selection criteria** | **TIG** | **Acetylene Gas Welding** |
|---|---|---|
| Cost | 5 | 4 |
| Dimensional accuracy | 5 | 4 |
| Strength | 3 | 5 |
| Availability | 4 | 3 |
| Surface finish | 5 | 5 |

From these criteria, we want to maximize dimensional accuracy, strength, availability and surface finish and minimize cost.

Table 6.22: Determination of Relative Importance of Goals Using Digital Logic Method

| **Selection Criteria** | **Number of Positive Decisions, $N = n(n-1)/2 = 10$** | | | | | | | | | | **Positive Decisions** | **Relative Emphasis Coefficient, α** |
|---|---|---|---|---|---|---|---|---|---|---|---|---|
| | 1 | 2 | 3 | 4 | 5 | 6 | 7 | 8 | 9 | 10 | | |
| Cost | 0 | 0 | 1 | 1 | | | | | | | 2 | 0.2 |
| Dimensional Accuracy | 1 | | | | 0 | 0 | 1 | | | | 2 | 0.2 |
| Strength | | 1 | | | 1 | | | 0 | 1 | | 3 | 0.3 |
| Availability | | | 0 | | | 1 | | 1 | | 0 | 2 | 0.2 |
| Surface Finish | | | | 0 | | | 0 | | 0 | 1 | 1 | 0.1 |
| Number of total positive decisions | | | | | | | | | | | 10 | $\sum \alpha = 1$ |

Table 6.23: Calculation of performance index for joining process selection for Rotating shaft and circular plate, sliding yoke and reciprocating shaft, rib and base plate

| **Selection Criteria** | **Weighted Factor, α** | **TIG** | | **Acetylene Gas Welding** | |
|---|---|---|---|---|---|
| | | **Scaled Property, β** | **Weighted Score, αβ** | **Scaled Property, β** | **Weighted Score, αβ** |
| Cost | 0.2 | 80 | 16 | 100 | 20 |
| Dimensional Accuracy | 0.2 | 100 | 20 | 80 | 16 |
| Strength | 0.3 | 60 | 18 | 100 | 30 |
| Availability | 0.2 | 100 | 20 | 75 | 15 |
| Surface Finish | 0.1 | 100 | 10 | 100 | 10 |
| Material Performance Index | | | 84 | | 91 |

From the table, it is found that the Acetylene Gas welding has the most relative weighted score over TIG Welding. So, Acetylene Gas Welding is selected as the mode of permanent joint of Rotating shaft and circular plate, sliding yoke and reciprocating shaft, rib and base plate.

### 6.8 Quantitative Analysis of Temporary Joining Process Selection

#### 6.8.1 Joining process selection for Reciprocating Shaft and plunger, Hinge and T frame, Base plate and adhesive feet

Table 6.24: Lists of selection criteria with numerical values or values from Likert scale for Allen screw and Riveting

| Selection Criteria | Allen Screw | Riveting |
|---|---|---|
| Cost | 3 | 5 |
| Surface Finish | 3 | 5 |
| Strength | 5 | 4 |
| Design Flexibility | 5 | 3 |
| Availability | 5 | 4 |

From these criteria, we want to maximize surface finish, strength, design flexibility, availability and minimize cost.

Table 6.25: Determination of Relative Importance of Goals Using Digital Logic Method

| **Selection Criteria** | **Number of Positive Decisions, $N = n(n-1)/2 = 10$** | | | | | | | | | | **Positive Decisions** | **Relative Emphasis Coefficient, α** |
|---|---|---|---|---|---|---|---|---|---|---|---|---|
| | 1 | 2 | 3 | 4 | 5 | 6 | 7 | 8 | 9 | 10 | | |
| Cost | 1 | 0 | 1 | 0 | | | | | | | 2 | 0.2 |
| Surface Finish | 0 | | | | 0 | 1 | 0 | | | | 1 | 0.1 |
| Strength | | 1 | | | 1 | | | 1 | 0 | | 3 | 0.3 |
| Design Flexibility | | | 0 | | | 0 | | 0 | | 1 | 1 | 0.1 |
| Availability | | | | 1 | | | 1 | | 1 | 0 | 3 | 0.3 |
| Number of total positive decisions | | | | | | | | | | | 10 | $\sum \alpha = 1$ |

Table 6.26: Calculation of performance index for joining process selection for Reciprocating Shaft and plunger, Hinge and T frame, Base plate and adhesive feet

| Selection Criteria | Weighted Factor, α | Allen screw | | Riveting | |
|---|---|---|---|---|---|
| | | Scaled Property, β | Weighted Score, αβ | Scaled Property, β | Weighted Score, αβ |
| Cost | 0.2 | 100 | 20 | 60 | 12 |
| Surface Finish | 0.1 | 60 | 6 | 100 | 10 |
| Strength | 0.3 | 100 | 30 | 80 | 24 |
| Design Flexibility | 0.1 | 100 | 10 | 60 | 6 |
| Availability | 0.3 | 100 | 30 | 80 | 24 |
| Material Performance Index | | | 96 | | 76 |

From the table, it is found that the Allen screw has the most relative weighted score than Riveting. So, Allen screw is selected as the mode of temporary joint of the above-stated parts.

## 6.9 Quantitative Analysis for Finishing Process Selection

### 6.9.1: Selection of finishing process for Dual Sided Vegetable Cutter

Table 6.27: Lists of selection criteria with numerical values from Likert scale for Precision Grinding and Non-precision Grinding and Polishing

| Selection Criteria | Precision Grinding | Non-precision grinding and Polishing |
|---|---|---|
| Cost | 5 | 3 |
| Smoothness | 5 | 4 |
| Availability | 4 | 5 |
| Material Wastage | 3 | 5 |
| Time Duration | 5 | 4 |

Table 6.28: Determination of Relative Importance of Goals Using Digital Logic Method

| **Selection Criteria** | **Number of Positive Decisions, $N = n(n-1)/2 = 10$** | | | | | | | | | | **Positive Decisions** | **Relative Emphasis Coefficient, α** |
|---|---|---|---|---|---|---|---|---|---|---|---|---|
| | 1 | 2 | 3 | 4 | 5 | 6 | 7 | 8 | 9 | 10 | | |
| Cost | 0 | 0 | 1 | 1 | | | | | | | 2 | 0.2 |
| Smoothness | 1 | | | | 1 | 1 | 0 | | | | 3 | 0.3 |
| Availability | | 1 | | | 0 | | | 1 | 0 | | 2 | 0.2 |
| Material Wastage | | | 0 | | | 0 | | 0 | | 1 | 1 | 0.1 |
| Time Duration | | | | 0 | | | 1 | | 1 | 0 | 2 | 0.2 |
| Number of total positive decisions | | | | | | | | | | | 10 | $\sum \alpha = 1$ |

The above chart shows the digital logic method for Finishing Process selection of different components. We have selected Cost, Smoothness, Availability, Material Wastage, Time Duration as the main criteria for selecting between the two processes Precision Grinding and Non-precision Grinding. Of all the criteria, Smoothness has the highest number of positive decisions. As a result, it has the highest value of relative emphasis coefficient α. At the same time, Material Wastage has the lowest number of positive decisions resulting in attaining the lowest value of relative emphasis coefficient.

Table 6.29: Calculation of performance index for finishing process selection

| **Selection Criteria** | **Weighted Factor, α** | **Precision Grinding** | | **Non-Precision Grinding and Polishing** | |
|---|---|---|---|---|---|
| | | **Scaled Property, β** | **Weighted Score, αβ** | **Scaled Property, β** | **Weighted Score, αβ** |
| Cost | 0.2 | 60 | 12 | 100 | 20 |
| Smoothness | 0.3 | 100 | 30 | 80 | 24 |
| Availability | 0.2 | 80 | 16 | 100 | 20 |
| Material Wastage | 0.1 | 60 | 6 | 100 | 10 |
| Time Duration | 0.2 | 100 | 20 | 80 | 16 |
| Material Performance Index | | | 84 | | 90 |

From the table, it is found that non-precision grinding and polishing has the most relative score over precision grinding. So, Non-precision grinding is selected as the mode of finishing process of the Dual Sided Vegetable Cutter.

# Chapter - 07

# Design Analysis

## 7.1 Introduction

Developing a new product isn't as simple as one might think, rather it takes place in various phases. Plenty of planning, info gathering and communication (to know about customer needs) goes into the development of a product. In the previous chapters, we went through gathering the voice of customers (VoC), Quality Function Deployment (QFD), Assigning Materials and Manufacturing processes. But to bring the product to existence, design assessment is an absolute necessity as well.

In this chapter, we present the 3D model of our product "Dual Sided Vegetable Cutter with Scotch Yoke Mechanism". We developed the prototype and conducted the motion study in SOLIDWORKS. Later we simulated the stress and fatigue life analysis for parts using Ansys Static Structural.

## 7.2 Final Design &Parts of the “Dual Sided Vegetable Cutter”

### 7.2.1 Parts of “Dual Sided Vegetable Cutter”

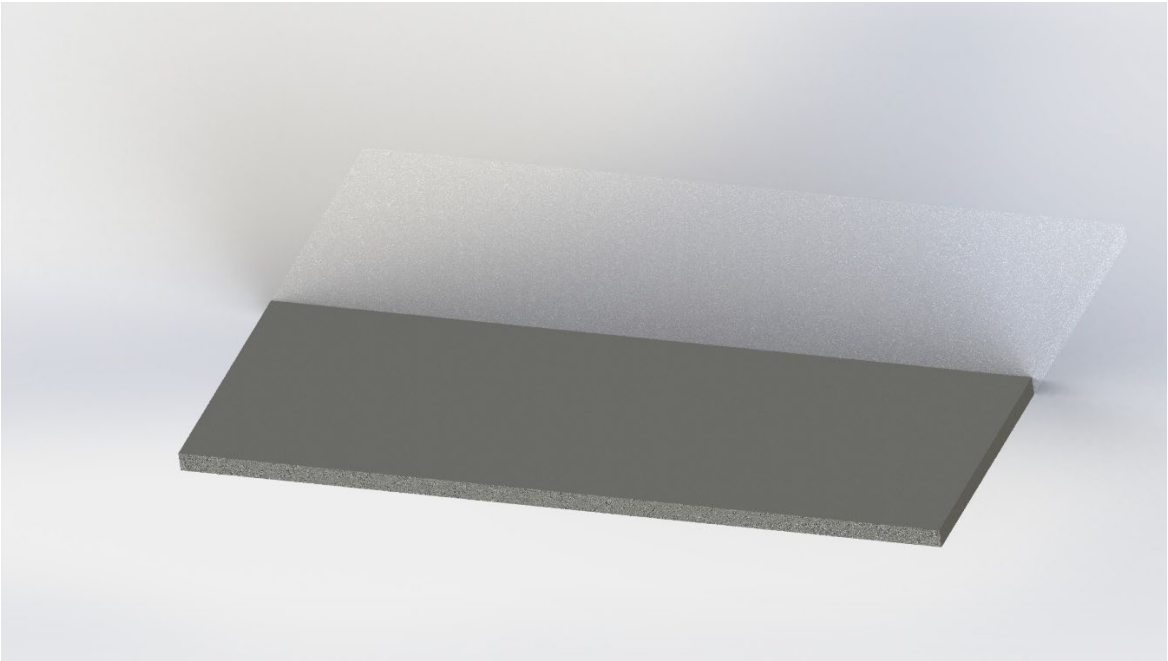

Figure 7.1: Base Plate

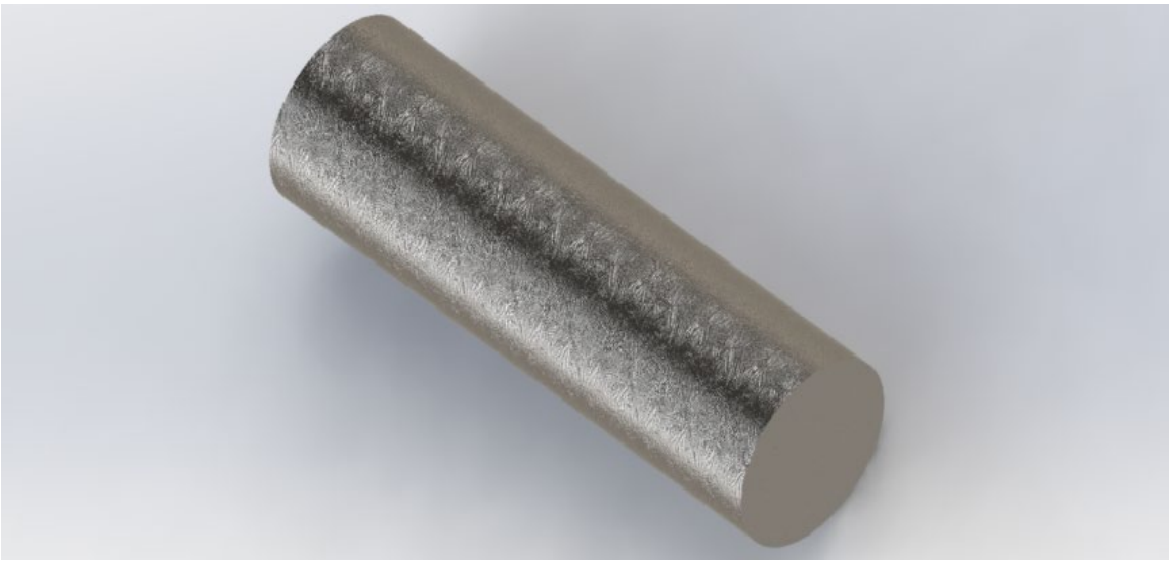

Figure 7.2.1.2: Rotating Shaft

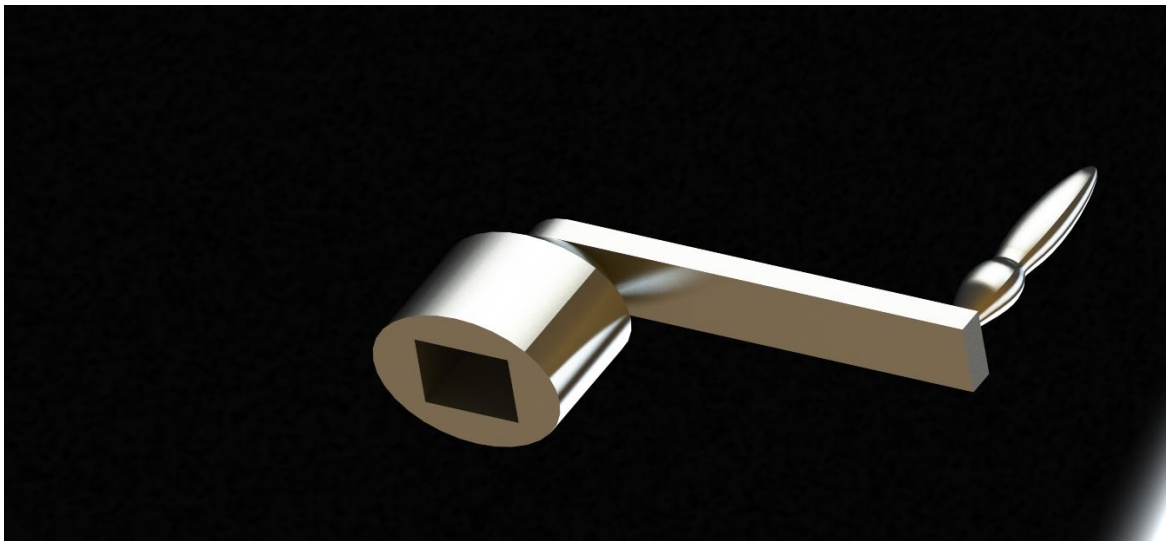

Figure 7.3: Hand Paddle

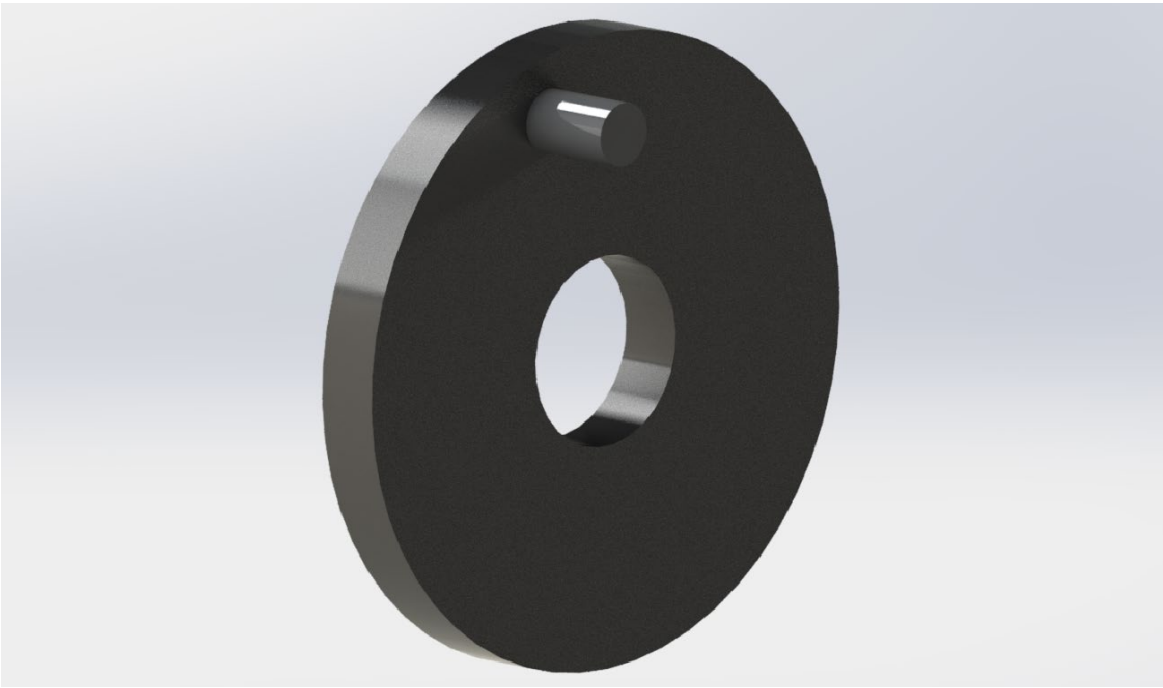

Figure 7.4: Circular Plate

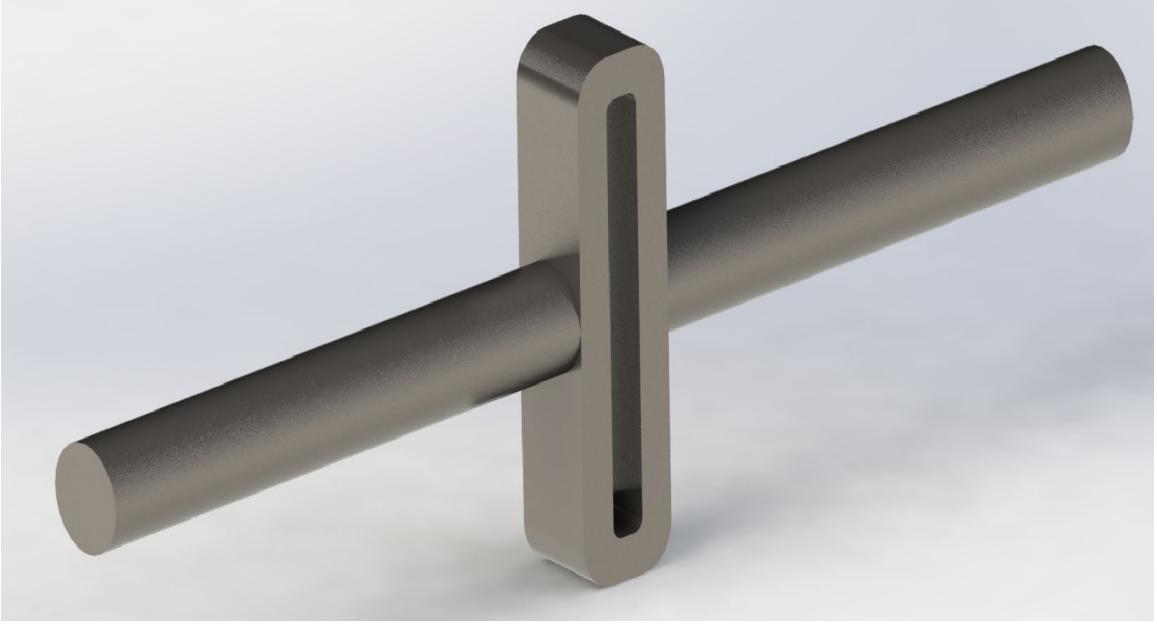

Figure 7.5: Sliding Yoke & Reciprocating Rod

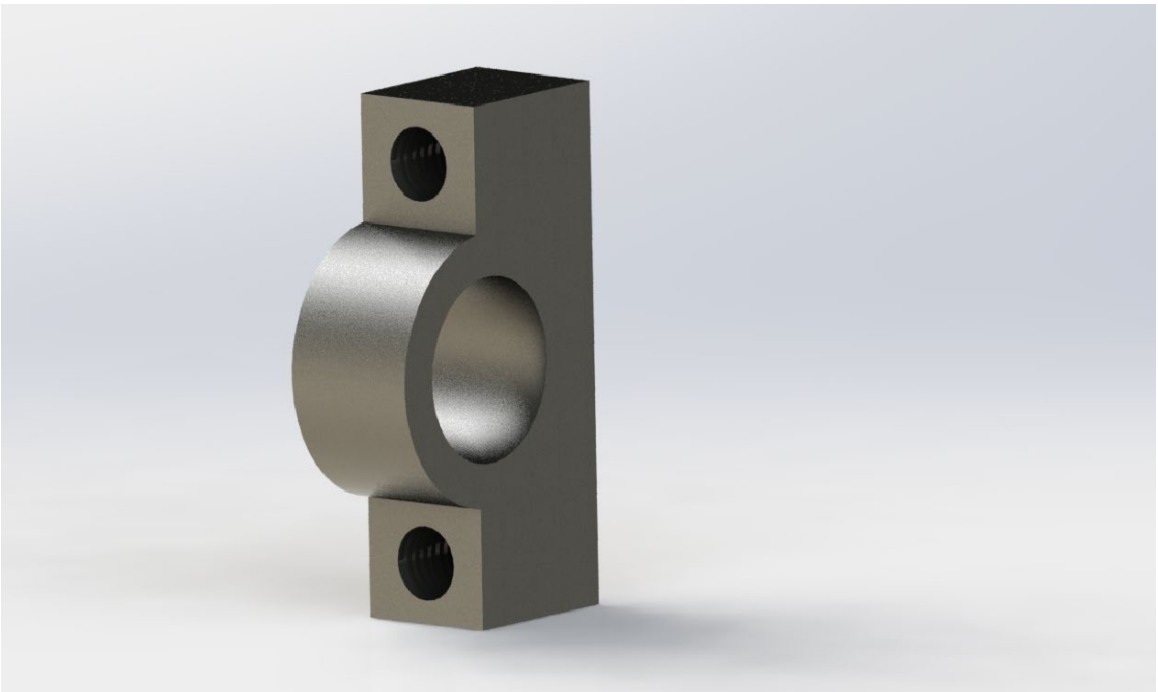

Figure 7.6: Hinge

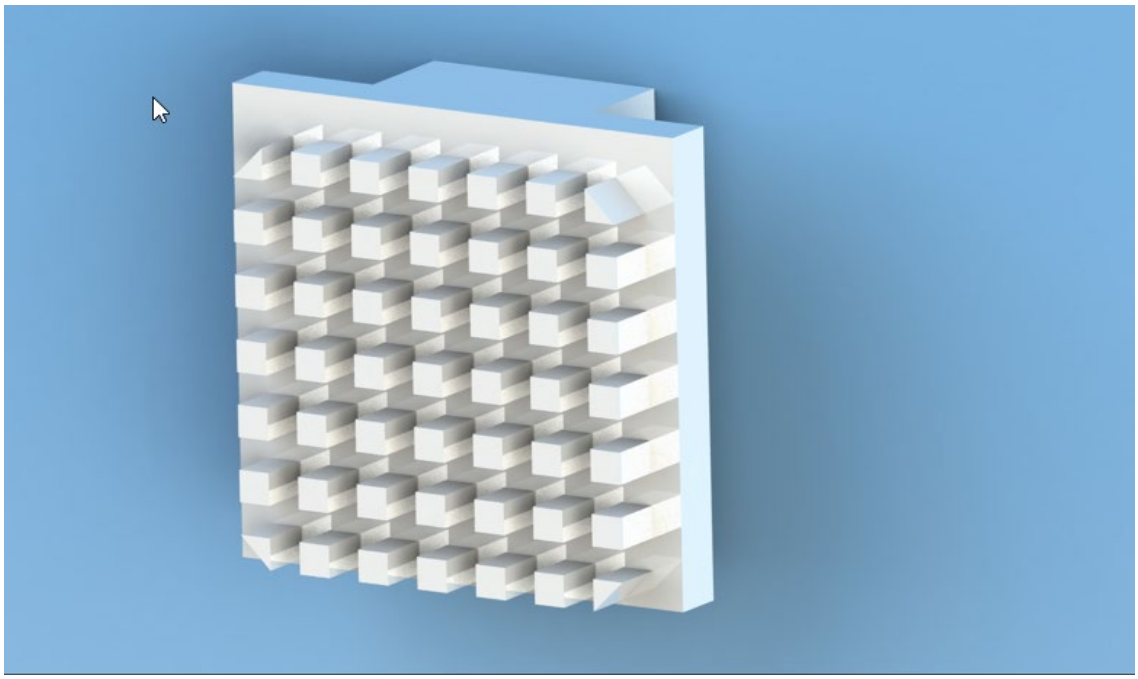

Figure 7.7: Plunger

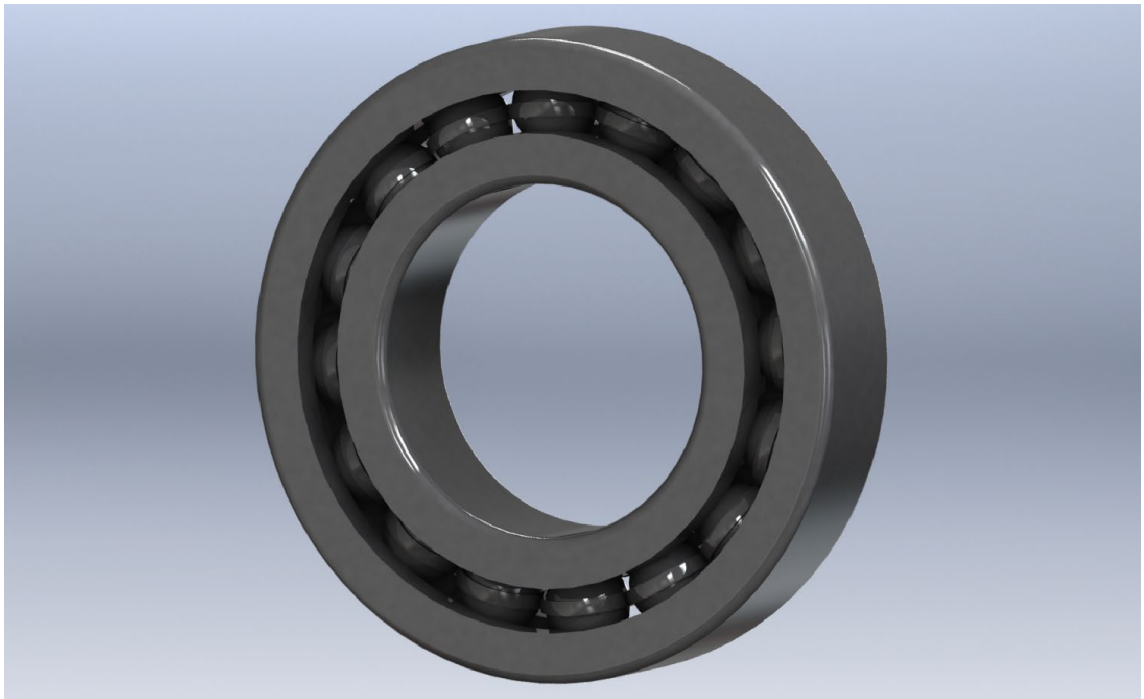

Figure 7.8: Bearing

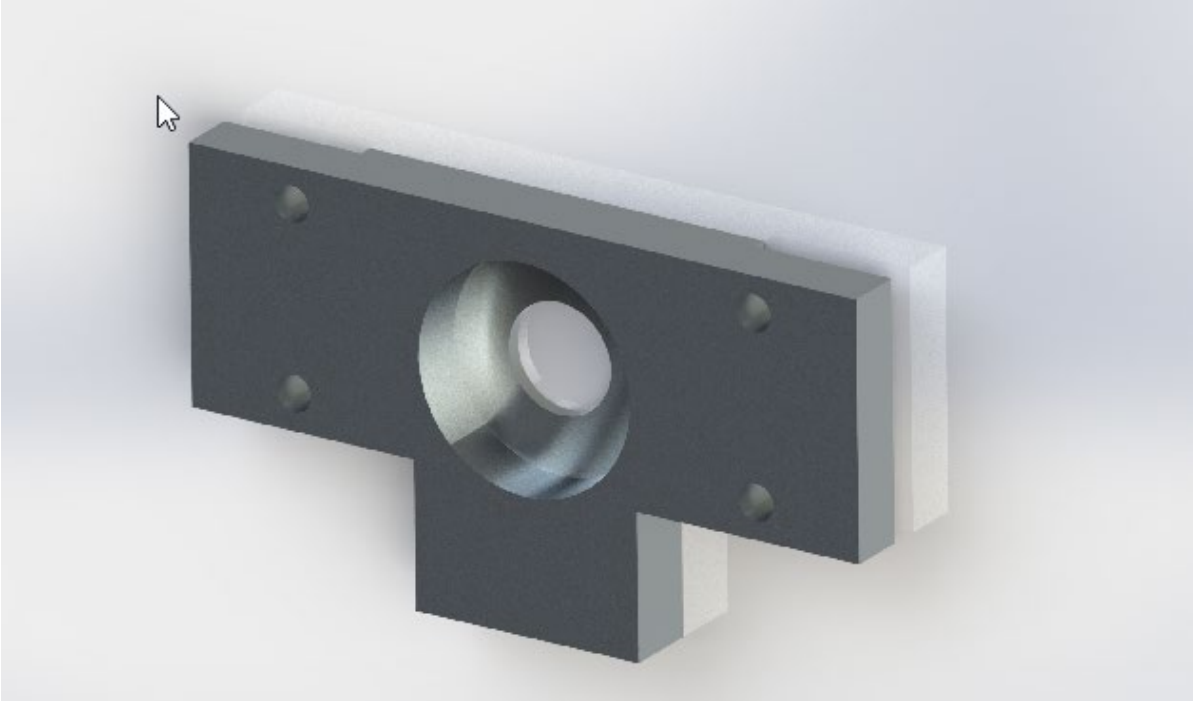

Figure 7.9: T Frame

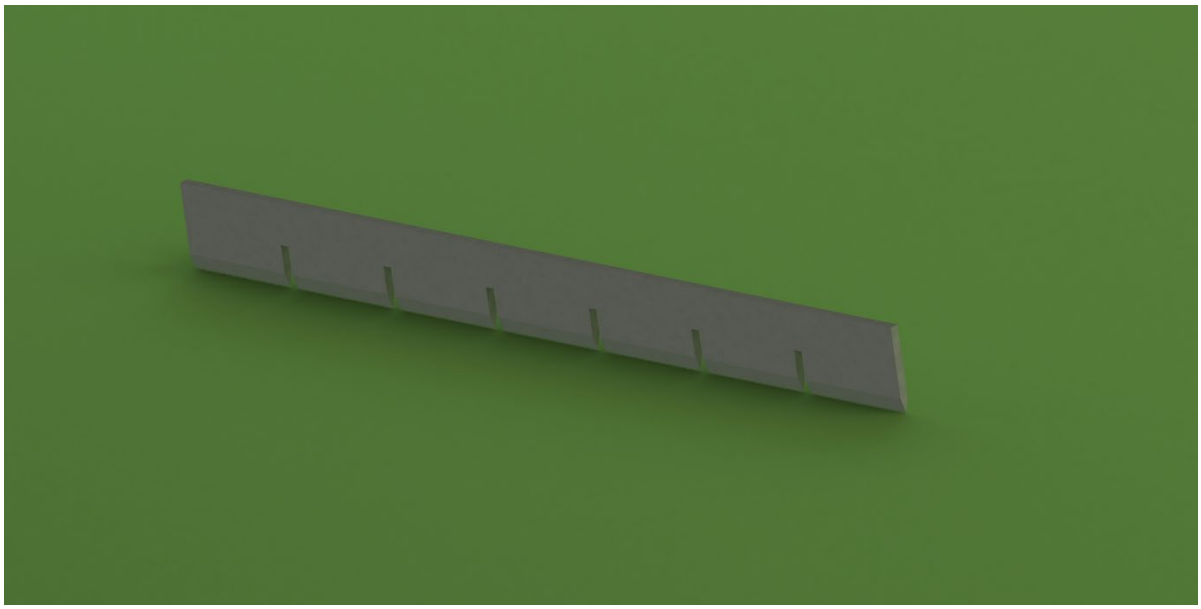

Figure 7.10: Cutting Blade Piece

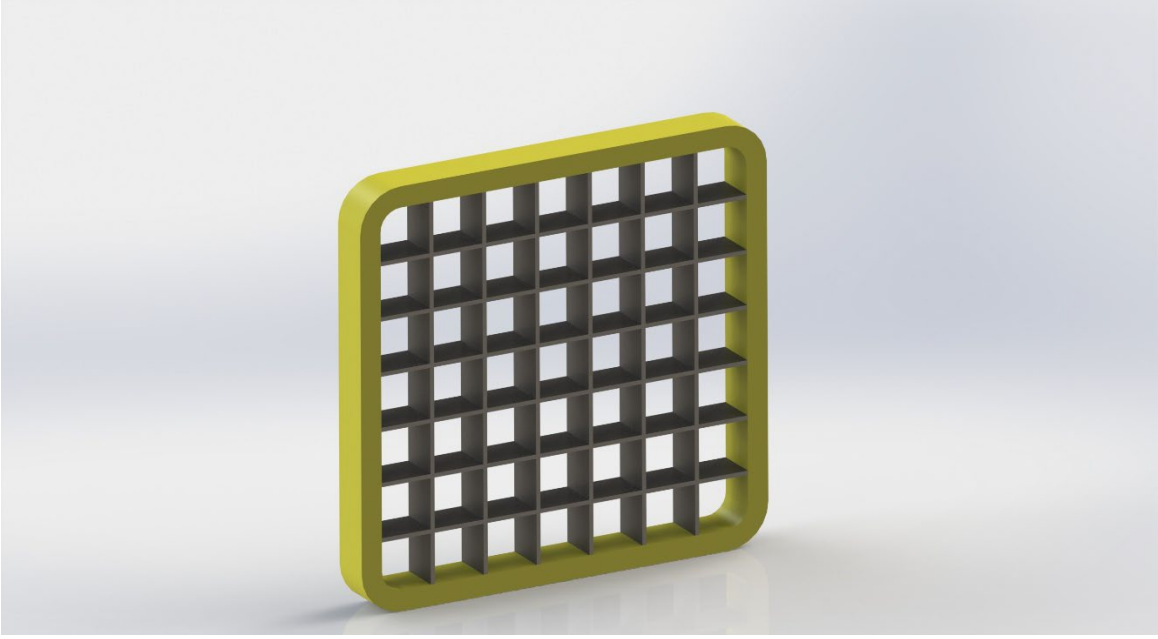

Figure 7.11: Modular Cutting Blade

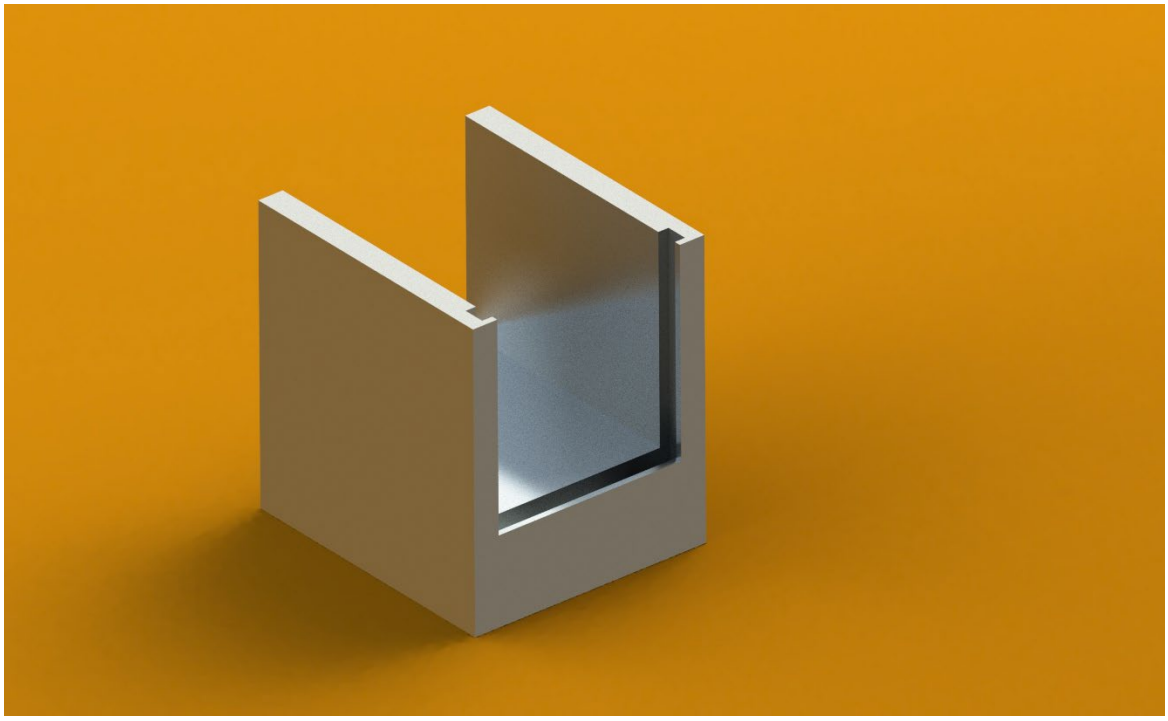

Figure 7.12: Cutting Zone

### 7.2.2 Final Design of "Dual Sided Vegetable Cutter"

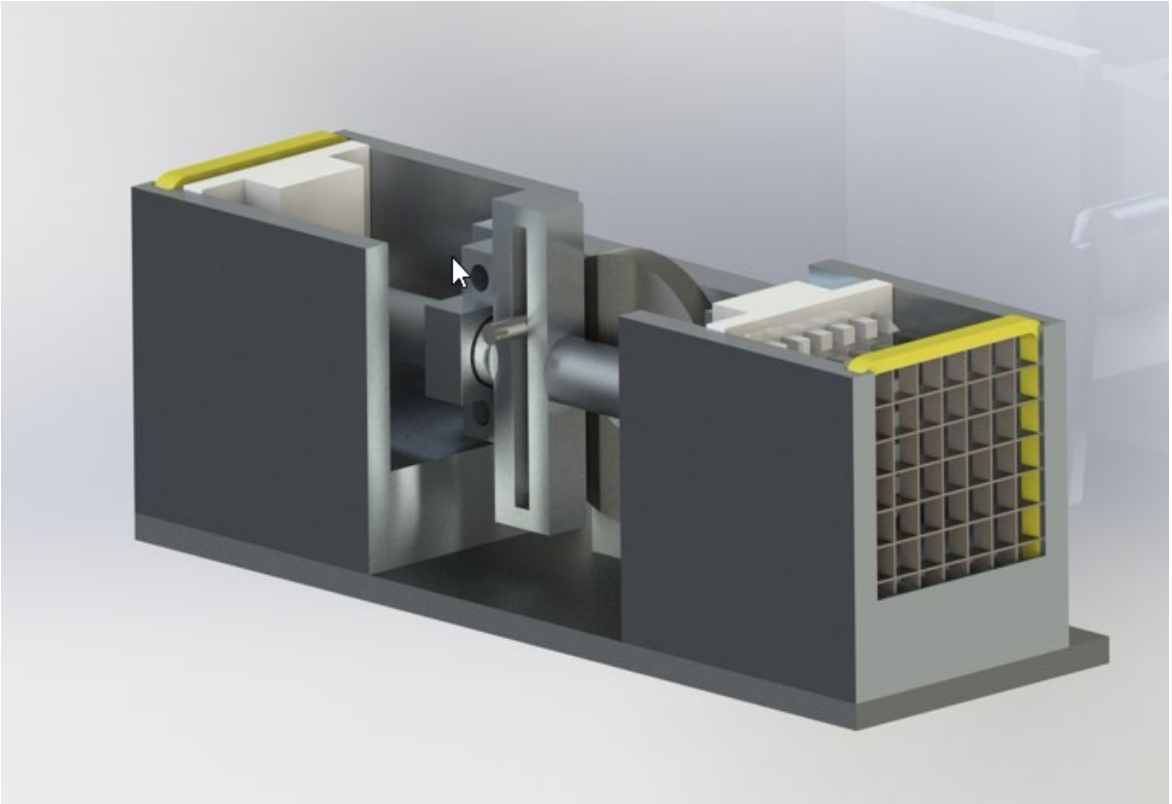

Figure 7.17: Dual Sided Vegetable Cutter

## 7.3 Static Structural Analysis (ANSYS)

### 7.3.1 Static Structural Analysis of Hand Paddle

#### 7.3.1.1 Total Deformation

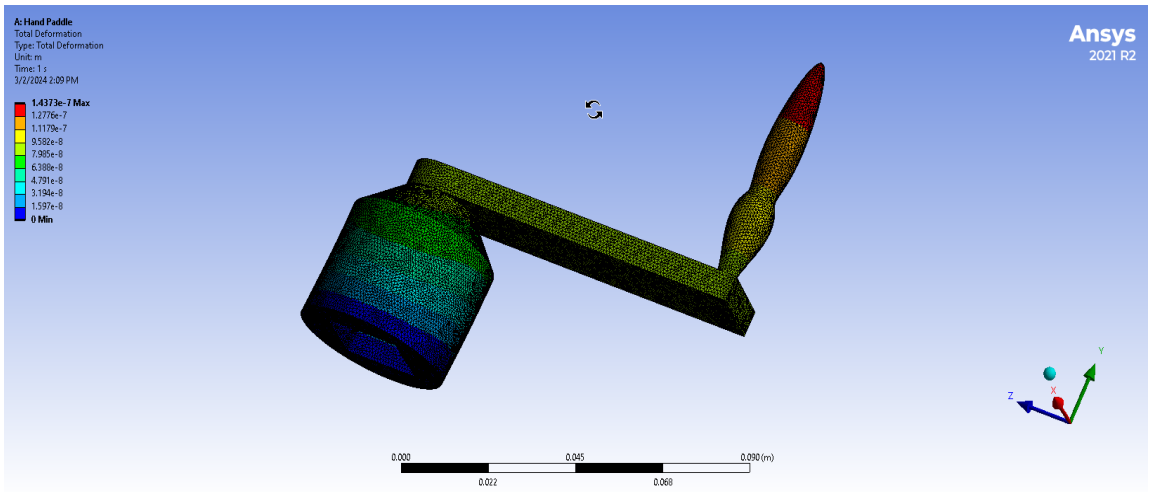


Figure 7.18: Total deformation of Hand Paddle

Table 7.1: Total deformation of Hand Paddle

| Total Deformation(mm) | |
|---|---|
| Minimum | 0 |
| Maximum | 0.00014373 |

#### 7.3.1.2 Equivalent (Von-Mises) Stress

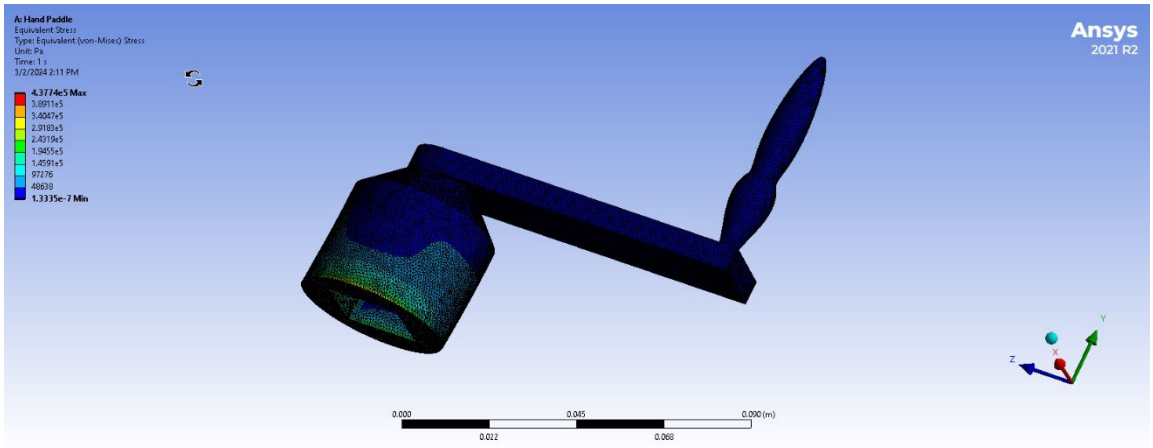


Figure 7.19: Equivalent (Von-Mises) Stress of Hand Paddle

Table 7.2: Equivalent (Von-Mises) Stress of Hand Paddle

| **Equivalent (Von-Mises) Stress (MPa)** | |
|---|---|
| Minimum | $1.3335 \times 10^{-13}$ |
| Maximum | 0.43774 |

### 7.3.1.3 Life

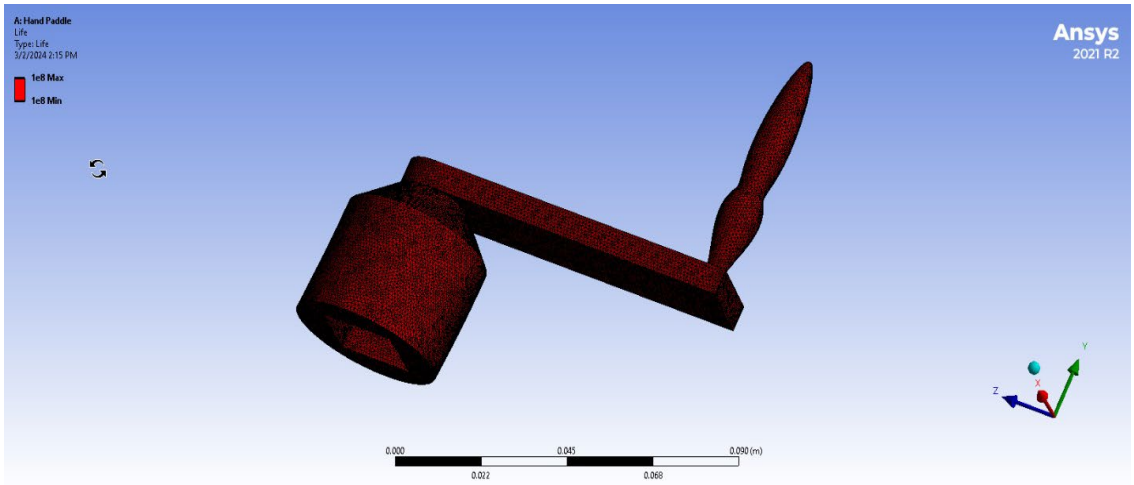


Figure 7.20: Life Cycle of Hand Paddle

Table 7.3: Life Cycle of Hand Paddle

| **Total Cycle** | |
|---|---|
| Minimum | $10^6$ |
| Maximum | $10^6$ |

### 7.3.1.4 Safety Factor

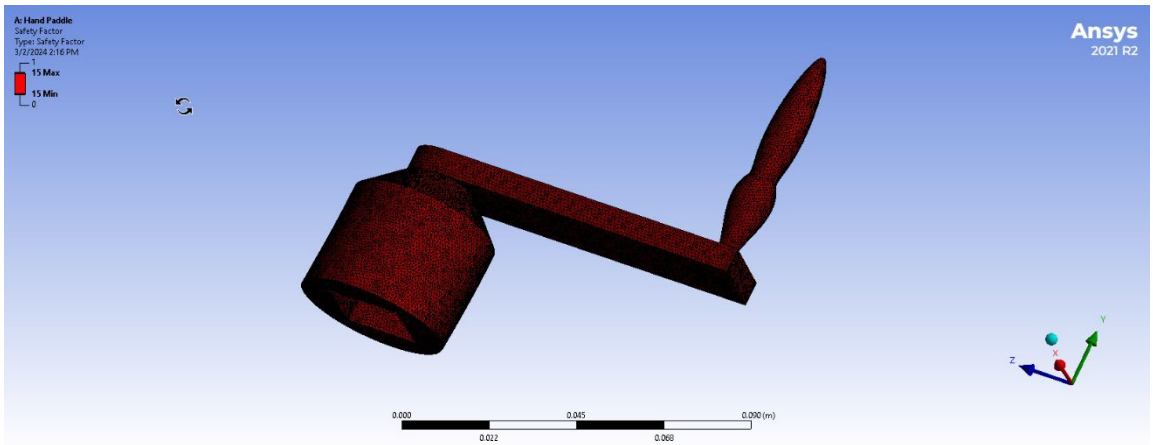


Figure 7.21: Safety Factor of Hand Paddle

Table 7.4: Safety Factor of Hand Paddle

| Safety Factor Value | |
|---|---|
| Minimum | 15 |
| Maximum | 15 |

### 7.3.1.5 Equivalent Alternating Stress

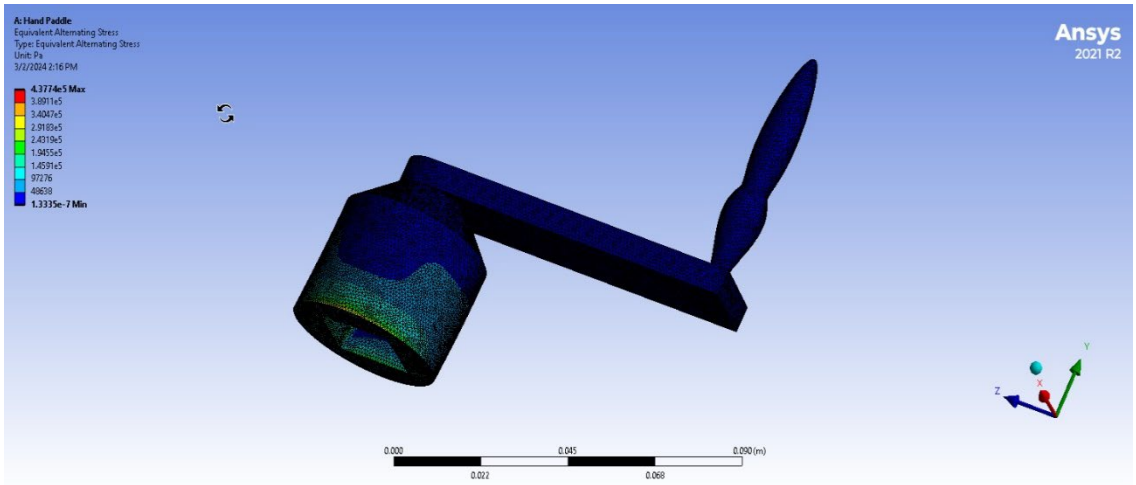


Figure 7.22: Equivalent Alternating Stress of Hand Paddle

Table 7.5: Equivalent Alternating Stress of Hand Paddle

| Equivalent Alternating Stress (MPa) | |
|---|---|
| Minimum | $1.3333 \times 10^{-13}$ |
| Maximum | 0.43777 |

### 7.3.2 Static Structural Analysis of Rotating Shaft

### 7.3.2.1 Total Deformation

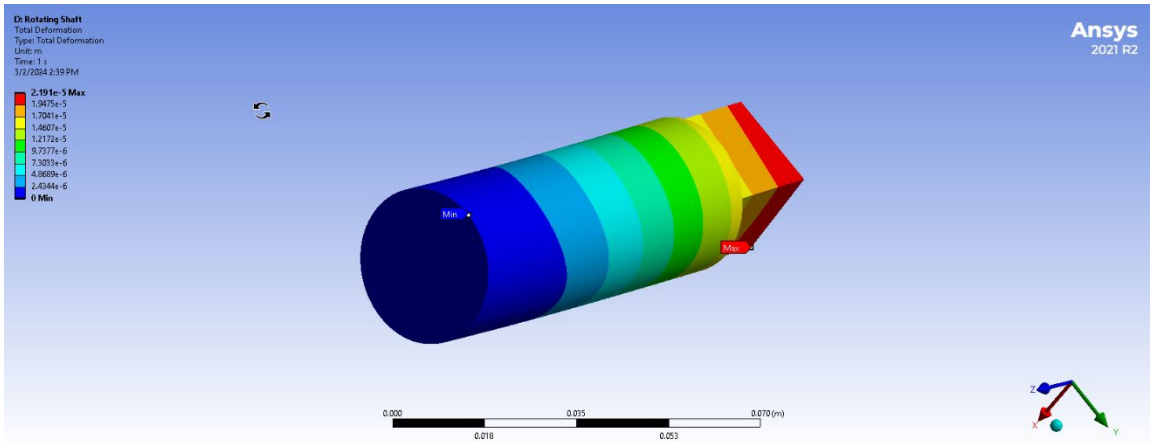


Figure 7.23: Total deformation of Rotating Shaft

Table 7.6: Total deformation of Rotating Shaft

| Total Deformation (mm) | |
|---|---|
| Minimum | 0 |
| Maximum | 0.00219 |

### 7.3.2.2 Equivalent (Von-Mises) Stress

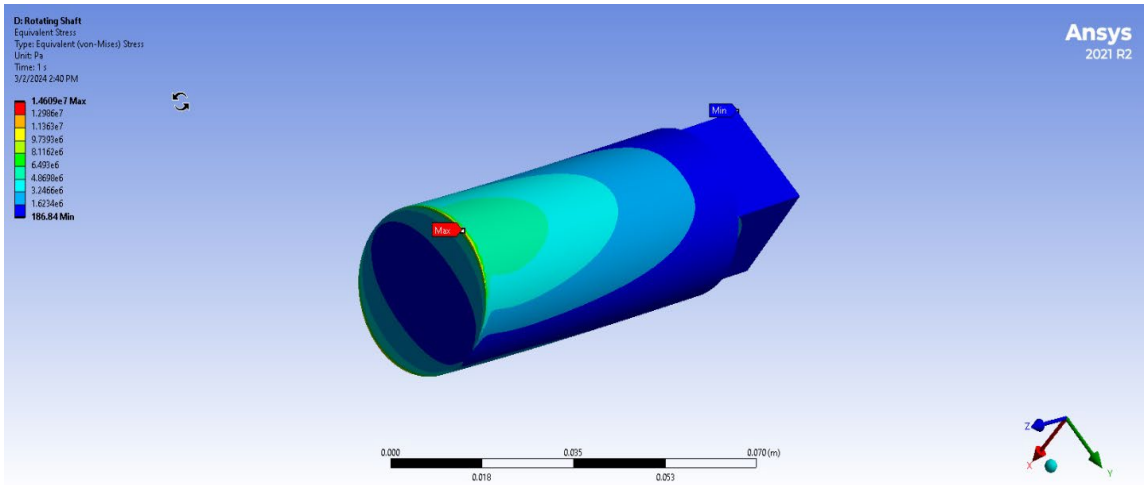


Figure 7.24: Equivalent (Von-Mises) Stress of Rotating Shaft

Table 7.7: Equivalent (Von-Mises) Stress of Rotating Shaft

| Equivalent (Von-Mises) Stress (MPa) | |
|---|---|
| Minimum | 0.000187 |
| Maximum | 14.609 |

### 7.3.2.3 Life

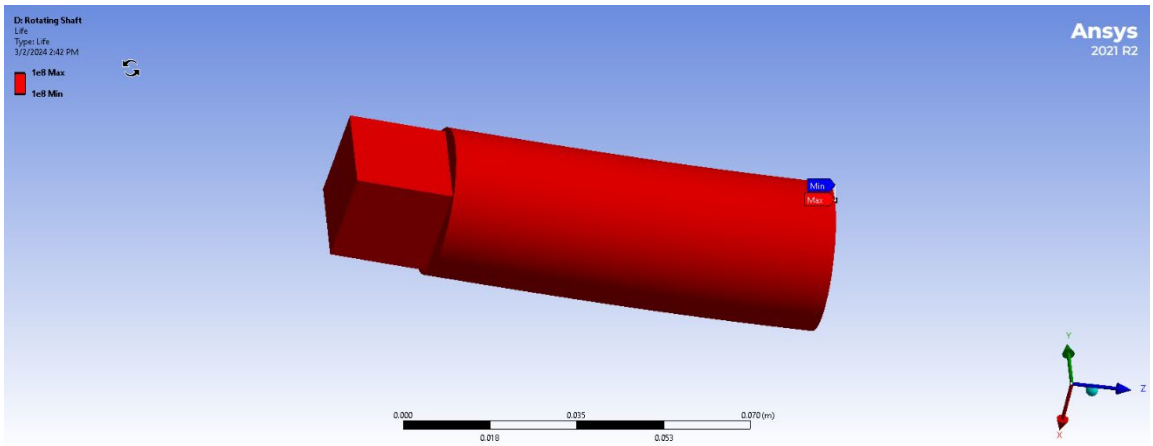


Figure 7.25: Life Cycle of Rotating Shaft

Table 7.8: Life Cycle of Rotating Shaft

| Total Cycle | |
|---|---|
| Minimum | $10^6$ |
| Maximum | $10^6$ |

### 7.3.2.4 Safety Factor

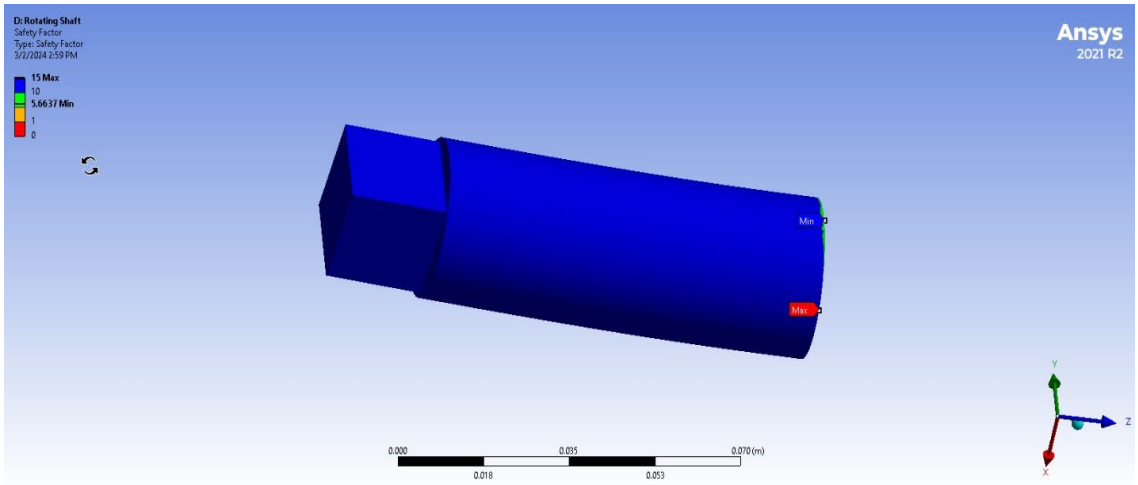


Figure 7.26: Safety Factor of Rotating Shaft

Table 7.9: Safety Factor of Rotating Shaft

| Safety Factor Value | |
|---|---|
| Minimum | 1.0537 |
| Maximum | 15 |

### 7.3.2.5 Equivalent Alternating Stress

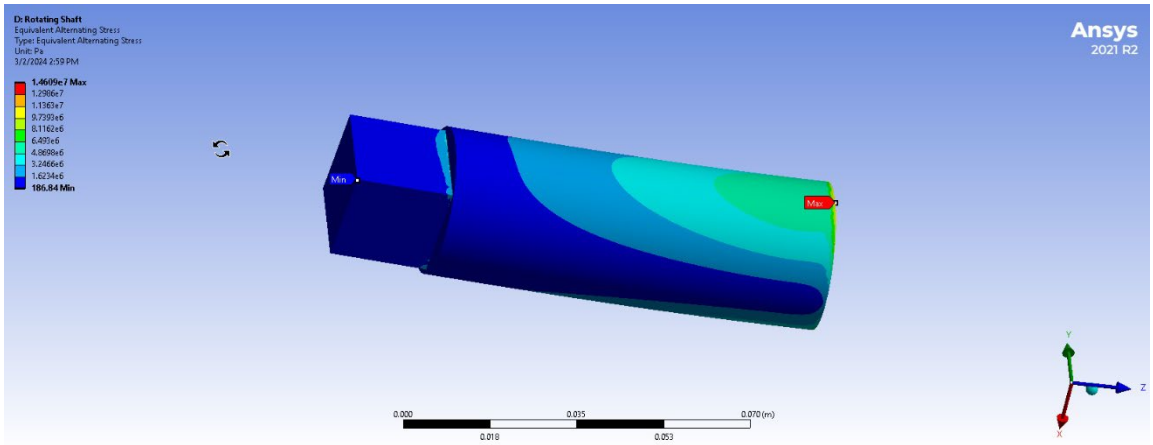


Figure 7.27: Equivalent Alternating Stress of Rotating Shaft

Table 7.10: Equivalent Alternating Stress of Rotating Shaft

| Equivalent Alternating Stress (MPa) | |
|---|---|
| Minimum | 0.0012767 |
| Maximum | 81.037 |

### 7.3.3 Static Structural Analysis of Circular Plate

#### 7.3.3.1 Total Deformation

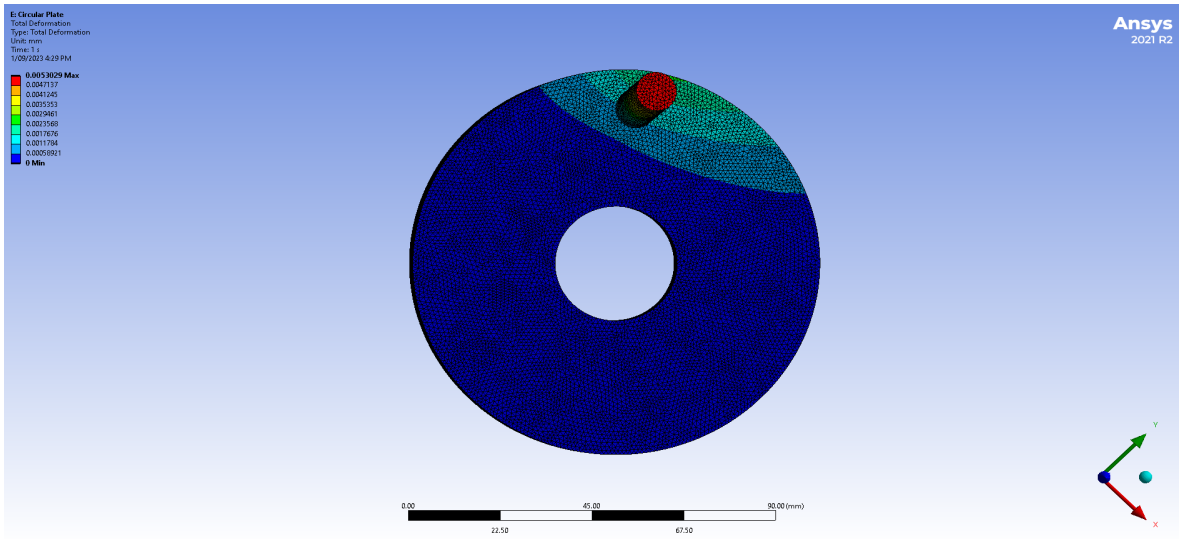


Figure 7.28: Total deformation of Circular Plate

Table 7.11: Total deformation of Circular Plate

| Total Deformation (mm) | |
|---|---|
| Minimum | 0 |
| Maximum | 0.0053029 |

#### 7.3.3.2 Equivalent (Von-Mises) Stress

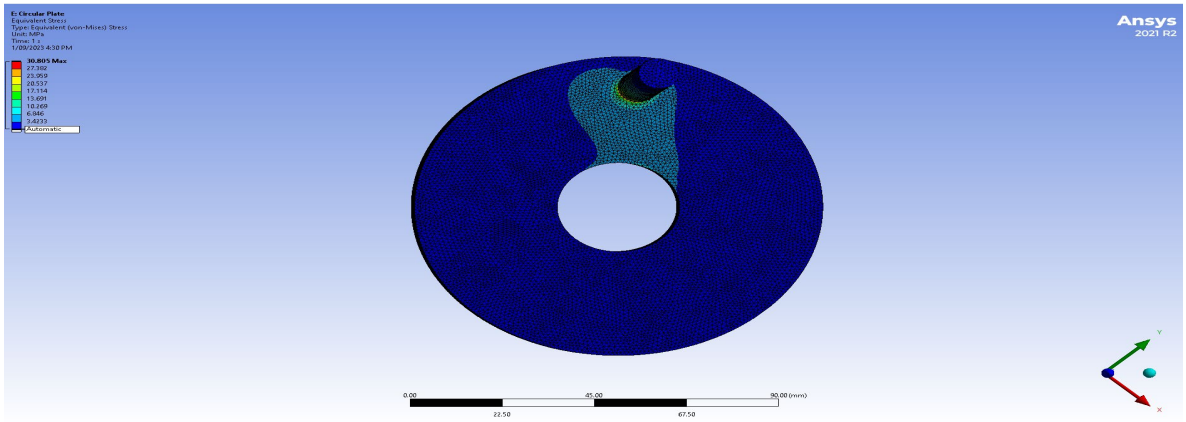


Figure 7.29: Equivalent (Von-Mises) Stress of Circular Plate

Table 7.12: Equivalent (Von-Mises) Stress of Circular Plate

| **Equivalent (Von-Mises) Stress (MPa)** | |
|---|---|
| Minimum | $6.2024\times 10^{-4}$ |
| Maximum | 30.805 |

### 7.3.3.3 Life

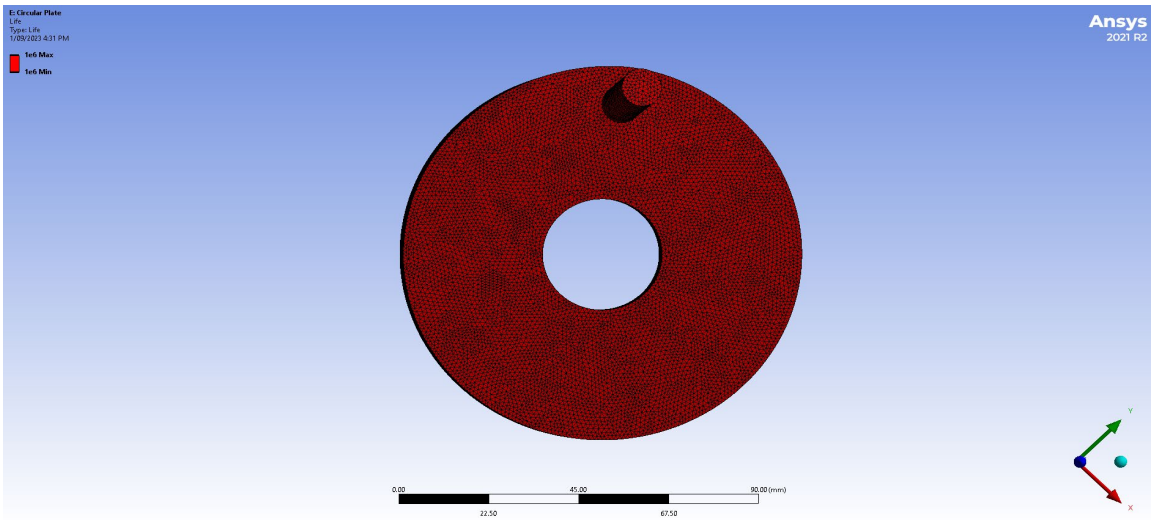


Figure 7.30: Life Cycle of Circular Plate

Table 7.13: Life Cycle of Circular Plate

| **Total Cycle** | |
|---|---|
| Minimum | $10^6$ |
| Maximum | $10^6$ |

### 7.3.3.4 Safety Factor

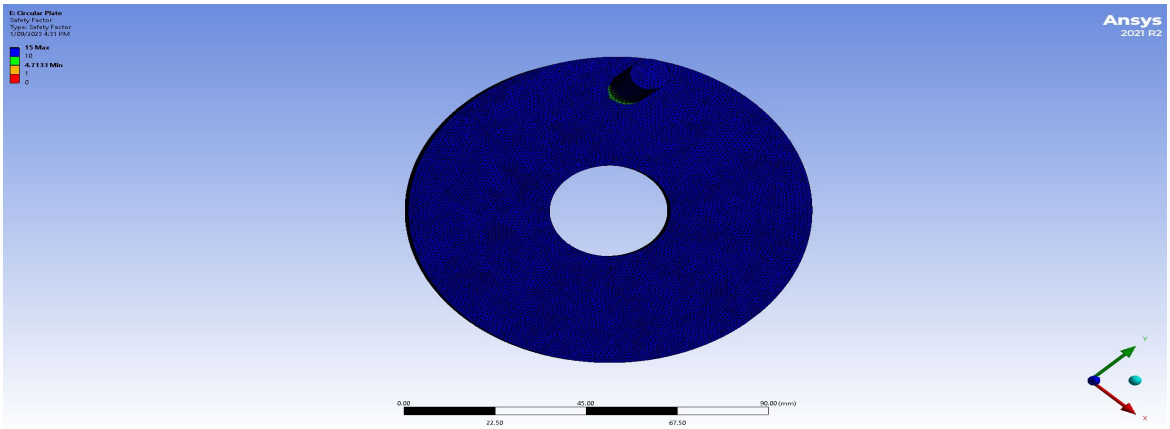


Figure 7.31: Safety Factor of Circular Plate

Table 7.14: Safety Factor of Circular Plate

| Safety Factor Value | |
|---|---|
| Minimum | 4.7133 |
| Maximum | 15 |

### 7.3.3.5 Equivalent Alternating Stress

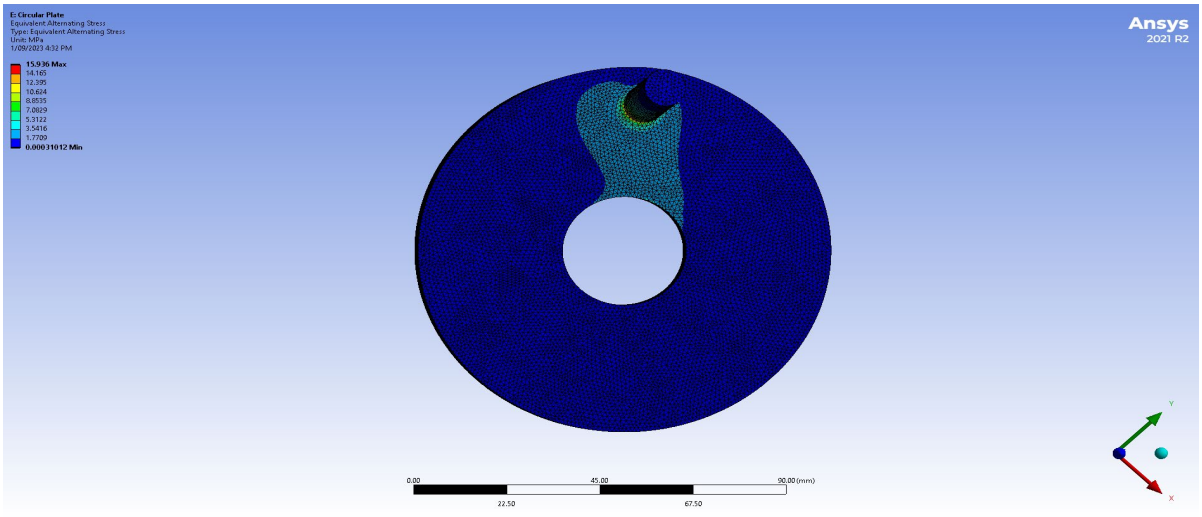


Figure 7.32: Equivalent Alternating Stress of Circular Plate

Table 7.15: Equivalent Alternating Stress of Circular Plate

| Equivalent Alternating Stress (MPa) | |
|---|---|
| Minimum | $3.1012\times 10^{-4}$ |
| Maximum | 15.936 |

## 7.3.4 Static Structural Analysis of Sliding Yoke & Reciprocating Shaft

### 7.3.4.1 Total Deformation

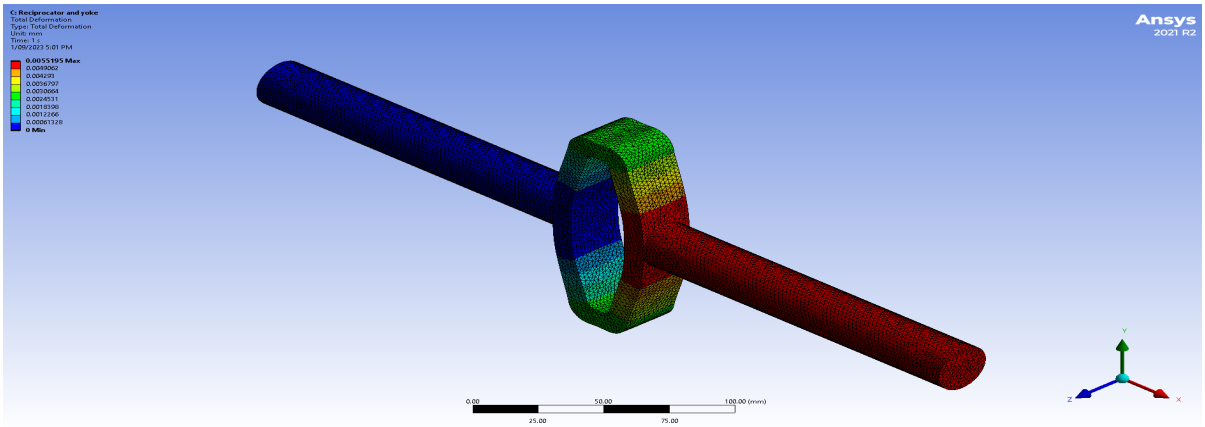


Figure 7.33: Total deformation of Sliding Yoke & Reciprocating Shaft

Table 7.16: Total deformation of Sliding Yoke & Reciprocating Shaft

| **Total Deformation (mm)** | |
|---|---|
| Minimum | 0 |
| Maximum | 0.0055195 |

### 7.3.4.2 Equivalent (Von-Mises) Stress

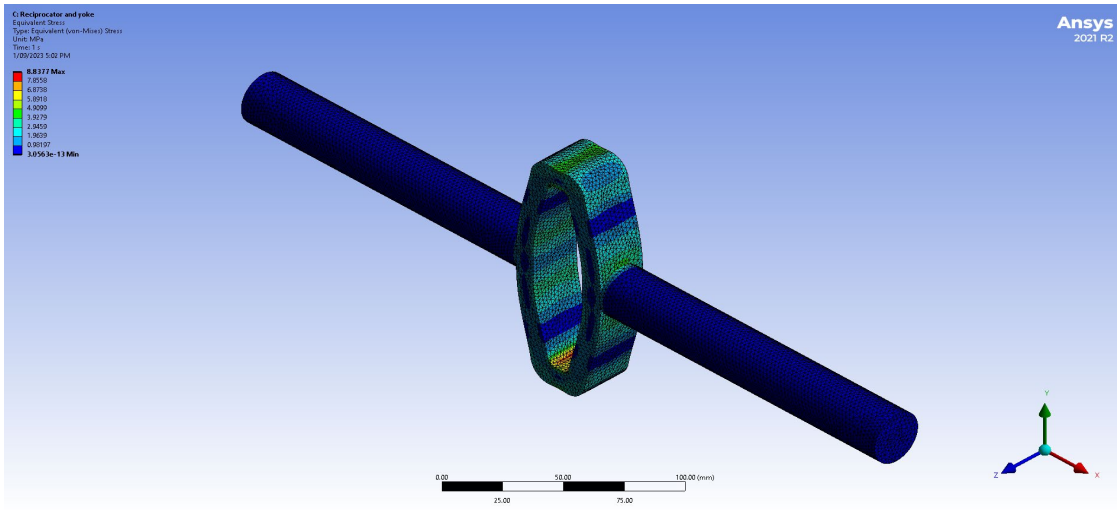


Figure 7.34: Equivalent (Von-Mises) Stress of Sliding Yoke & Reciprocating Shaft

Table 7.17: Equivalent (Von-Mises) Stress of Sliding Yoke & Reciprocating Shaft

| **Equivalent (Von-Mises) Stress (MPa)** | |
|---|---|
| Minimum | $3.0012\times 10^{-4}$ |
| Maximum | 8.8377 |

### 7.3.4.3 Life

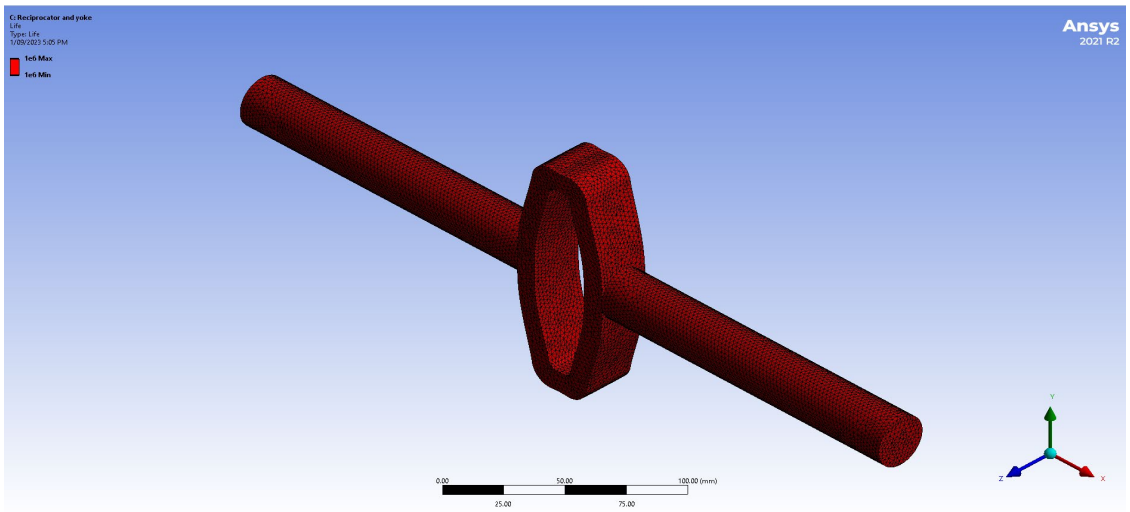


Figure 7.35: Life Cycle of Sliding Yoke & Reciprocating Shaft

Table 7.18: Life Cycle of Sliding Yoke & Reciprocating Shaft

| Total Cycle | |
|---|---|
| Minimum | $10^6$ |
| Maximum | $10^6$ |

### 7.3.4.4 Safety Factor

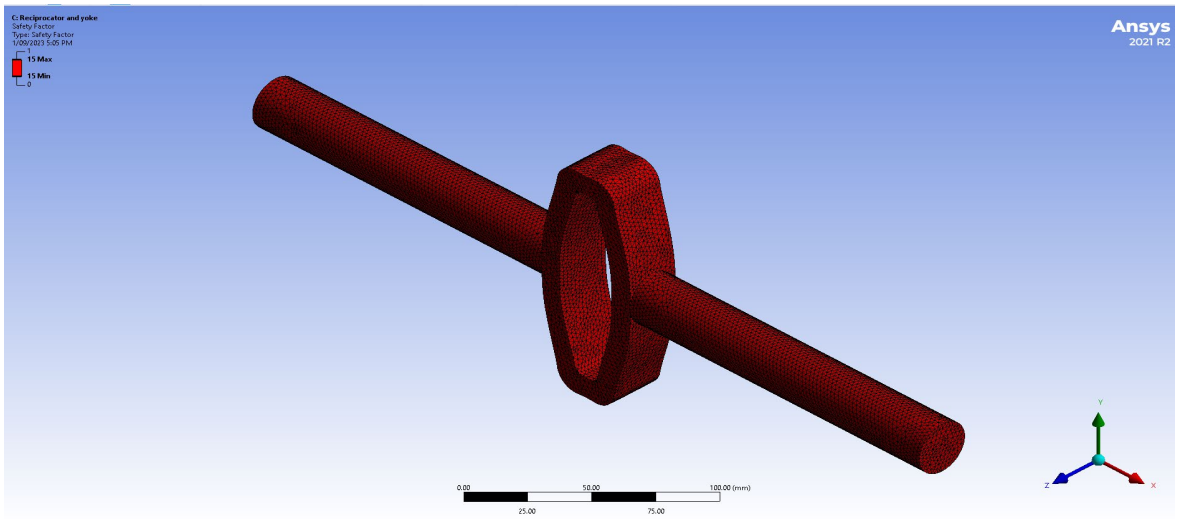


Figure 7.36: Safety Factor of Sliding Yoke & Reciprocating Shaft

Table 7.19: Safety Factor of Sliding Yoke & Reciprocating Shaft

| Safety Factor Value | |
|---|---|
| Minimum | 15 |
| Maximum | 15 |

### 7.3.4.5 Equivalent Alternating Stress

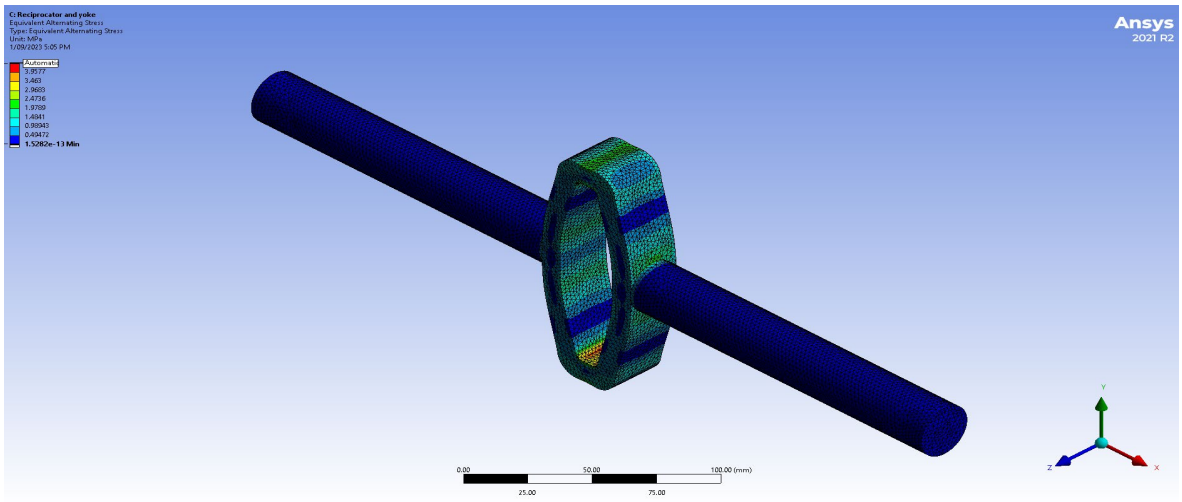


Figure 7.37: Equivalent Alternating Stress of Sliding Yoke & Reciprocating Shaft

Table 7.20: Equivalent Alternating Stress of Sliding Yoke & Reciprocating Shaft

| **Equivalent Alternating Stress (MPa)** | |
|---|---|
| Minimum | $1.5282\times 10^{-13}$ |
| Maximum | 4.4524 |

### 7.3.5 Static Structural Analysis of Plunger

#### 7.3.5.1 Total Deformation

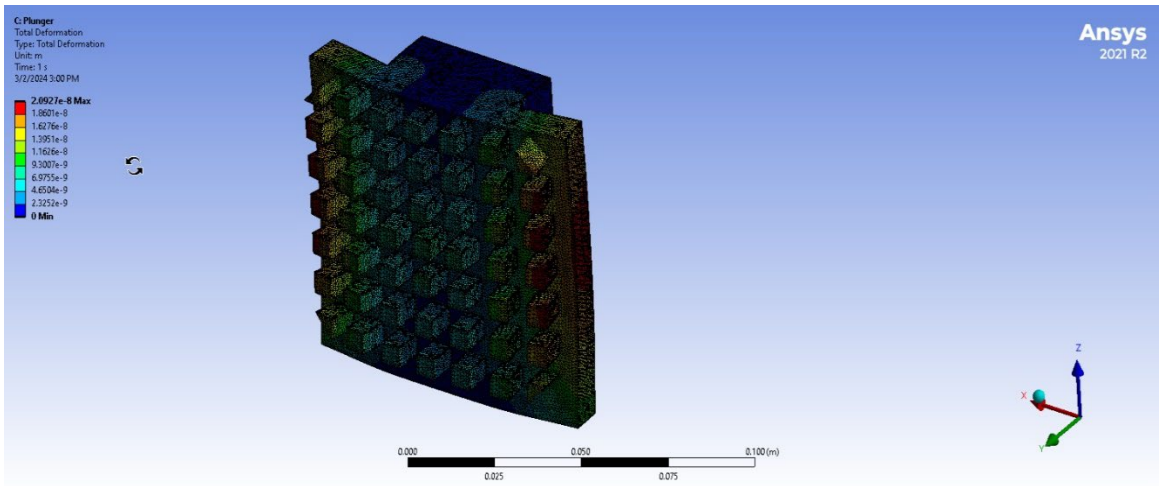


Figure 7.38: Total deformation of Plunger

Table 7.21: Total deformation of Plunger

| **Total Deformation (mm)** | |
|---|---|
| Minimum | 0 |
| Maximum | 0.0002092 |

#### 7.3.5.2 Equivalent (Von-Mises) Stress

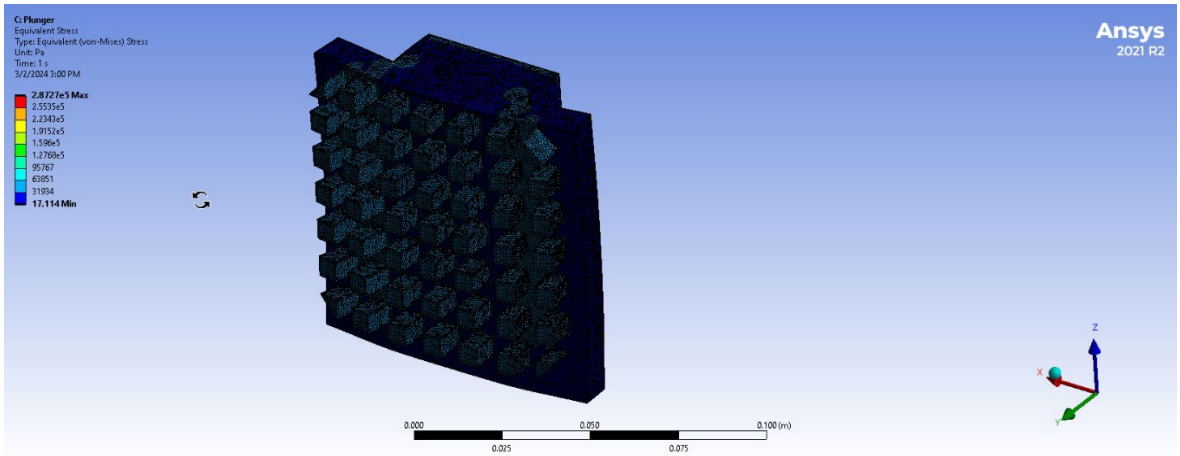


Figure 7.39: Equivalent (Von-Mises) Stress of Plunger

Table 7.22: Equivalent (Von-Mises) Stress of Plunger

| **Equivalent (Von-Mises) Stress (MPa)** | |
|---|---|
| Minimum | 0.0000174 |
| Maximum | 0.287 |

### 7.3.5.3 Life

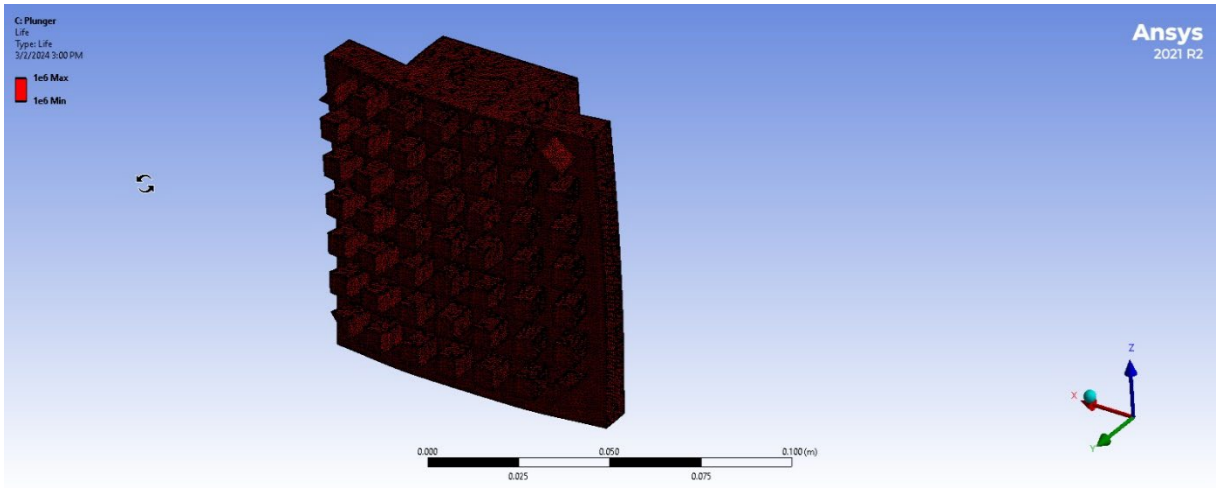


Figure 7.40: Life Cycle of Plunger

Table 7.23: Life Cycle of Plunger

| **Total Cycle** | |
|---|---|
| Minimum | $10^6$ |
| Maximum | $10^6$ |

### 7.3.5.4 Safety Factor

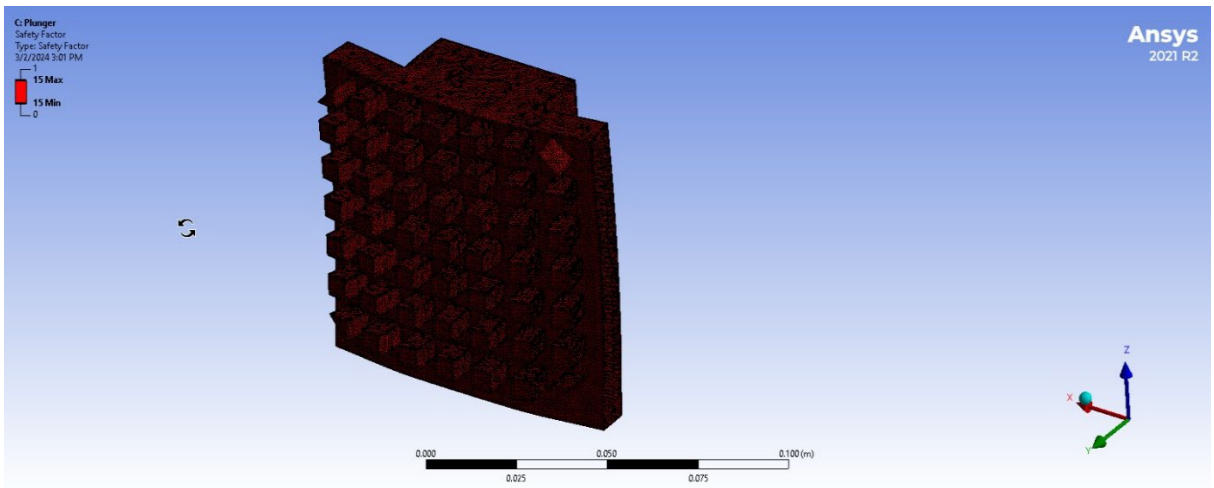


Figure 7.41: Safety Factor of Plunger

Table 7.24: Safety Factor of Plunger

| Safety Factor Value | |
|---|---|
| Minimum | 15 |
| Maximum | 15 |

### 7.3.5.5 Equivalent Alternating Stress

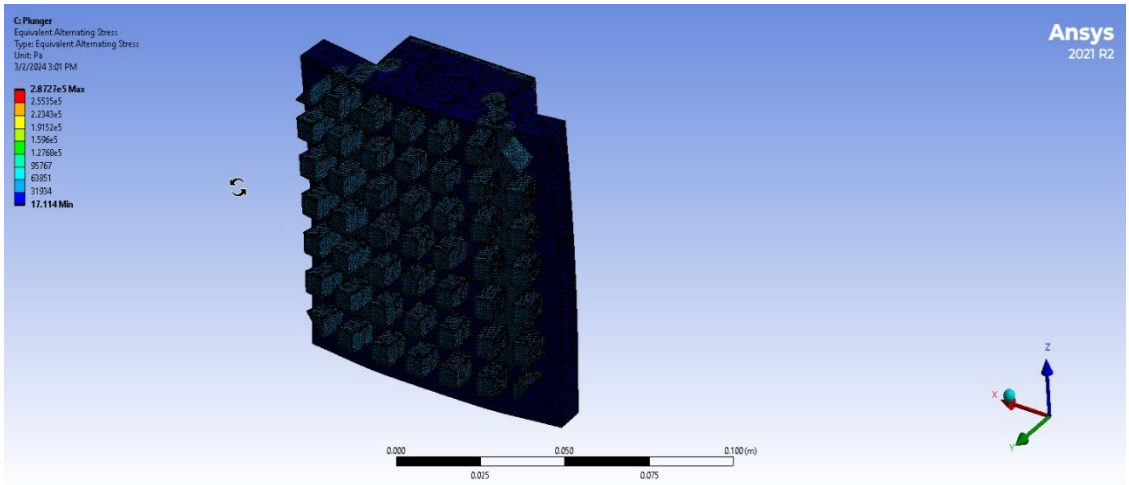


Figure 7.42: Equivalent Alternating Stress of Plunger

Table 7.25: Equivalent Alternating Stress of Plunger

| Equivalent Alternating Stress (MPa) | |
|---|---|
| Minimum | 0.0000174 |
| Maximum | 0.287 |

### 7.3.6 Static Structural Analysis of Blade

### 7.3.6.1 Total Deformation

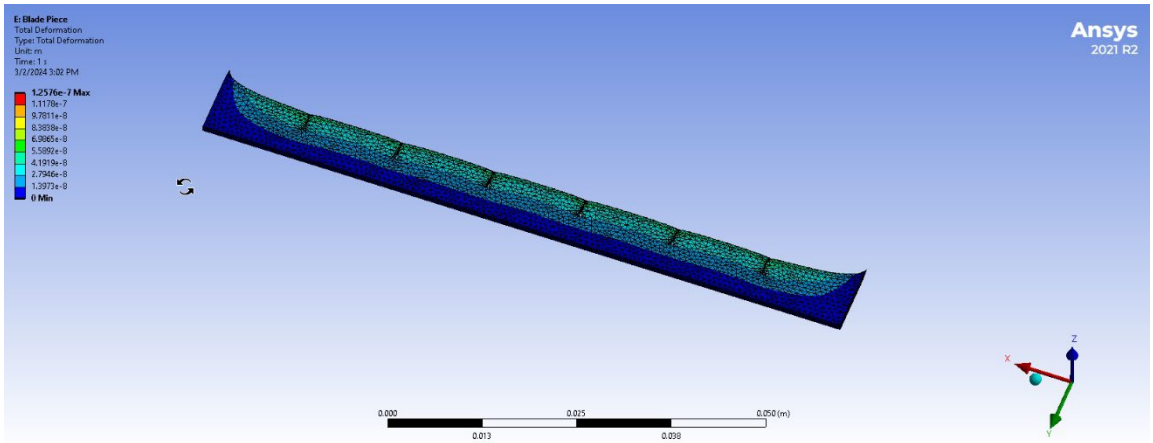


Figure 7.43: Total deformation of Blade

Table 7.26: Total deformation of Blade

| Total Deformation (mm) | |
|---|---|
| Minimum | 0 |
| Maximum | 0.0001257 |

### 7.3.6.2 Equivalent (Von-Mises) Stress

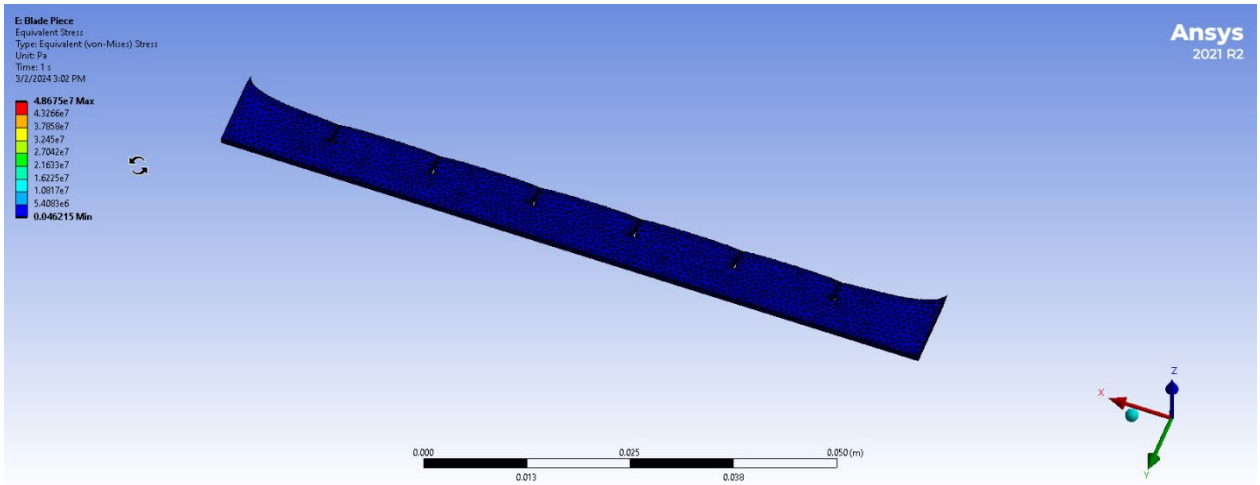


Figure 7.44: Equivalent (Von-Mises) Stress of Blade

Table 7.27: Equivalent (Von-Mises) Stress of Blade

| Equivalent (Von-Mises) Stress (MPa) | |
|---|---|
| Minimum | $4.6215 \times 10^{-8}$ |
| Maximum | 48.67 |

### 7.3.6.3 Life

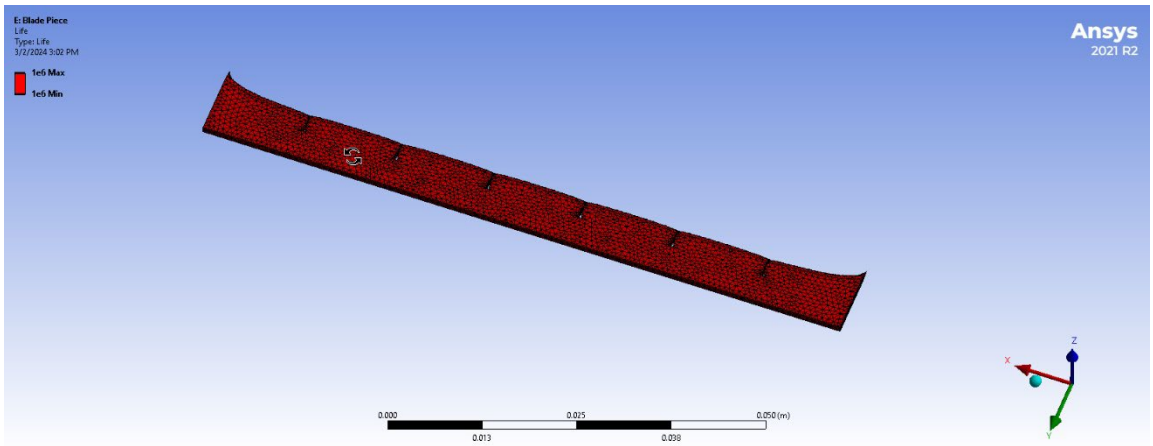


Figure 7.45: Life Cycle of Blade

Table 7.28: Life Cycle of Blade

| Total Cycle | |
|---|---|
| Minimum | $10^6$ |
| Maximum | $10^6$ |

### 7.3.6.4 Safety Factor

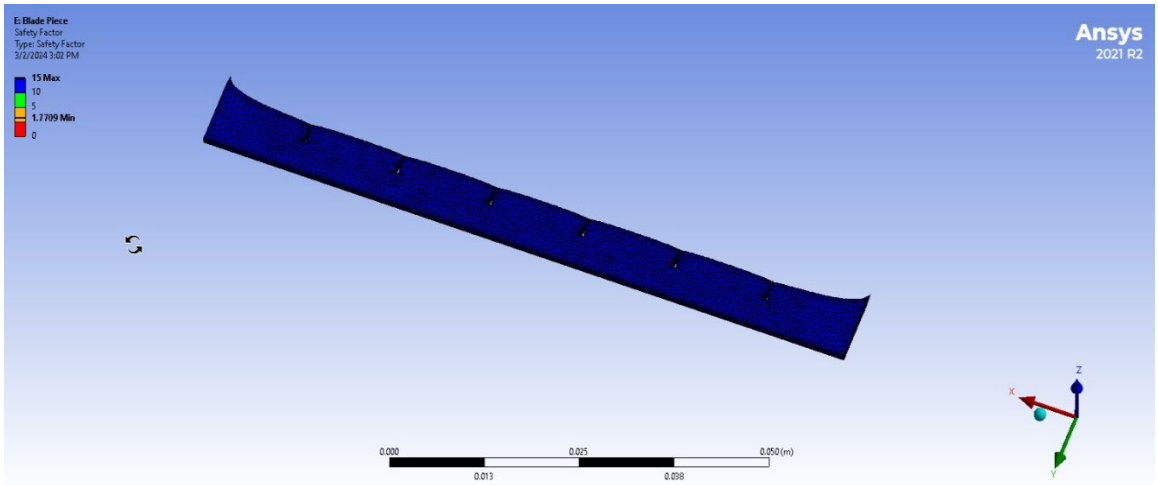


Figure 7.46: Safety Factor of Blade

Table 7.29: Safety Factor of Blade

| Safety Factor Value | |
|---|---|
| Minimum | 1.7709 |
| Maximum | 15 |

### 7.3.6.5 Equivalent Alternating Stress

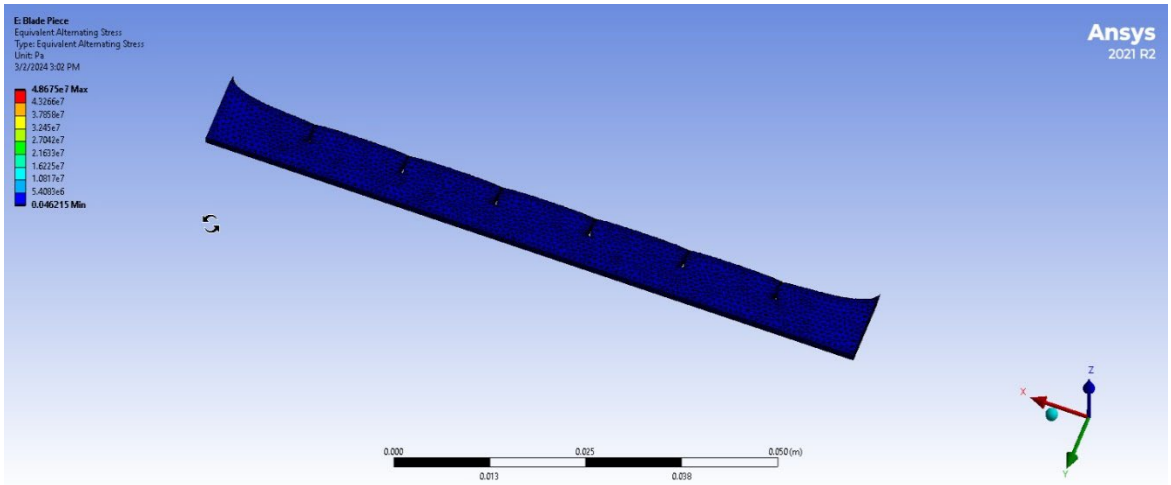


Figure 7.47: Equivalent Alternating Stress of Blade

Table 7.30: Equivalent Alternating Stress of Blade

| Equivalent Alternating Stress (MPa) | |
|---|---|
| Minimum | $4.6215 \times 10^{-8}$ |
| Maximum | 48.67 |

### 7.3.7 Static Structural Analysis of Cutting Zone

#### 7.3.7.1 Total Deformation

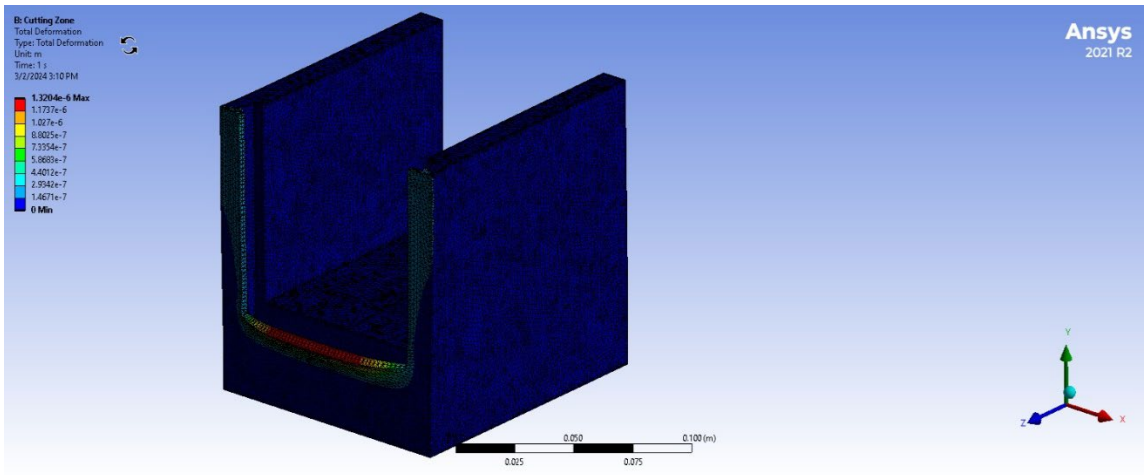


Figure 7.48: Total deformation of Cutting Zone

Table 7.31: Total deformation of Cutting Zone

| Total Deformation (mm) | |
|---|---|
| Minimum | 0 |
| Maximum | 0.00132 |

#### 7.3.7.2 Equivalent (Von-Mises) Stress

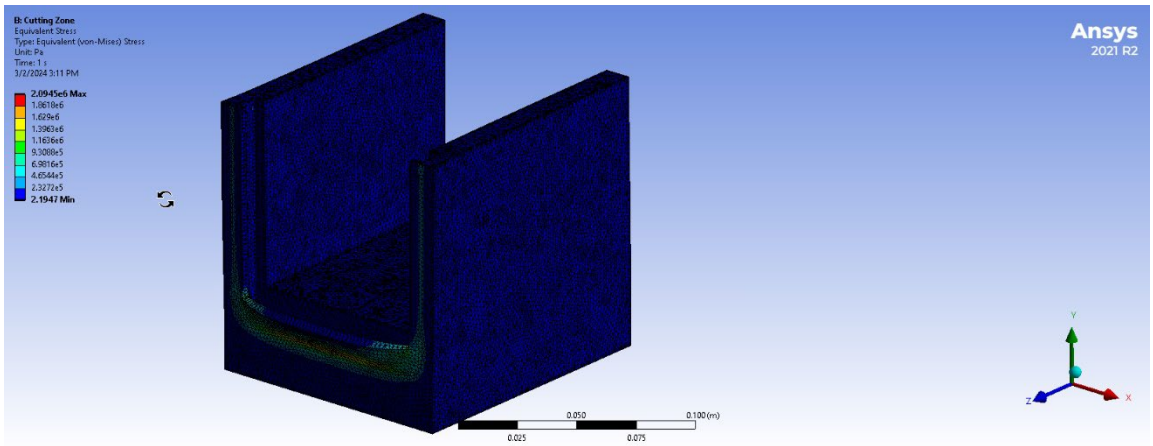


Figure 7.49: Equivalent (Von-Mises) Stress of Cutting Zone

Table 7.32: Equivalent (Von-Mises) Stress of Cutting Zone

| **Equivalent (Von-Mises) Stress (MPa)** | |
|---|---|
| Minimum | $2.1947 \times 10^{-6}$ |
| Maximum | 2.0945 |

### 7.3.7.3 Life

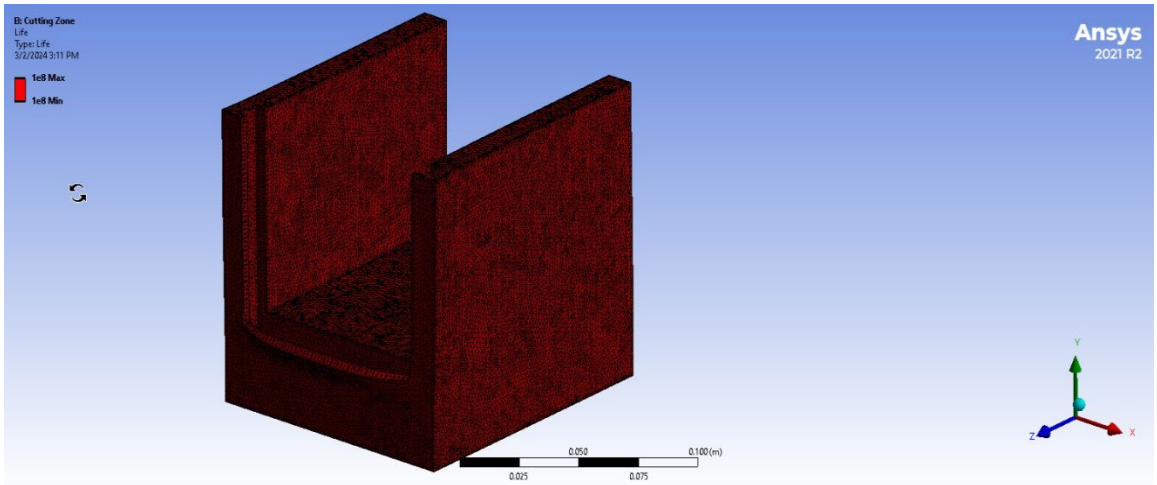


Figure 7.50: Life Cycle of Cutting Zone

Table 7.33: Life Cycle of Cutting Zone

| **Total Cycle** | |
|---|---|
| Minimum | $10^6$ |
| Maximum | $10^6$ |

### 7.3.7.4 Safety Factor

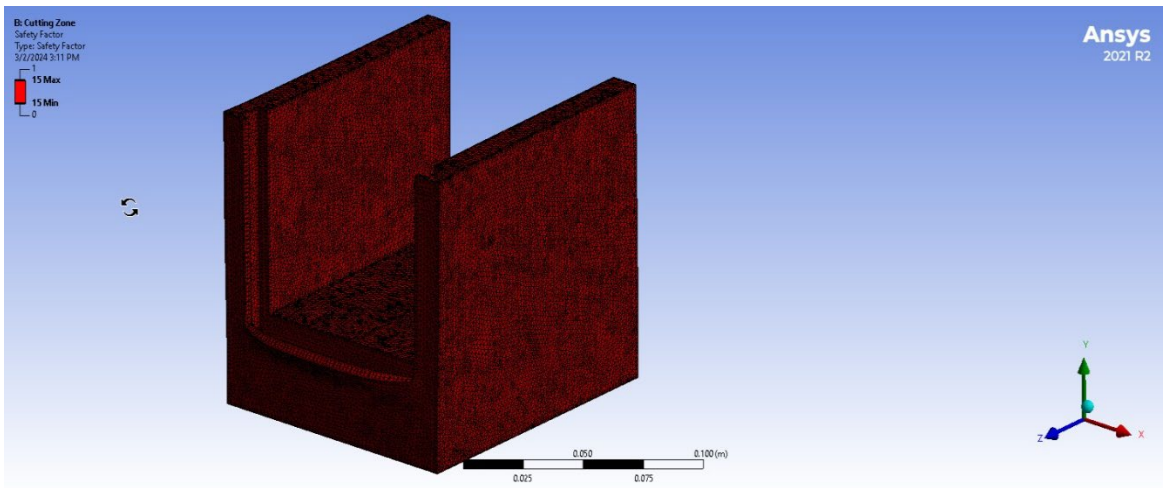


Figure 7.51: Safety Factor of Cutting Zone

Table 7.34: Safety Factor of Cutting Zone

| Safety Factor Value | |
|---|---|
| Minimum | 15 |
| Maximum | 15 |

### 7.3.7.5 Equivalent Alternating Stress

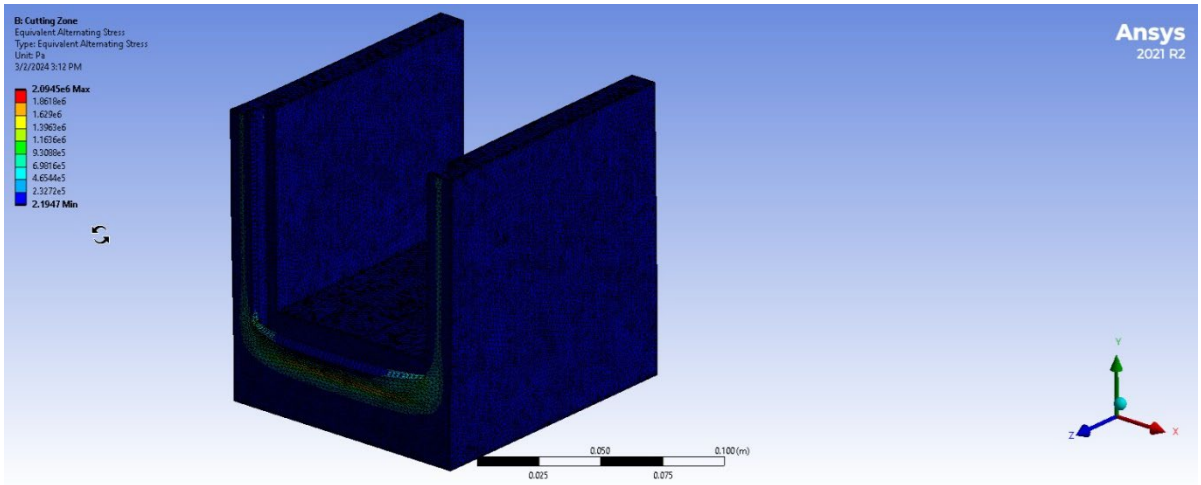


Figure 7.52: Equivalent Alternating Stress of Cutting Zone

Table 7.35: Equivalent Alternating Stress of Cutting Zone

| Equivalent Alternating Stress (MPa) | |
|---|---|
| Minimum | $2.1947\times 10^{-6}$ |
| Maximum | 2.0946 |

## 7.4 Conclusion

We know that for the safe usage of any product or structure, the safety factor must be greater than 1. Also, for a product/structure to have infinite life the life cycle must be greater than $10^6$. All the parts of our product satisfied these criteria. We also calculated the Von-Misses Stress and Maximum Deflection for different loading conditions.

So, we can without a shadow of a doubt claim that our product is safe to use for our consumers.

# Chapter- 08

# Cost & Sensitivity Analysis

Cost and sensitivity analysis are crucial for a product's success. Cost analysis helps estimate the expenses involved in production, from materials to manufacturing processes, ensuring that the product remains economically viable. It guides pricing decisions, preventing underpricing that could lead to losses or overpricing that could deter customers.

Sensitivity analysis assesses how changes in variables affect outcomes. For our innovative vegetable cutter, sensitivity analysis aids in understanding how shifts in material costs, manufacturing expenses, or pricing could impact profitability. This knowledge empowers proactive decision-making, risk mitigation, and informed strategic adjustments. Both analyses provide a holistic view of the product's financial landscape, helping one optimize costs, set competitive prices, and navigate potential challenges.

## 8.1 Demand Forecast

Forecasted Number of Products per Year: 6000 units

## 8.2 Manufacturing Cost

Manufacturing cost is the sum of direct material, direct labor, and manufacturing overhead expenses incurred to produce goods, representing the total expenses associated with the production process.

Numbers of Quantity expected to sale per year is 6000 units.

### 8.2.1 Machine cost

1.Casting setup (Supply by Local Agent)

Buying cost: 20,000 Tk.

Effective working life: 5 years

Quantity: 2

Total cost: 40,000Tk.

2. MacPower Industries Horizontal Turbo Universal Milling Machine (MAC-2)

Buying Cost: 300,000Tk.

Effective working life: 10 years

Quantity: 1

3. Non-precision Grinding Machine

Buying Cost: 350,000Tk.

Effective working Life: 10 years

Quantity: 1

4. Polishing and Coloring Equipment

Buying Cost (Yearly): 100,000Tk.

5. PVC Pet PP PE Extruder (Dongguan Chencheng Machinery CC120 Integral Type Non-Automatic Extruder)

Buying cost: 800,000 Tk.

Effective working life: 25 years

Quantity: 1

6. Welding Machine MIG 200GW RILAND

Buying cost: 50,000 Tk.

Effective working life: 15 years

Quantity: 1

7. Arc Welding Machine (Three Phase YD-400AT3DJR Panasonic GBT Inverter DC Arc Welding System)

Buying cost: 70,000 Tk.

Effective working life: 10 years

Quantity: 1

**Total Cost of Machineries: 1,710,000**

**8.2.2 Cost of Raw Material (Per unit of product)**

1. Mild steel (MS Plate or Sheets /Is2062 E250 Grade A/B/C/Cu)

Market price: 80/kg

Required quantity: 5kg

Total Cost per Product: 400 tk

2. SS (Stainless Steel Polish 304 SS Plate)

Market price: 250 /kg

Required quantity - 8kg

Total Cost per Product: 2000tk

3. Stainless Steel Rods (Material Grade: SS 316)

Market price: 300 Tk. / kg

Required quantity: 2 kg

Total Cost per Product: 600tk

**Total Raw Material cost per unit = 3,000 Tk.**

Demand per year (forecasted) = 6,000

**Total Raw Material Cost = 18,000,000Tk.**

**8.2.3 Labor Cost**

1. Name of job: Milling machine operator

Number of workers: 1

Wage rate: 14,000 Tk. /Month

Total labor cost: 14,000 Tk.

2. Name of job: Casting operator

Number of workers: 2

Wage rate: 12,000 Tk.  /Month

Total labor cost: 24,000 Tk.

3. Name of job: Color operator

Number of workers: 1

Wage rate: 11,000 Tk. /Month

Total labor cost: 11,000 Tk.

4. Name of job: Extrusion process operator

Number of workers: 1

Wage rate: 12,000 Tk. /Month

Total labor cost: 12,000 Tk.

5. Name of job: Grinding machine operator

Number of workers: 1

Wage rate: 10,000 Tk. /Month

Total labor cost: 10,000 Tk.

6. Name of job: MIG welding operator

Number of workers: 2

Wage rate: 12,000 Tk. /Month

Total labor cost: 24,000 Tk.

7. Name of job: Arc welding operator

Number of workers: 2

Wage rate: 12,000 Tk. /Month

Total labor cost: 24,000 Tk.

8. Name of job: Floor Cleaner

Number of workers: 1

Wage rate: 8,000 Tk. /Month

Total labor cost: 8,000 Tk.

9. Name of job: Security Guard

Number of workers: 1

Wage rate: 8,000 Tk. /Month

Total labor cost: 8,000 Tk.

**Total Labor Cost per Month: 135,000 Tk.**

**Total Labor Cost per Year: 1,620,000 Tk.**

### 8.2.4 Purchasing Cost per Unit of Product

Table 8.1: Purchased parts and their cost (per unit of product)

| Component | Quantity | Market Price (BDT) | Total Cost (BDT) |
|---|---|---|---|
| Bearing | 1 | 100 each | 100 |
| Handle | 1 | 200 each | 200 |
| Blade | 2 | 200 each | 400 |
| Nut-Bolt | 20 | 15 each | 300 |
| **Total Purchasing Cost (Per unit of Product)** | | | **1000** |

**Total purchasing cost of outsourced parts per year: 6,000,000Tk.**

### 8.2.5 Manufacturing Overhead Cost

Table 8.2: Manufacturing Overhead Costs

| Cost Item | No. of Post | Salary/person (BDT) | Total cost (BDT) |
|---|---|---|---|
| Production Manager | 1 | 45,000 | 45,000 |
| Manufacturing & Assembly Engineer | 1 | 35,000 | 35,000 |
| Design Engineer | 1 | 40,000 | 40,000 |
| Quality Control Manager | 1 | 40,000 | 40,000 |
| Power Consumption | | | 20,000 |
| Factory Rent | | | 40,000 |
| **Total** | | | **220,000** |

Total Manufacturing Overhead Cost per Month: 220,000Tk.

**Total Manufacturing Overhead Cost per Year: 2,640,000Tk.**

### 8.2.6 Total Manufacturing Cost (Per Year)

Table 8.3: Total Manufacturing Cost (per year)

| Criteria | Cost |
|---|---|
| Cost of Purchasing | 6,000,000 |
| Cost of Raw Material | 18,000,000 |
| Cost of labor | 1,620,000 |
| Manufacturing Overhead Cost | 2,640,000 |
| **Total** | **28,260,000** |

## 8.3 Non-Manufacturing Cost

Non-manufacturing costs, also known as operating expenses or overhead costs, encompass expenditures that aren't directly tied to the production of goods but are essential for running a business. These costs include administrative expenses, sales and marketing expenses, research and development costs, rent, utilities, salaries of non-production employees, and other general operating costs. Non-manufacturing costs are vital for the overall functioning of a company, supporting activities beyond production. Proper management of these costs is essential for maintaining efficiency, profitability, and the overall financial health of the business.

### 8.3.1 Administrative Cost

Table 8.4: Administrative Cost

| Post | No. of post | Salary/person (BDT) | Total Cost (BDT) |
|---|---|---|---|
| CEO | 1 | 60,000 | 60,000 |
| Accountant | 1 | 25,000 | 25,000 |
| Clark | 1 | 12,000 | 12,000 |
| HR Manager | 1 | 30,000 | 30,000 |
| Secretary | 1 | 20,000 | 20,000 |
| **Total** | | | **147,000** |

**Yearly Administrative Cost per Year: 1 47,000×12 = 1,764,000 Tk.**

### 8.3.2 Sales and Marketing Expense

Table 8.5: Selling & Marketing Expenses (per month)

| Cost Item | No. of post | Salary/person (BDT) | Total Cost (BDT) |
|---|---|---|---|
| Marketing Executive | 2 | 16,000 | 32,000 |
| Advertisement | | | 25,000 |
| Total | | | 57,000 |

**Total Sales and Marketing Expense per Year=684,000Tk**

### 8.4 Bank Loan & Interest

Total bank loan= 5,000,000

Repayment periods, n = 25 years

Interest Rate, i =10%

Amount to be paid to the bank annually, A = P(A/P,10,25) = 550,840 TK.

Table 8.6 Total Non-Manufacturing Cost (per year)

| Fixed Cost | Cost (BDT) |
|---|---|
| Administration | 1,764,000 |
| Bank Loan | 550,840 |
| Sales & Marketing | 684,000 |
| Insurance | 40,000 |
| Taxes | 50,000 |
| Advancement for factory | 400,000 |
| **Total** | **3,488,840** |

## 8.5 Total Cost

Table 8.7 Total Cost per Year

| Criteria | Cost (BDT) |
|---|---|
| Manufacturing | 28,260,000 |
| Non-Manufacturing | 3,488,840 |
| **Total** | **31,748,840** |

## 8.6 Break Even Analysis

For the first year,

**Fixed Cost:**

Bank payment: 550,840 TK.

Machine Cost: 1,710,000 TK.

Factory Insurance: 40,000 TK.

Manufacturing Overhead: 2,640,000 TK.

Selling and Administrative Costs: 2,448,000 TK.

**Total amount of fixed costs: 7,388,840 TK.**

**Variable Cost:**

Total raw material cost: 18,000,000 TK.

Total purchase cost of outsourced parts: 6,000,000 TK.

Total labor cost: 1,620,000 TK.

**Total variable cost: 25,620,000 TK.**

**Variable cost per unit: 25,620,000 ÷ 6000 = 4270 TK.**

**Selling Price: 4270 + 40.5% of 4270 ≈ 6000 TK.**

At break-even: Selling price × break even unit ($Q_{BEP}$) = Fixed cost + Variable cost

Or, $6000(Q_{BEP}) = 7388840 + 4270(Q_{BEP})$

Or, $Q_{BEP} \approx 4271$ units

So, the break-even quantity ($Q_{BEP}$) for the first year is 4271 units.

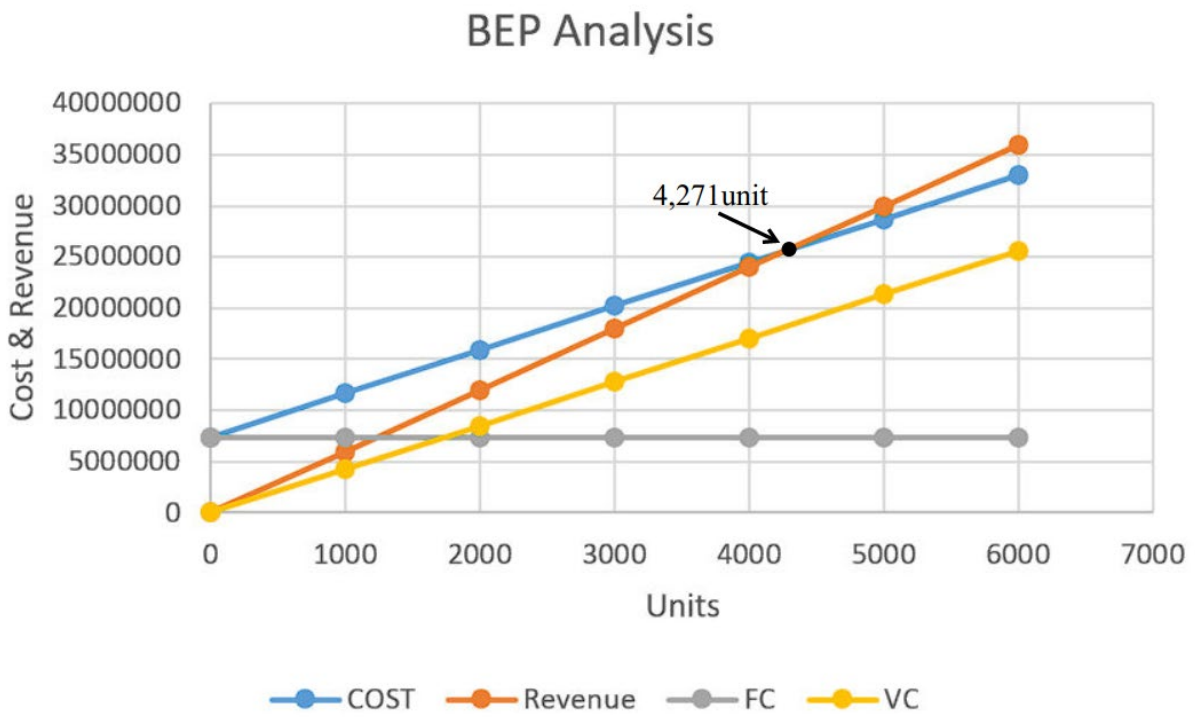


Figure 8.1: Break-even Point Analysis

**8.7 Sensitivity Analysis**

Sensitivity analysis gives an insight about how sensitive the break-even point is with respect to a particular cost or revenue parameter. In this sensitivity analysis, a change of 10% is made for each cost parameter separately and then break-even point is computed. This analysis will provide the list of sensitive parameters.

**8.7.1 Sensitivity of Machine**

Total cost of Machine = 1,710,000 TK.

After 10% increase, total cost of Machine = 1,710,000+1,710,000*0.1 = 1,881,000 TK.

New Fixed Cost = 7,559,840 TK.

At Break Even Point,

Selling price × $Q_{BEP}$ = Total Fixed cost+ Variable cost × $Q_{BEP}$

Or, 6000× $Q_{BEP}$ = 7,559,840 + (4270 × $Q_{BEP}$)

Or, $Q_{BEP}$ = 4369 units.

$\Delta Q_{BEP}$ = (4369-4271)/ 4271*100% = 2.29%

**8.7.2 Sensitivity of Direct Material**

Total cost of direct material = 18,000,000 TK.

After 10% increase, total cost of direct material = 18,000,000+18,000,000*0.1 = 19,800,000 TK.

Total variable cost will be = 27,420,000 TK.

Variable cost per unit = 27420000/6000 = 4570 TK.

At Break Even Point: Selling price × $Q_{BEP}$ = Total Fixed cost+ Variable cost × $Q_{BEP}$

Or, 6000× $Q_{BEP}$ = 7,388,840 + (4570 × $Q_{BEP}$)

Or, $Q_{BEP}$ = 5167 units

$\Delta Q_{BEP}$ = (5167– 4271)/ 4271*100% = 20.97%

So, the breakeven is too much sensitive to direct material cost.

**8.7.3 Sensitivity of Direct Labor**

Total cost of labor per Year = 1,620,000 TK.

After 10% increase, total cost of labor = 1,620,000 *1.10 = 1782000 TK.

Total Variable cost will be = 25782000 TK.

Variable cost per unit = 23838000/6000 = 4297 TK.

At Break Even Point: Selling price × $Q_{BEP}$ = Total Fixed cost+ Variable cost × $Q_{BEP}$

Or, 6000× $Q_{BEP}$ = 7,388,840 + (4297 × $Q_{BEP}$)

Or, $Q_{BEP}$ = 4338

$\Delta Q_{BEP}$ = (4338– 4271)/4271*100% = 1.56 %

So, the direct material is sensitive to the breakeven point. The cost of direct material can increase the breakeven point.

### 8.7.4 Sensitivity of Selling & Administrative Cost

Total Selling & Administrative cost = 2,448,000 TK.

After 10% increase, total Selling & Administrative cost = 2448000*1.10 = 2692800 TK.

Total fixed cost will be = 2692800 + 4950840 TK. = 7633640 TK.

At Break Even Point: Selling price × $Q_{BEP}$ = Total Fixed cost+ Variable cost × $Q_{BEP}$

Or, 6000× $Q_{BEP}$ = 7633640+ 4270 × $Q_{BEP}$)

Or, $Q_{BEP}$ = 4412 units.

$\Delta Q_{BEP}$ = (4412– 4271)/4271*100% = 3.30%

To summarize, we can see that if we increase 10%, the sensitivity of
Machine: 2.29%
Direct Material: 20.97%

Direct Labor: 1.56%

Selling & Administrative: 3.30%

### 8.8 Conclusion

Product design is a general term that encompasses the process of systematically creating and transforming ideas into new commodities. As a result, it is an essential component of new product development. Product design can be as basic as fixing a flaw or as complex as creating an entirely novel idea with the ability to develop over time. Our "Dual Sided Vegetable Cutter" is an efficient product that serves to fulfill the remaining gap in the market for an affordable option. Because there is no local manufacturer of this category of the product in the price bracket, it will entice buyers to purchase it. It will save money because a single product may operate twice as fast and with versatility. Studying product design gives us broad theoretical knowledge and the practical skillset that we need to create new products.

# APPENDIX

**Appendix A: Questionnaire for Survey**

Name:

Age:

Gender:

Address:

Date

1. How frequently do you cook at home or at your workplace?
    - Hardly
    - Occasionally
    - Several times a week
    - Regularly
2. How comfortable are you using traditional kitchen tools and appliances?
    - Not comfortable at all
    - Moderately comfortable
    - Very comfortable
3. How much mess does your traditional cutter usually make?
    - Few
    - Moderate
    - High

4. On a scale of 1 to 5, how satisfied are you with your current vegetable cutting method in terms of efficiency and ease of use?
    - 1 (Not satisfied at all)
    - 2(Slightly Dissatisfied)
    - 3(Indifferent)
    - 4(Moderately Satisfied)
    - 5(Very satisfied)
5. High Do you use any Modern Kitchen Tool?
    - Yes
    - No
6. Do you use any Vegetable Cutter?
    - Yes
    - No
7. If yes, what features or qualities are most important to you when choosing a vegetable cutter? (Multiple choice)
    - Cutting performance
    - Durability
    - Ease of use
    - Safety feature
    - Portability
    - Ease of cleaning

8. How often do you use a vegetable cutter in your cooking?
    - Rarely
    - Occasionally
    - Several times a week
    - Almost daily
9. If no, why don't you prefer using a vegetable cutter? (Multiple choice)
    - Not durable
    - Not budget friendly
    - Not easy to use
    - Not versatile enough
    - Not compact
10. Have you ever heard of/used a dual sided vegetable cutter before?
    - Yes
    - No
11. How likely are you to consider purchasing a new vegetable cutter? For reference, you can check our product for which a conceptual video for our product is given.
    - 1 (Very Unlikely)
    - 2 (Unlikely)
    - 3 (Needs more Demonstration)
    - 4 (Likely)
    - 5 (Very Likely)
12. Do you find variable cutter size conducive to your kitchen work? e.g., detachable cuter Blades.
    - Yes
    - No

We prepared a separate survey segment for restauranteurs from various fast-food chain and restaurants so that we could take insight into which types of food production can be facilitated by our product. The three Questions are as follows:

13. Suppose, a customer has ordered a dish/menu that requires finely chopped vegetables/ingredients. What is the average waiting time for that customer?
    - 10-15 min
    - 15-20 min
    - 20-25 min
    - 25 and above
14. How much do you think a variable sized vegetable cutter would be able to reduce the waiting time / be beneficial to the customers?
    - None at all
    - Moderately
    - Highly
15. What type of food items do you think the vegetable cutter should be capable of cutting? (Multiple Choice)
    - Fried food (ex: Wedges, French Fries etc.)
    - Salad (ex: Coleslaw)
    - Fruits for desert/salad
    - Bacon/Meat products
    - Herbs
    - Dairy products (ex: Cheese)
    - Garnishes (ex: Lettuce, Radish, Cucumber, Carrot etc.)

16. How would you like to receive the aforementioned product?

- Home Delivery
- On Shop

17. How much would you be willing to pay for a high quality dual sided vegetable cutter?

- 4000-6000
- 6000-8000
- 8000-10000
- 10000tk and above

**Appendix B: Result of tensile test of some Materials**

Table A-1: Different material property (as example: shear strength, yield strength etc.) values

| | | | Strength (Tensile) | | | | | |
|---|---|---|---|---|---|---|---|---|
| Number | Material | Condition | Yield $S_y$, MPa (kpsi) | Ultimate $S_u$, MPa (kpsi) | Fracture, $\sigma_f$, MPa (kpsi) | Coefficient $\sigma_0$, MPa (kpsi) | Strain Strength, Exponent $m$ | Fracture Strain $\epsilon_f$ |
| 1018 | Steel | Annealed | 220 (32.0) | 341 (49.5) | 628 (91.1)† | 620 (90.0) | 0.25 | 1.05 |
| 1144 | Steel | Annealed | 358 (52.0) | 646 (93.7) | 898 (130)† | 992 (144) | 0.14 | 0.49 |
| 1212 | Steel | HR | 193 (28.0) | 424 (61.5) | 729 (106)† | 758 (110) | 0.24 | 0.85 |
| 1045 | Steel | Q&T 600°F | 1520 (220) | 1580 (230) | 2380 (345) | 1880 (273)† | 0.041 | 0.81 |
| 4142 | Steel | Q&T 600°F | 1720 (250) | 1930 (280) | 2340 (340) | 1760 (255)† | 0.048 | 0.43 |
| 303 | Stainless steel | Annealed | 241 (35.0) | 601 (87.3) | 1520 (221)† | 1410 (205) | 0.51 | 1.16 |
| 304 | Stainless steel | Annealed | 276 (40.0) | 568 (82.4) | 1600 (233)† | 1270 (185) | 0.45 | 1.67 |
| 2011 | Aluminum alloy | T6 | 169 (24.5) | 324 (47.0) | 325 (47.2)† | 620 (90) | 0.28 | 0.10 |
| 2024 | Aluminum alloy | T4 | 296 (43.0) | 446 (64.8) | 533 (77.3)† | 689 (100) | 0.15 | 0.18 |
| 7075 | Aluminum alloy | T6 | 542 (78.6) | 593 (86.0) | 706 (102)† | 882 (128) | 0.13 | 0.18 |

*Values from one or two heats and believed to be attainable using proper purchase specifications. The fracture strain may vary as much as 100 percent.

†Derived value.

# References


[1] W. L. JOHAN LENNEFALK, "Health on the rise – Opportunities in China within healthy food, beverages, and supplements," 19 01 2022. [Online]. Available: https://www.business-sweden.com/insights/articles/health-on-the-rise--opportunities-in-china-within-healthy-food-beverages-and-supplements/.

[2] A. a. Hasin, Quality Control and Management, Dhaka: Bangladesh Business Solutions, 2007.

[3] R. G. Budynas and J. K. Nisbett, Shigley's Mechanical Engineering Design, Haryana: Rajkamal Electric Press, 2021.

[4] "ChatGpt," [Online]. Available: chat.openai.com.

[5] Crown.com.bd, "WELDING MACHINE MIG 200GW RILAND," Riland, [Online]. Available: https://crown.com.bd/product/product?product_id=11084. [Accessed 08 09 2023].

[6] Indiamart, "20-400 ARC 400 Z298 JASIC Welding Machine 3 Phase," Adinath Equipments, [Online]. Available: https://www.indiamart.com/proddetail/arc-400-z298-jasic-welding-machine-3-phase-24509295591.html. [Accessed 08 09 2023].

[7] Indiamart, "MacPower Industries Horizontal Turbo Universal Milling Machine, Model Name/Number: MAC-2," MacPower Industries, [Online]. Available: https://www.indiamart.com/proddetail/turbo-universal-milling-machine-21604452462.html. [Accessed 08 09 2023].

[8] Amazon.com, "Inditrust 1400W 11000 RPM Powerful Cutting Machine For Wood/Marble/Granite/Metal With 3 wheels Handheld Tile Cutter," IndiTrust, [Online]. Available: https://www.amazon.in/Inditrust-Powerful-Cutting-Machine-Handheld/dp/B09C7C246V. [Accessed 08 09 2023].

[9] Wikipedia, "Scotch yoke," [Online]. Available: https://en.wikipedia.org/wiki/Scotch_yoke. [Accessed 08 09 2023].

[10] EngineersGallery, "Scotch Yoke Mechanism : Understanding," [Online]. Available: https://www.engineersgallery.com/scotch-yoke-mechanism-understanding/. [Accessed 08 09 2023].

[11] K. Riggs, "Which Plastics Are Safe for Food Storage?," 23 07 2009. [Online]. Available: https://extension.usu.edu/archive/plastics-for-storage. [Accessed 08 09 2023].

[12] S. Affiliate, "Top 5 Vegetable Cutting Scissors: Get Perfectly Shaped Veggies Every Time," 27 06 2023. [Online]. Available: https://www.slurrp.com/article/top-5-vegetable-cutting-scissors-get-perfectly-shaped-veggies-every-time-1687848746512. [Accessed 08 09 2023].

[13] T. R. Center, "Short memo to understand what rubber to use when," [Online]. Available: https://www.rubbercenter.com/blog/what-rubber-to-use. [Accessed 08 09 2023].

[14] A. W. Fabrication, "Food Grade Welding," [Online]. Available: https://ampweldingfabrication.com/food-grade-welding/. [Accessed 08 09 2023].

[15] MatWeb, "Online Materials Information Resource," [Online]. Available: https://www.matweb.com/. [Accessed 08 09 2023].

[16] S. Hiziroglu, "Strength Properties of Wood for Practical Applications," 07 2016. [Online]. Available: https://extension.okstate.edu/fact-sheets/strength-properties-of-wood-for-practical-applications.html. [Accessed 08 09 2023].

[17] R. Elmendorp, "Bicycle handlebar grips," 12 11 2012. [Online]. Available: https://grabcad.com/library/bicycle-handlebar-grips. [Accessed 08 09 2023].

[18] M. A. Rahim, "Automated Vegetable Cutter," 23 05 2017. [Online]. Available: https://grabcad.com/library/automated-vegetable-cutter-1. [Accessed 08 09 2023].

[19] N. Chakraborty, "SCOTCH-YOKE MECHANISM," 16 03 2015. [Online]. Available: https://grabcad.com/library/scotch-yoke-mechanism-7. [Accessed 08 09 2023].

[20] K. T. Ulrich, S. D. Eppinger and C. M. Yang, Product Design and Development, New York: McGraw-Hill Education, 2020.