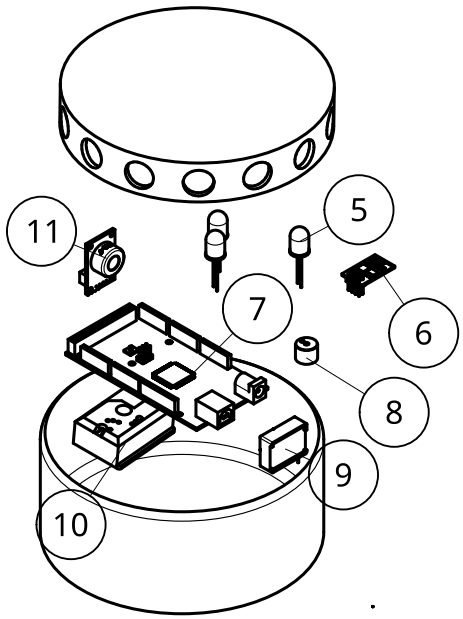


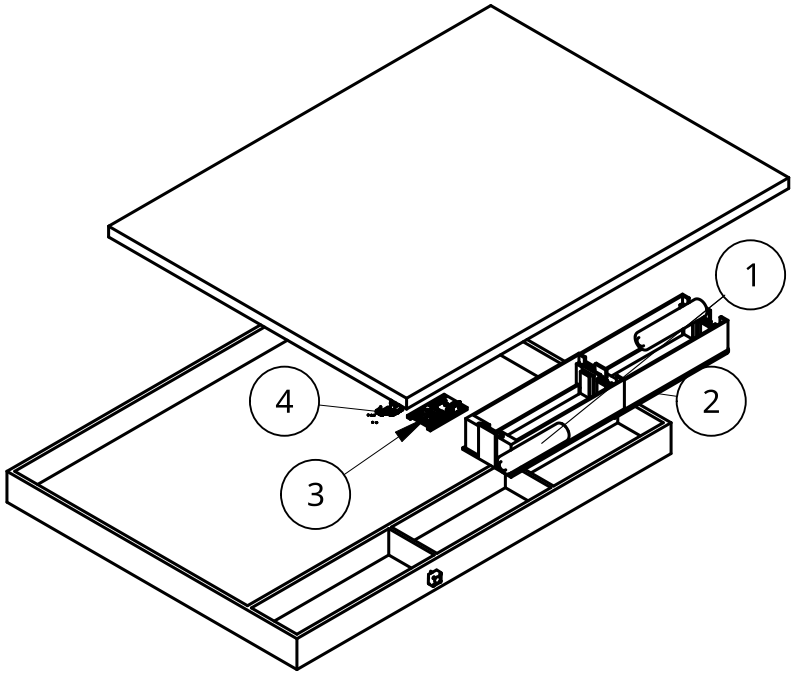


| N° | Producto | Cantidad |
|---|---|---|
| 1 | Pilas Leasong | 2 |
| 2 | Portapilas | 1 |
| 3 | Tp4056 | 1 |
| 4 | 2ph828 SBX Step Up | 1 |
| 5 | Leds | 3 |
| 6 | Esp8266 wifi | 1 |
| 7 | Arduino Mega | 1 |
| 8 | Buzzer | 1 |
| 9 | Co2 mh-z19 | 1 |
| 10 | Sensor de partículas | 1 |
| 11 | Mq-7 | 1 |

UNLESS OTHERWISE SPECIFIED, DIMENSIONS ARE IN INCHES
.XX = ±.0-
.XXX = ±.00-
.XXXX = ±.000-
ANGULAR = ± °
FRACTIONAL = ±
SURFACE FINISH

DO NOT SCALE DRAWING

BREAK ALL SHARP EDGES AND REMOVE BURRS

THIRD ANGLE PROJECTION

| N° | NAME | DNI |
|---|---|---|
| 1 | MILAGROS ACEVEDO VALER | 71341765 |
| 2 | | |
| 3 | | |
| 4 | | |

MATERIAL: -

FINISH: 6/02/2004

Univerdiad Peruana Cayetano Heredia

TITLE: Prototipo del grupo 11

SIZE: A

DWG NO.: Montaje_de_componentes

REV.:

SCALE: 1:4

WEIGHT: ___

SHEET: 1 of 1