A MINI PROJECT ON

SIMULATION OF IOT BASED HOME AUTOMATION SYSTEM USING PROTEUS

in the partial fulfillment of the requirements for the award of the degree of

BACHELOR OF TECHNOLOGY

In

COMPUTER SCIENCE AND INFORMATION TECHNOLOGY

Submitted by

T. DOONDI ASHLESH	**19B81A3311**
B. NIKHIL	**19B81A3327**
S. SHARATH CHANDRA	**19B81A3344**

Under the guidance of

Dr. R.Raja

Associate Professor

DEPARTMENT OF COMPUTER SCIENCE AND INFORMATION TECHNOLOGY

CVR COLLEGE OF ENGINEERING

An Autonomous institution, NBA, NAAC Accredited and Affiliated to JNTUH, Hyderabad

Vastunagar, Mangalpalli (V), Ibrahimpatnam (M), Rangareddy (D), Telangana- 501 510

DECEMBER 2022

CERTIFICATE

This is to certify that the minor project report entitled "**SIMULATION OF IOT BASED HOME AUTOMATION SYSTEM USING PROTEUS**" bonafide record of work carried out by **T. DOONDI ASHLESH (19B81A3311), B.NIKHIL (19B81A3327), S. SHARATH CHANDRA REDDY (19B81A3344)** submitted to **DR. R.RAJA** for the requirement of the award of **Bachelor of Technology** in **Computer Science and Information Technology** to the CVR College of Engineering, affiliated to Jawaharlal Nehru Technological University Hyderabad, Hyderabad during the year 2022-2023.

Project Guide	Head of the Department
Dr. R.Raja	Dr. Lakshmi H N
Associate Professor	Professor & HoD ET
CSIT Department	

Project Coordinator	External Examiner

DECLARATION

We hereby declare that the project report entitled **"SIMULATION OF IOT BASED HOME AUTOMATION SYSTEM USING PROTEUS"** is an original work done and submitted to CSIT Department, CVR College of Engineering, affiliated to Jawaharlal Nehru Technological University Hyderabad, in partial fulfillment for the requirement of the award of Bachelor of Technology in Computer Science and Information Technology and it is a record of bonafide project work carried out by us under the guidance of **Dr. R.Raja** , Associate Professor Department of Computer Science and Information Technology.

We further declare that the work reported in this project has not been submitted, either in part or in full, for the award of any other degree or diploma in this Institute or any other Institute or University.

Signature of the Student

T. Doondi Ashlesh

Signature of the Student

B. Nikhil

Signature of the Student

S. Sharath Chandra

ACKNOWLEDGEMENT

The success and outcome of this project require a lot of guidance and assistance from many people and we are extremely privileged to have got this all along with the completion of our project. All that we have done is only due to such supervision and assistance and we would not forget to thank them.

We respect and thank our internal guide **Dr.R.Raja,** for providing us an opportunity to do this project work in CVR College of Engineering and giving us all the support and guidance, which made us complete the project duly. We are extremely thankful to him for providing such a nice support and guidance, although he/she had a busy schedule managing the official affairs.

We would like to thank the Head of the Department, Professor **Dr.Lakshmi H N** for her meticulous care and cooperation throughout the project work.

We thank **Dr.R.Raja**, Project Coordinator for providing us an opportunity to do this project and extending good support and guidance.

We are thankful for and fortunate enough to get constant encouragement, support, and guidance from all **Teaching staff of CSIT Department** which helped us in successfully completing our project work. Also, I would like to extend our sincere esteem to all staff in the laboratory for their timely support.

ABSTRACT

IoT comes across as a technology which transforms the way we perceive our surroundings. IoT is considered to be a network of interconnected physical objects/things around us that communicate with each other over the Internet **[1]**.

At the same time the ability to control our everyday appliances over the internet using IoT makes our lives easier.

Internet of Things (IoT) based Home Automation conceptualizes the idea of remotely connecting and monitoring real world objects (things) through the Internet. When it comes to our house, this concept can be aptly incorporated to make it smarter, safer and automated **[1]**. This IoT project focuses on building a smart wireless home security system which sends alerts to the owner by using Internet in case of any trespass and raises an alarm optionally. Besides, the same can also be utilized for home automation by making use of the same set of sensors **[2]**.

There are various ways of home automation but in this project, we describe the software simulation of home automation using various sensors like PIR, mq2 with Raspberry Pi, where Raspberry Pi plays an important role in the simulation it serves as the controlling and monitoring unit of the circuit **[3]**. But it becomes a bit complicated whenever we're going to apply our concept directly to the hardware, so for this we need to do the Proteus simulation of the circuit before preparing the hardware.

This simulation acts as a basic model of the circuit in which we can see the output changing with respect to input. Proteus Software provides all the components, and it is also straightforward to use

TABLE OF CONTENTS

Table of Contents			
			Page No.
		List of Figures	Vii
		Abbreviations	Viii
1		**INTRODUCTION**	1
	1.1	Motivation	1
	1.2	Problem statement	2
	1.3	Project Objectives	3
	1.4	Project report Organization	4
2		**LITERATURE SURVEY**	5
	2.1	Existing work	8
	2.2	Limitations of Existing work	9
3		**SOFTWARE AND HARDWARE SPECIFICATIONS**	10
	3.1	Software requirements	10
	3.2	Hardware requirements	12
4		**PROPOSED SYSTEM DESIGN**	23
	4.1	Proposed methods	23
	4.2	Class Diagram	27
	4.3	Use case Diagram	29
	4.4	Sequence Diagram	30
	4.5	Activity Diagram	38
	4.6	System Architecture	40
	4.7	Technology Description	41
5		**IMPLEMENTATION AND TESTING**	43
	5.1	Implementation	43
	5.2	Front page Screenshot	45
6		**CONCLUSION AND FUTURE SCOPE**	46
		REFERENCES	48

List of Figures

Figure	Title	Page number
3.1	Raspberry Pi 4 model B	10
3.2	DC- Motor	11
3.3	MQ-2 Gas Sensor	11
3.4	PIR Motion Sensor	12
3.5	Relay Module	13
3.6	Torch LDR sensor	13
3.7	DC Operated Buzzer Module	14
3.8	L293D motor driver	15
3.9	LED	15
3.10	LM016L LCD module (16x2)	16
3.11	LM35 Temperature Sensor	16
3.12	Analog to digital conversion module	17
4.1	Home Automation System schematic design	18
4.2	Class diagram of Home Automation System	21

4.3	Use case diagram of Home Automation System	22
4.4	Sequence diagram of Home Automation System	23
4.5	Sequence diagram of Automatic Light System	24
4.6	Sequence diagram of Temperature and Fan Automation System	25
4.7	Sequence diagram of Gas Detection System	26
4.8	Activity Diagram of Home Automation System	28
4.9	System Architecture	29
5.1	Screenshot of Proteus working simulation window	37

List of Abbreviations

- GSM: Global system of Mobile Communication
- SMS: Short Messaging service
- PIR: Passive Infrared ray
- LCD: Liquid-Crystal Display
- LED: Light Emitting Diode
- LDR: Light Dependent Resistor
- GPIO: General purpose input-output pin
- DC: Direct current

CHAPTER 1

INTRODUCTION

Motivation

The main motive of this system is to control the home appliances and electronic devices with the help of a supervisory system. The supervisory system is designed in such a way that everyone can access it. Home Automation simply means making your Home Smart **[1]**.

In actual sense it becomes smarter only when IoT, i.e. Internet of Things comes into the role .We have countless benefits as we can save our energy and connect "n" number of appliances with its help.

With help of IoT , everyone can have access to their home appliances through Google clouds as it helps in passing the information **[2]**.Technology is changing and today's world demands "Smart Living" , using IoT it can be turned into reality .Smart Homes results into a Smart City & a Smart City results into a Smart world **[3].**

Home One Technologies is a company which uses IoT for Home Automation and provides advantage of a Complete Wireless & Retrofit Solution. Also, it becomes Convenient and easy to operate Electrical Appliances from anywhere in the world. Making your homes Smart is not anymore a difficult task **[3]**.

Problem Statement

- The field of Automation has been well advanced in Industries, majority of manufacturing, processing plants and other major sectors. But automation has yet to find stability in home environment **[1].**

- If automation was to be used in homes then everyday life activities would become easier to manage and monitor.

- Nowadays, people with the hectic daily life routine sometimes make them forgetful to switch off the devices at home. As a human being we can't run from the clumsiness attitude plus with our packed daily routine life that sometimes makes ourselves such in hurry situation that sometimes makes us forgot to switch off the lamps **[2].** It will cause the electricity bill rose sharply. Besides, it is one of the electricity wastage that will lead the earth to become unhealthy ones.

- The elderly and the handicapped user faced problem to manually access control of light and fan instead of automation process **[8]**. So, the need for an efficient home automation system which is not only energy reliable but also easy to understand and implement is of high importance in the upcoming future.

- Earlier, in projects for controlling home appliances we need to switch it manually to operate. Many of them secure IOT- based smart home automation system were developed it and these existing systems have ventured into the best of home automation but have apparently failed to provide cost effective solutions for the same **[9]**. The existing system has consumed more power and has limited coverage areas to control the appliances using raspberry pi.

Project Objectives

1. Simulating a Home Automation System based on IOT for personal environment
2. Utilization of devices those are easy to install and function with.
3. Implementation using low-price materials and devices for developing the system
4. Make it suitable to control home environment in an easy, smart and in a comfortable way
5. To design a simple system that allows even inexperienced and disabled people to us it.
6. Implementing safety systems for incidents involving fire/gas.
7. Implementing Human presence detection system for efficient home control.
8. Make it scalable for future add-ons.

Project Report Organization

a. Literature Survey

In this section, we have discussed similar existing projects. We have given the examples of different situations where internet of things (IOT) has been applied and specific implementationsof home automation. The next part of this section comprises of the limitations in these existing systems.

b. Software and Hardware requirements

This section discusses about the different kinds of software used in our project Furthermore, we have mentioned the specifications of hardware devices that are required to build this project.

c. Proposed System Design

This section contains a detailed review of the proposed system design of the project. We have included various UML diagrams that include use case diagram, class diagram, sequence diagram, and activity diagram. This section also provides a clear view about the architecture, flow, and functionality of our project.

d. Implementation and Testing

This section gives details about the implementation of the project and testing result. And every step that we have followed is being discussed, that is being explained clearly in this section. Thenit is tested, and the results are noted.

e. Conclusion and Future Scope

This section addresses all the limitations in the existing works and how our work compares to them. We also discuss few additional features that can be added to our work to improve it in the future.

CHAPTER 2

LITERATURE SURVEY

"Smart Energy Efficient Home Automation System using IOT", by Satyendra K. Vishwakarma, Prashant Upadhyaya, Babita Kumari, Arun Kumar Mishra [8].

This paper presents a step-by-step procedure of a smart home automation controller. It uses IOT to convert home appliances to smart and intelligent devices, with the help of design control. An energy efficient system is designed that accesses the smart home remotely using IOT connectivity.

"IOT Based Smart Security and Home Automation", by Shardha Somani, Parikshit Solunke, Shaunak Oke, Parth Medhi, Prof. P. P. Laturkar [9].

This paper focuses on a system that provides features of Home Automation relying on IOT to operate easily, in addition to that it includes a camera module and provides home security. The android application basically converts Smartphone into a remote for all home appliances. Security is achieved with motion sensors if movement is sensed at the entrance of the house; a notification is sent that contains a photo of house entrance in real time. This notification will be received by the owner of the house via internet such that app can trigger a notification. So owner can raise an alarm in case of any intrusion or he/she can toggle the appliances like opening the door if the person is a guest. The system uses Raspberry Pi, a small sized computer which acts as server for the system. The smart home consist two modules. Home automation that consists; fan light and door controller, and security module that consists; smoke sensor motion sensor and camera module.

"A Dynamic Distributed Energy Management Algorithm of Home Sensor Network for Home Automation System", by Tui-Yi Yang, Chu-Sing Yang, Tien-Wen Sung [10].

This paper proposes an optimization of home power consumption based on PLC (Power Line Communication) for an easy to access home energy consumption. This also proposes a Zigbee and PLC based renewable energy gateway to monitor the energy generation of renewable energies. ACS and DDEM algorithm are proposed for the design of an intelligent distribution of power management system to make sure ongoing power supply of home networks. To provide efficient power management the power supply models of home sensor network are classified groups viz. main supply only, main supply and backup battery, rechargeable battery power and non-rechargeable battery power. Devices with particular features are assigned to these groups. It targets to establish real time processing scheme to address variable sensor network topologies.

"Enhance Smart Home Automation System based on Internet of Things", by Tushar Churasia and Prashant Kumar Jain [11].

This paper proposes a system that develops a model to reduce the computation overhead in existing smart home solutions that uses various encryption technologies like AES, ECHD, hybrid, etc. these solutions use intermediate gateway for connecting various sensor devices. The proposed model provides a method for automation with sensor based learning. The system uses temperature sensor for development but other sensors can also be used as per requirement. These smart home devices with sensors can configure themselves autonomously and can operate without human intervention. This work minimizes encryption decryption and focuses on authentication and automation of smart home devices with learning. The system bypasses local gateway mentioned in existing system to provide better security for smart home devices and sensor data and save computation overhead. The real time broker cloud is directly connected with smart home and manages all incoming and outgoing request between users and devices. The main purpose to use real time broker cloud is save time of cryptographic operations.

“Visual Machine Intelligence for Home Automation”, by Suraj, Ish Kool, Dharmendra Kumar, Shovan Barman [12].

The paper presents vision-based machine intelligence system to sense on/off state of common home appliance. Proposed method of sensing the state of appliances results on a novel home automation system. The accessibility of suite of devices in the home over a remote network is facilitated by the IP Addressing methods in the IOT. This project uses two boards viz. Raspberry Pi and Intel Galileo Gen 2. The communication between the User devices, Raspberry Pi and the Intel Galileo boards happens over a wireless network. The UDP protocol is deployed to facilitate the wireless communication of the nodes present in the home automation network. A Pi Cam and a USB Logitech camera attached to the rotating shaft of two different servo motor capture snapshots that are passed as inputs to the Machine Learning based models trained using dlib-C++ to detect the state of the operation of the appliances. The proposed method uses visual modality to automate the appliances, as privacy concerns may emerge while using the images from some specific places, as a counter to this issue, an SPDT switch is added to the Raspberry Pi which when turned off ensures that even if the images are taken from the webcams, they are just passed as inputs to the machine learning models and are not displayed on the website when the users access the website on the server address obtained from Raspberry Pi.

Existing Work

Home automation or Smart Homes (also known as domotic) can be described as introduction of technology within the home environment to provide convenience, comfort, security and energy efficiency to its occupant **[2]**.

Adding intelligence to home environment can provide increased quality of life for the elderly and disabled people who might otherwise require caregivers or institutional care. There has been a significant increase in home automation in recent years due to higher affordability and advancement in Smart phones and tablets which allows vast connectivity **[2]**.

With the introduction of the Internet of Things, the research and implementation of home automation are getting more popular. Much of the research attention has been given in academia. Various wireless technologies that can support some form of remote data transfer, sensing and control suchas Bluetooth, Wi-Fi, RFID, and cellular networks have been utilized to embed various levels of intelligence in the home **[3]**.

The studies have presented Bluetooth based home automation systems using Android Smart phones without the Internet controllability. The devices are physically connected to a Bluetooth sub-controller which is then accessed and controlled by the Smart phone using built-in Bluetooth connectivity **[3]**. However, due to limited range of operation (maximum upto 100 m) the system is unable to cope with mobility and can only be controlled within the vicinity. Researchers have also attempted to provide network interoperability and remote access to control devices and appliances at home using home gateways. Researches introduced a Wi-Fi based home control system using PC based web server which manages the connected home devices **[3]**.

The devices were controlled only by using sensors and range is very less. They used only arduino and Bluetooth to operate the appliances for the projects.

Limitations of Existing Work

- The home automation system is implemented for decades but due to the costing and budgeting of the project, it remains a niche product for high-end consumers.
- The Intelligent Home Automation System, security is one of the major factors that does notimplement the home automation system
- They are of High cost and consume more energy to operate.
- The coverage of the area is very limited.
- Internet connectivity and its reliability is still unpredictable and in some cases, simply insufficient when it comes to propelling these smart devices.

CHAPTER 3

SOFTWARE AND HARDWARE REQUIREMENTS

Software requirements

- Proteus 8.9 professional-simulation software
- Python (version 3.7)

Hardware Requirements

- **Raspberry Pi 3 model B**

Figure 3.1 Raspberry Pi 4 model B

Processor: 64-bit quad-core ARM cortex-A53

Number of usb ports: 4

Audio outputs: 3.5mm stereo jack or HDMI

Supply: 5V 2.5A via micro USB

Processor speed: 1.2 GHz

Memory: 1GB

- **MOTOR-DC**

Figure 3.2 DC Motor

Voltage: 5-12 v

Rpm: 1000

Current at no load: 70mA

No-load speed: 9000 rpm

Loaded current: 250m

- **MQ-2 GAS SENSOR**

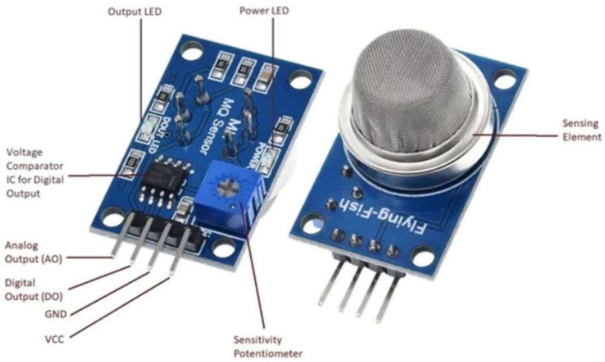

Figure 3.3 MQ-2 Gas Sensor

Load resistance: 20k ohm

ppm : 300-10000 (the amount of gas by volume in air)

voltage: 5v

Sensing resitance: 10k ohm – 60k ohm

Voltage: 24v DC

Heater voltage: 5.0v ± 0.1v AC or DC

Temperature humidity: 20°C ± 2°C

- **PIR MOTION SENSOR**

Figure 3.4 PIR Motion Sensor

Distance measuring range : 300 – 700cm

Voltage: 4.5 – 20V

Detection Angle: <140 degrees

Current: 0.06 mA

- **RELAY module – 5V 1channel**

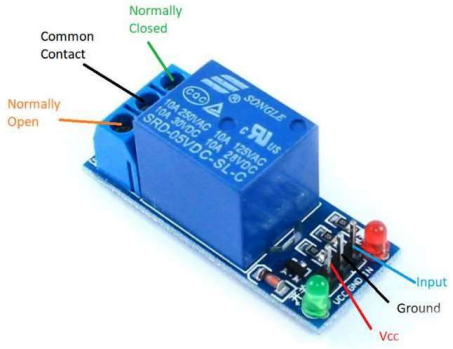

Fig 3.5 Relay Module

Voltage: 3.75v – 6v

Quiescent current: 2mA

Current (when relay is in active state): 70mA

Highest voltage: 250V AC / 30V DC

- **TORCH_LDR sensor (50-100 k ohms)**

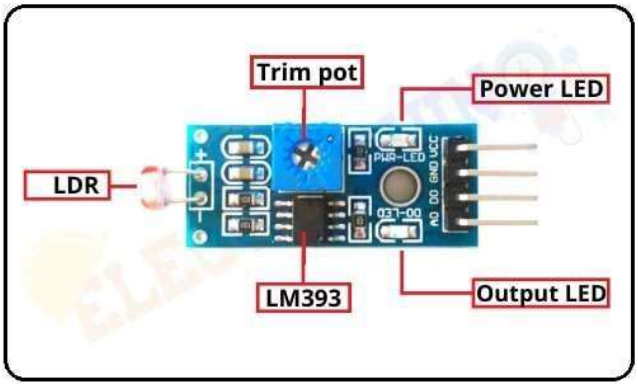

Figure 3.6 Torch LDR Sensor

Max power dissipation: 200mW

Max voltage @ 0 lux: 200V

Min. resistance @ 10lux: 1.8k ohm

Max. resistance @ 10lux: 4.5k ohm

Typ. resistance @ 100lux: 0.7k ohm

Dark resistance after 1 sec: 0.03M ohm

Dark resistance after 5 sec: 0.25 ohm

- **RESISTOR – 1k Ohm**

  Tolerance: ±1% to ±20%

  Temperature Coefficient of Resistance : 25°C.

- **DC operated buzzer module(85dB,2-2.6KHz)**

Fig 3.7 DC Operated buzzer module

Rated Voltage: 6V DC Operating

Voltage: 4-8V DC

Rated current: <30mA

Sound Type: Continuous Beep

Resonant Frequency: ~2300 Hz

- **L293D motor driver ic**

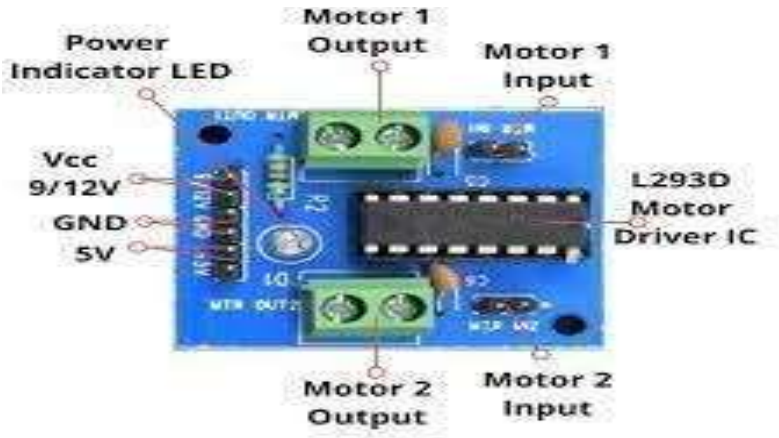

Fig 3.8 L293D motor driver

Wide Supply-Voltage Range: 4.5 V to 36 V

Separate Input- Logic Supply

Output Current : 600 mA Per Channel

- **LED-RED**

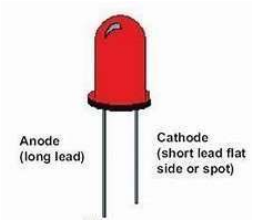

Figure 3.9 LED

Wavelength: 610-760

Forward Voltage: 1.6-2.0

- **LM016L LCD Module (16x2)**

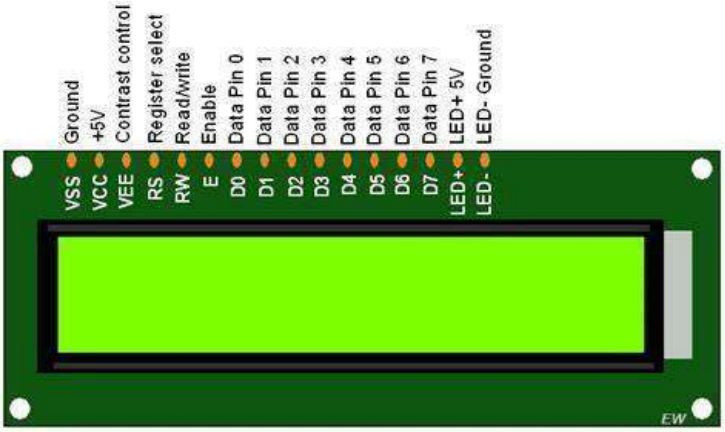

Figure 3.10 LCD

Effective display area: 61W x 15.8H mm

- **LM35 temperature sensor – Centigrade (100-500feet**

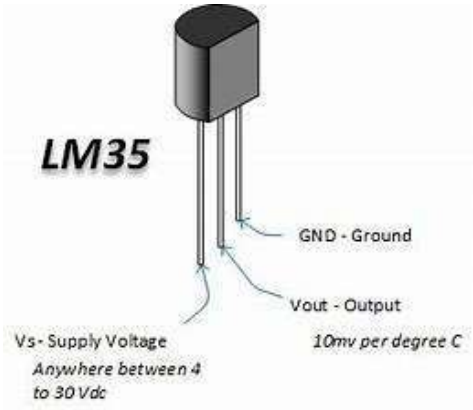

Figure 3.11 LM35 Temperature Sensor

- **MCP3208 – Analog to Digital Conversion module (~100 ksps , max 12 bit resolution)**

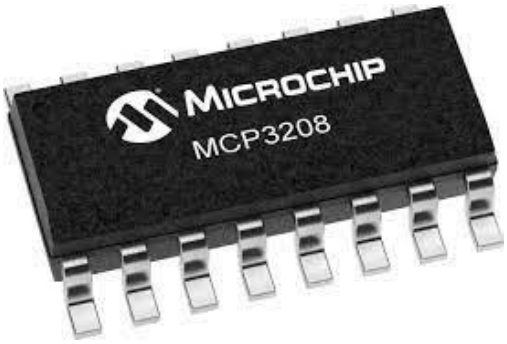

Figure 3.12 Analog to Digital Conversion module

Operating Temperature: 40°C - 85°C

Number of pins: 16

CHAPTER 4

PROPOSED SYSTEM DESIGN

Proposed Methods

The scope of this work is to develop a Home Automation system by using Raspberry Pi-3 which acts as an interface between the devices. The proposed system includes multiple sensors such as

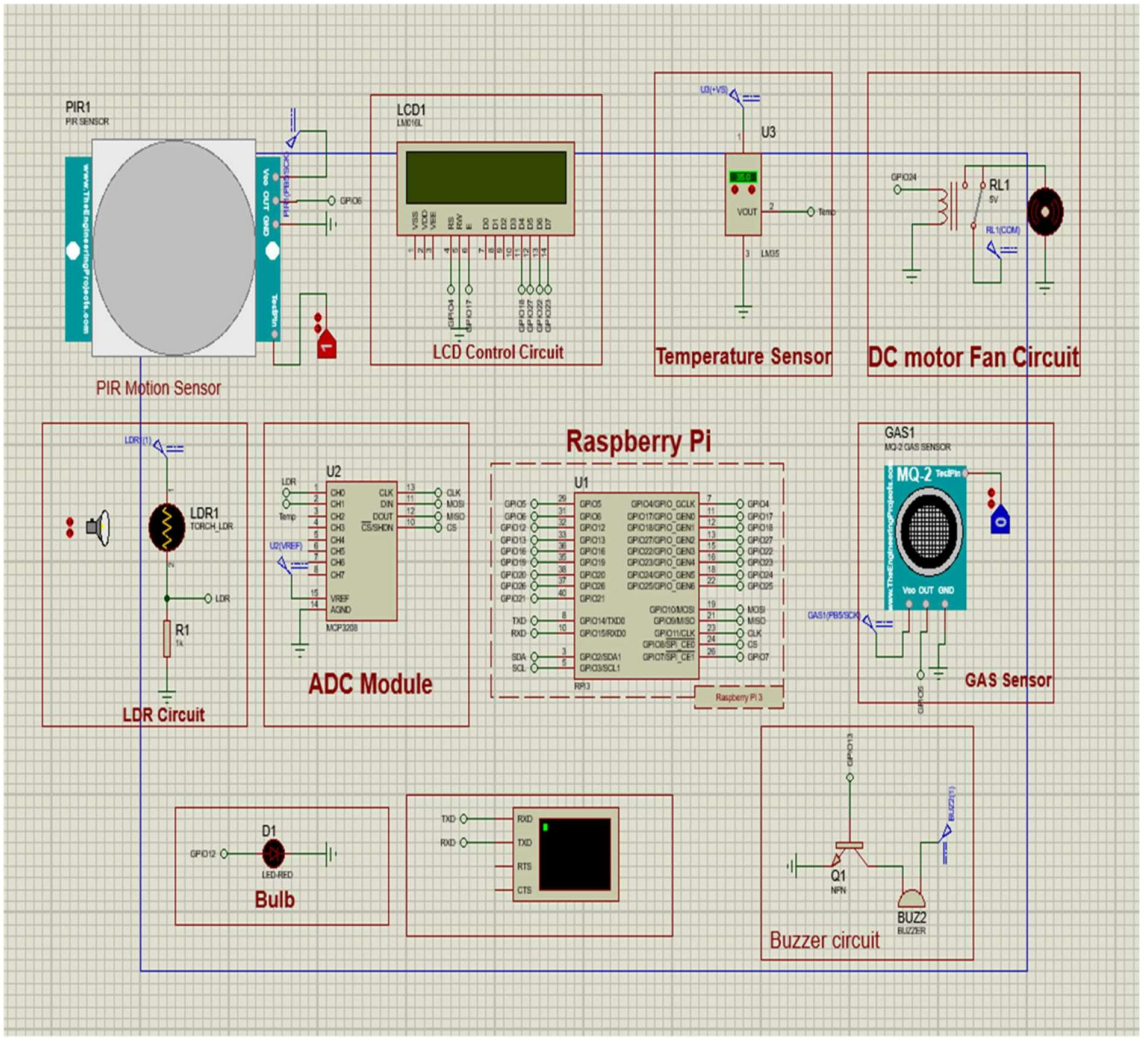

Figure 4.1 Home Automation System schematic design

PIR motion sensor to detect human presence and coordinate with others such as LDR sensor ,temperature sensor to control and regulate lights, model fan by automatically comparing the

preset values of Temperature ,light intensity along with gas detection sensor to trigger the buzzer alarm and send alerts using gsm module on detection of smoke to concerned host.

Gas detection system:

- Gas detection system includes MQ-2 gas sensor, Active Buzzer module, and GSM module.
- The MQ-2 gas sensor detects the presence of harmful gases such as (h2, CO, CH4, Propane, Alcohol, Smoke etc.. if any) in the home environment. The principle involves an electrochemical sensor which changes it's resistances for different gases.
- On detection of any of the mentioned harmful gases, the active buzzer module is turned on and thealarm is triggered.
- The GSM module, which consists of a SIM, then sends alerts in the form of SMS to the identified user mobile number.

Motion/Human Presence detection system:

- The motion detection system consists of a Passive Infrared Ray(PIR) motion sensor.
- The PIR motion sensor recognizes infrared light emitted from nearby objects.PIR sensors use thermal sensing.
- The sensor uses a pair of pyro electric sensors to detect heat energy in the surrounding environment .These two sensors sit beside each other, and when the signal differential between the two sensors changes(for example when a person enters the room), the sensor will engage.

Automatic lighting system:

- The lighting system consists of LDR sensor, LED bulb.
- The light system is enabled based on the PIR motion sensor's input i.e, only when a person is detected, the sensors are enabled. Once the LDR sensor is enabled, it gets light intensity reading from the surrounding environment. The working of LDR is based on Photo resistance of the diode i .e, when the intensity of light in the room is more, the resistance of the diode decreases and vice- versa. When light intensity is high, the resistance is low indicating a high pulse that denotes the intensity reading. Based on this reading , the raspberrypi computes and sends signals to the LED bulb/lights to turn On or Turn OFF.

Temperature and Automatic Fan system:

- The temperature and Fan system includes LM35 temperature sensor along with a DC fan Motor.
- Similar to the LDR sensor, the system is enabled based on the input from the PIR motion sensor.
- When a human presence is detected, the LM35 sensor senses the temperature of the surroundingenvironment. The Principle is when voltage increases, it results in the rise of temperature. Thisanalog reading is sent to the ADC module which is then converted to digital and sent to raspberryPi. The raspberryPi then computes and sends signal to DC fan motor to turn ON/OFF.

Display:

- Display system includes LCD screen of 16x2 length.
- In every step of the working, the related messages, Readings from sensors, status of operationaldevices are displayed on the LCD screen.

Class Diagram

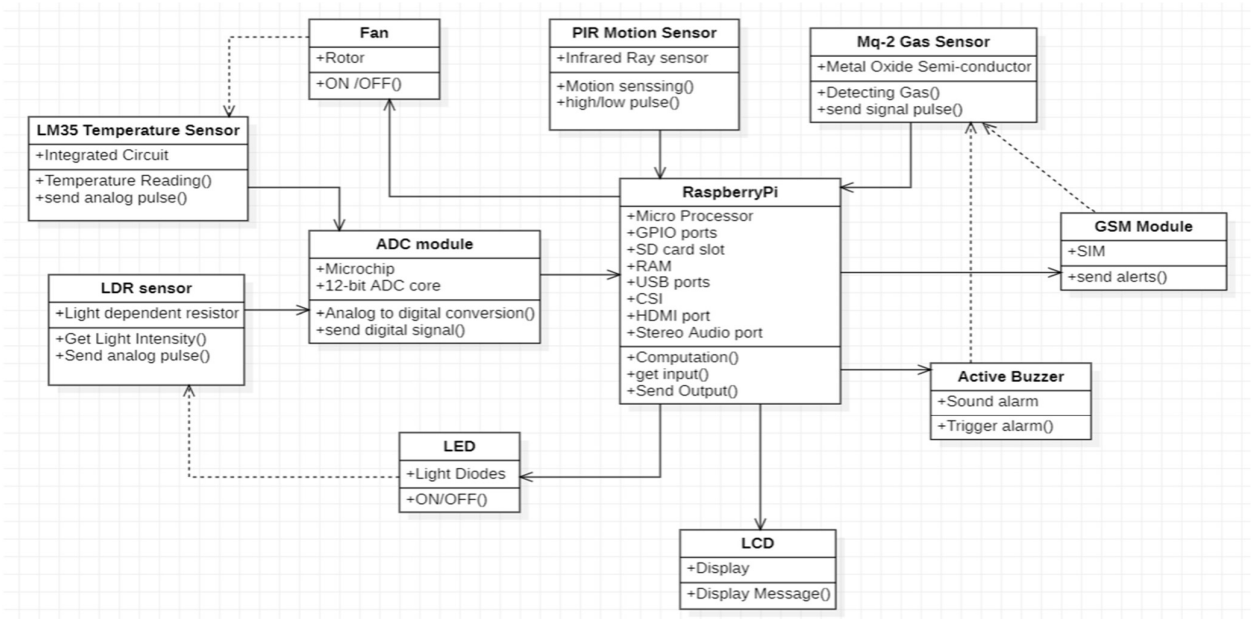

Figure 4.2 Class Diagram of Home Automation System

Class Diagram

- The above class diagram depicts the connections and interactions between the sensors and the raspberryPi micro-processor.
- At the very core of the system design is the RaspberryPi micro-processor which handles all the computations and synchronization of the sensors used.
- Every sensor has its own specific attributes and perform specific operations while coordinating with the raspberryPi.
- The directed edges from devices indicate the flow of transfer of signal and data.
- The indirect edges from devices indicate the dependency of the sensor with the specific device whose input triggers the sensor.

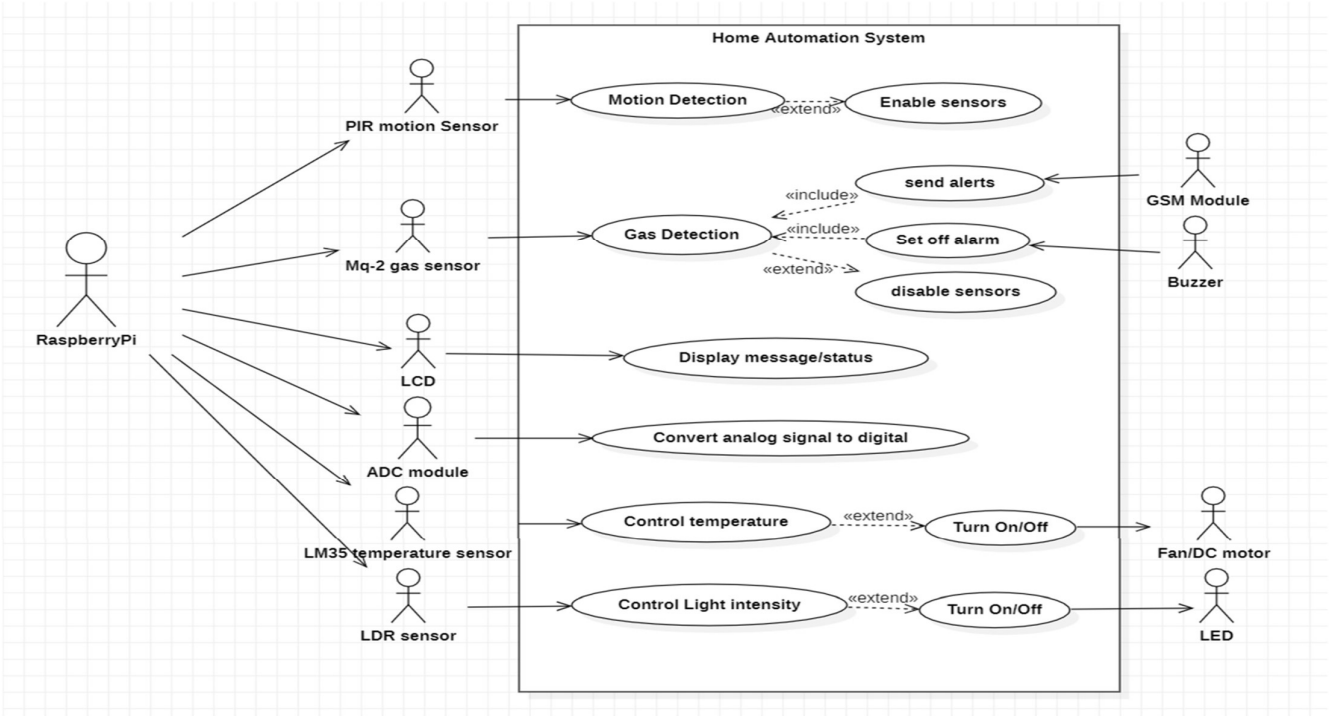

Figure 4.3 Use Case diagram of Home Automation System

Use case Diagram

The raspberrypi interacts with other sensors(actors) as depicted in the diagram above:

- The raspberrypi gets input from gas sensor if any gas is detected and then sends alerts using GSM module, Sets off alarm using buzzer module and disables remaining sensors
- If motion is detected based on the input from PIR motion sensor, raspberrypi then enables rest of the sensors. If not then the sensors stay disabled.
- After the detection of human, the raspberrypi interacts with temperature and LDR sensor to get temperature and light intensity readings respectively.
- These readings are converted to digital signals with the help of ADC module.
- Depending on the preset conditions for temperature and light intensity, the raspberryPi interacts with DC fan and LED bulb to turn them ON or OFF.
- Finally raspberryPi interacts with LCD to display the readings from sensors and the status of the DC fan and LED bulb.

Sequence Diagram

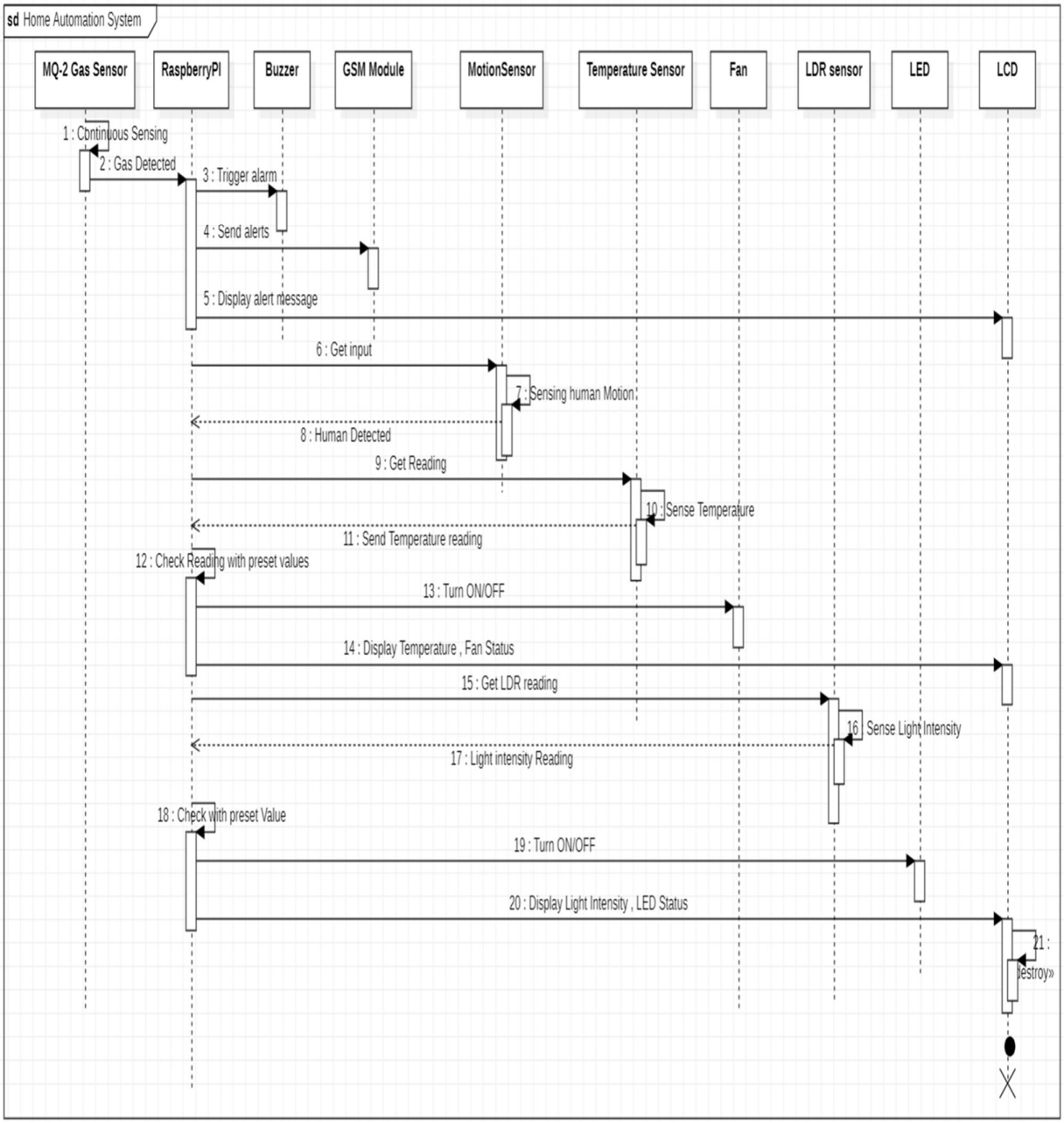

Figure 4.4 Sequence Diagram of Home Automation System

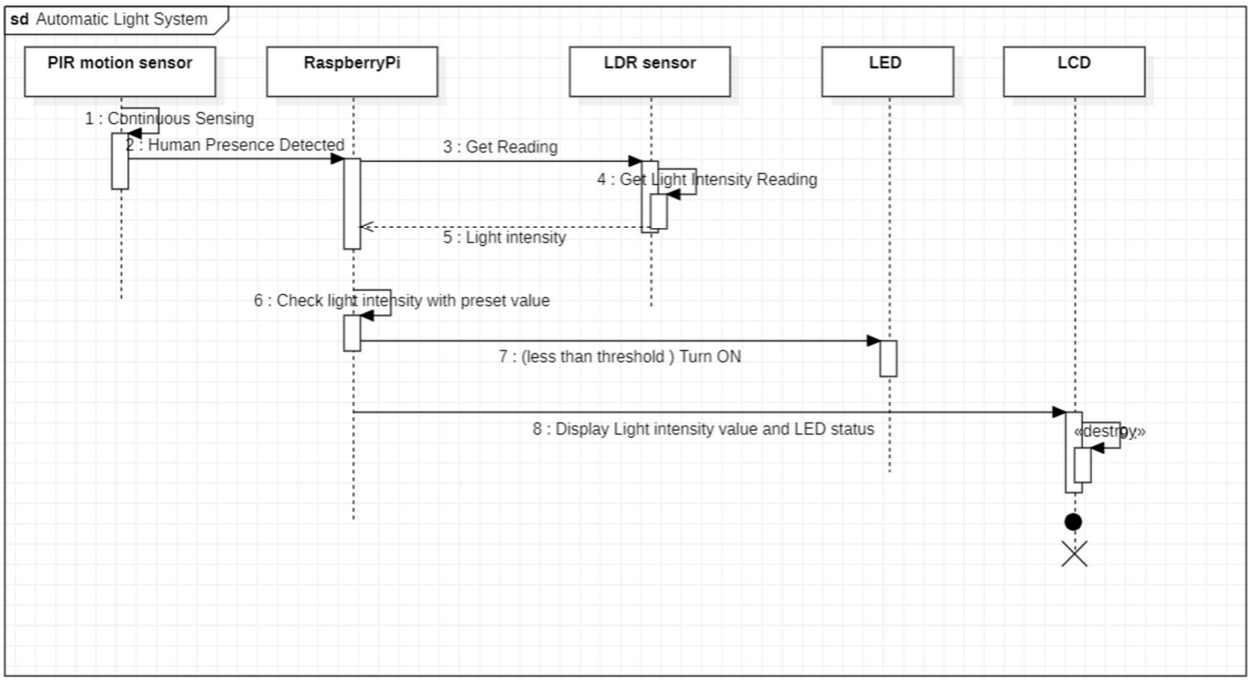

Figure 4.5 Sequence Diagram of Automatic Light System

Sequence diagram for Automatic Light System

The automatic light system follows the above diagram sequence:

- The LDR sensor is enabled after detection of motion from the PIR sensor.
- Then it takes the light intensity reading from the environment it is present in.
- This reading is sent to the raspberryPi.
- The raspberrpi then talies these values with the preset values.
- If the condition is met(reading < preset value) then the raspberrypi send a voltage pulse to turn On the LED light if not , the LED stays OFF.
- The readings and status of the LED are then displayed on the LCD.

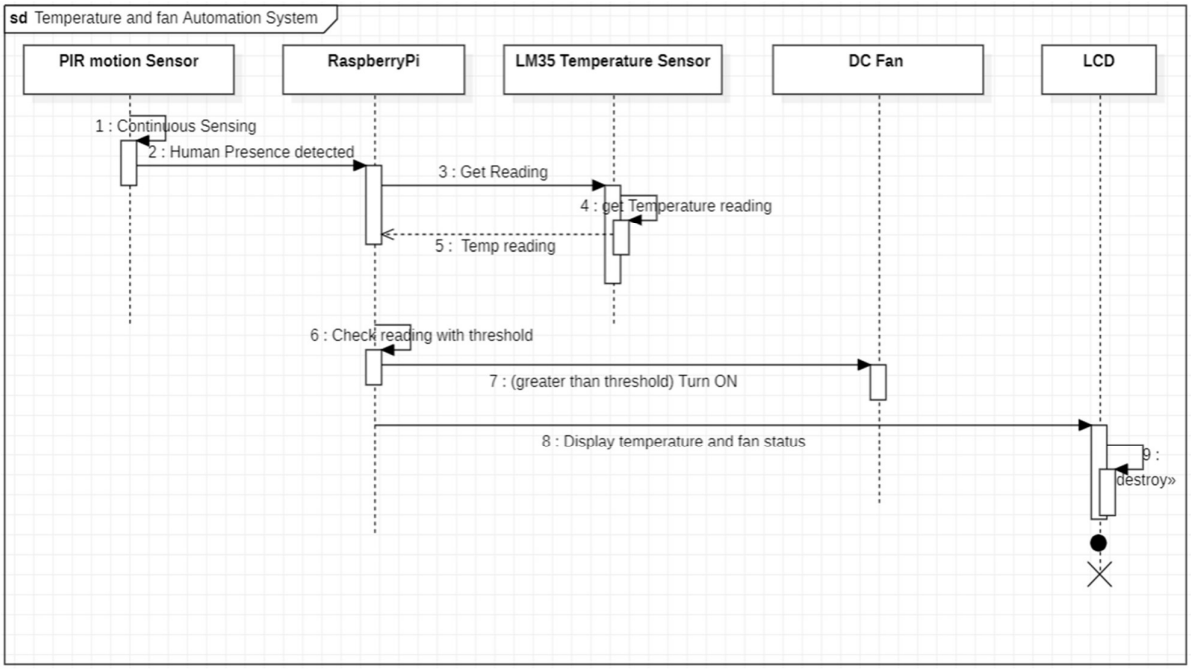

Figure 4.6 Sequence Diagram for Temperature and Fan Automation System

Sequence diagram for Temperature and Fan Automation System

Temperature and Automatic fan system flow is described in the above diagram:

- The temperature sensor gets enabled after detection of human from the PIR sensor
- The temperature sensor then continuously gets input from the environment.
- Then reading from the sensor is converted to digital using adc module and then sent to raspberrypi
- The raspberrypi then tallies the temperature reading with preset values.
- When the condition is met(reading>preset temperature value), the raspberrypi sends a voltage pulse to the DC fan to turn ON ,if not it stays on OFF condition.
- The reading from the temperature sensor and the status of the DC fan are then displayed on the LCD screen.

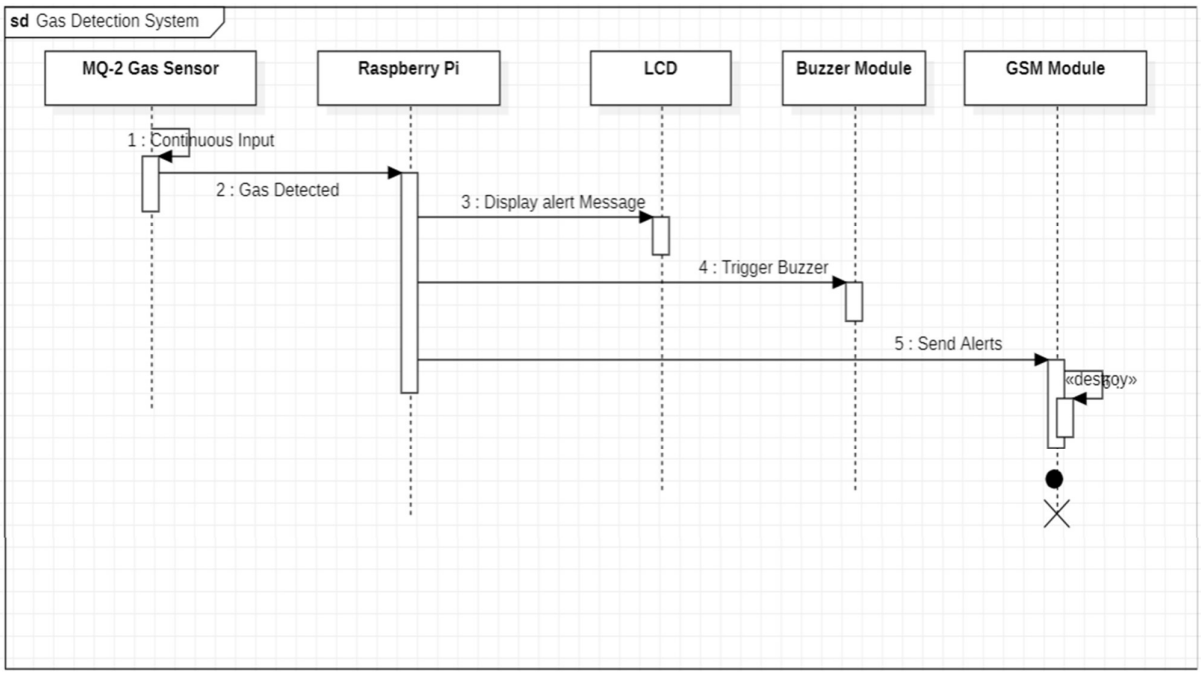

Figure 4.7 Sequence Diagram of Gas Detection System

Sequence diagram for Gas Detection System:

The gas detection system works as depicted in the above sequence diagram

- The gas sensor continuously takes input from the environment.
- When any gas or smoke is detected by the sensor, it sends a high voltage to the raspberrypi indicating gas has been detected.
- Once the raspberryPi gets input from the gas sensor, the raspberryPi inhibits other sensors from working.
- The raspberrypi then sends respective signals to LCD, Buzzer module, GSM module.

    - LCD - Display warning message
    - Buzzer module - To trigger alarm
    - GSM module - To Send SMS alerts to the registered mobile number.

Activity Diagram

The following diagram shows the activity flow for the Home automation System :

- The GAS sensor first detects for the presence of gas or smoke in the given environment.
- If the gas is detected, Warning message is displayed on the LCD, alarm gets triggered and alerts to registered user mobile via SMS.
- If no Gas is detected, then Pir motion sensor senses for human presence.
- If human presence is detected, then LDR sensor and Temperature sensor are enabled
- First, The LDR sensor takes Light intensity from the environment.
- If the reading is low then LED bulb is turned ON.
- Then, Temperature reading from the surroundings is taken from the temperature sensor.
- If the temperature is greater than room temperature, The DC fan is Turned ON.
- Finally, all the readings from the sensors and the status of the Dc fan and LED bulb are displayed on the LCD screen.

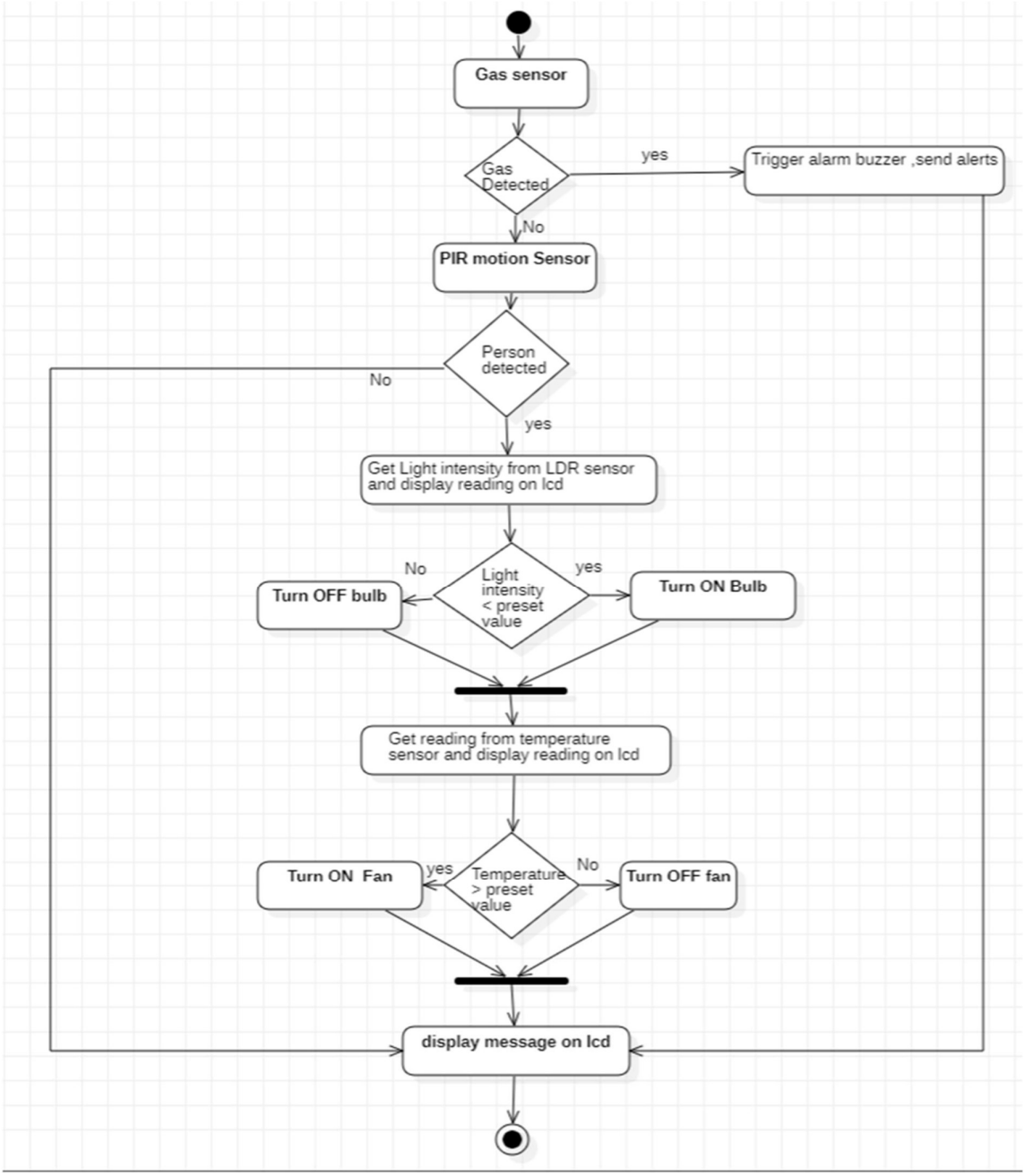

Figure 4.8 Activity Diagram of Home Automation System

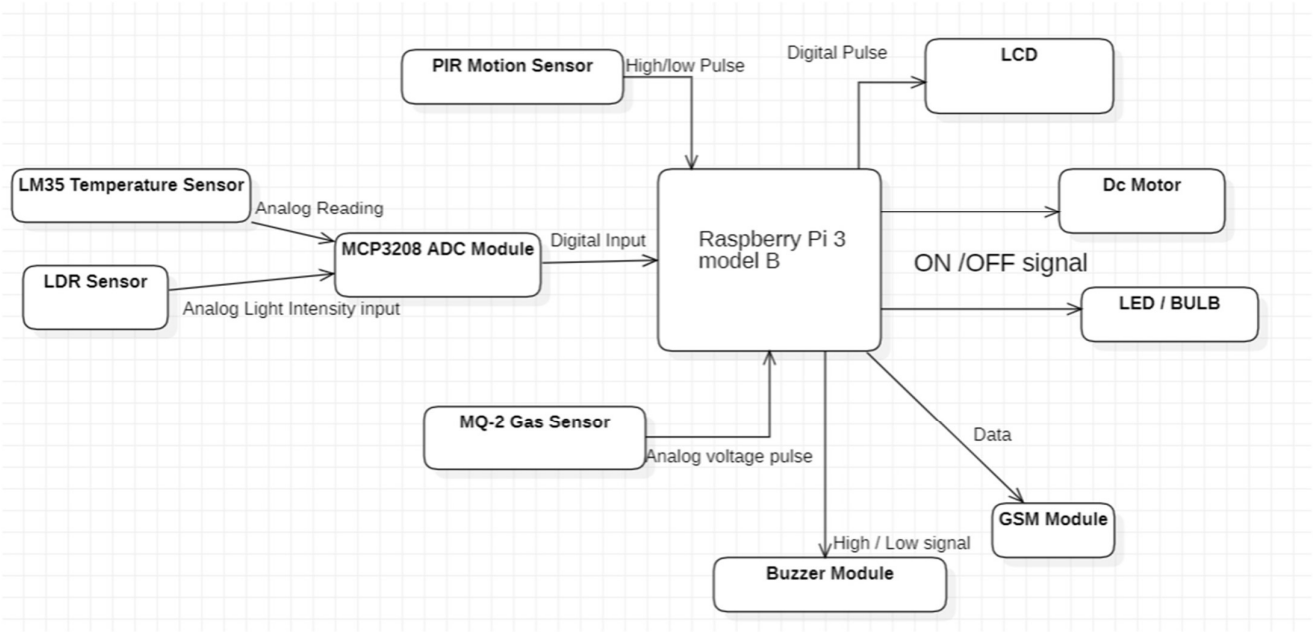

Figure 4.9 System Architecture of Home Automation System

System Architecture

The above diagram depicts the architecture for the Home Automation System.

- The Lm35temperature sensor,LDR sensor,AC module,PIR motion Sensor,MQ-2 Gas sensor all act as input devices to the raspberrypi micro controller.
- The LCD, Dc fan motor, LED bulb, GSM module, Buzzer module all act as output devices.
- These output devices get triggered based on the inputs received from the input sensors and output signals from the raspberrypi.
- Raspberrypi- acts as a micro controller command centre for the setup, coordinates with sensors
- LM35 temperature sensor - Sensor for sensing temperature readings
- LDR sensor - Sensor for Sensing Light Intensity in the particular surrounding.
- MCP3208 ADC module - To convert analog signals from temperature and LDR sensor to digital signals and send them to raspberrypi.
- PIR motion sensor - Detects any human presence based on passive infrared rays (heat emission)

- Mq-2 gas sensor - Detects the presence of harmful gases(H2,LPG,CH4,C0,Alcohol,Smmoke and Propane)
- Dc motor - to control the temperature in the room environment
- LED bulb - to adjust the light intensity in the room
- GSM module - To send SMS alerts to registered mobile number on detection of harmful gas detection.
- Buzzer module - to Sound off alarm on harmful gas detection,
- LCD - to display the messages, sensor readings, Device status.

Technology Description

- **Python (version 3.7)**

  Python offers concise and readable code. While complex algorithms and versatile workflows stand behind machine learning and AI, Python's simplicity allows developers to write reliable systems. Developers get to put all their effort into solving an ML problem instead of focusing on the technical nuances of the language.

- **Proteus 8.9 professional software**

  Proteus is a software platform that is used for simulation, analysis of the design of the project. It comprises basic layouts of components. It is easy to design proteus simulation. Proteus is currently the most powerful and cost-effective EDA tool in more than countries

Libraries

- Spidev
- Time
- RPi.GPio
- Pio and ports

Libraries Used:

- spidev : Library used to work with spi protocol based devices (ADC module) in python.

- time: Library used to add time related specifications such as delay during code execution etc.
- RPi.GPIO: Library used to access and work with General purpose input-output(GPIO) pins of raspberry pi
- pio and Ports : Library used for working with serial communication devices (GSM module) in python

Library methods used

- spidev.SpiDev() : Used to create a spi variable

- spidev.open (): used to open the spi communication. Connects to the specified SPI device.

- spidev.xfer2() :: Perform a SPI transaction: a list of bytes is written to the SPI device and as each byte in that list is sent out, it is replaced by the data simultaneously read from the SPI slave device over the MISO line.

- ljust (): method used to left align the string, using a specified character .

- Ports.uarts (): used to create a variable for serial communication. The UART serial port allows you to open a login session from a serial terminal application such as PuTTY.

- GPIO.setup() : Used to declare whether a pin is used as output or input

- GPIO.setmode(): It tells the library which pin numbering system you are going to use. BOARD signifies using the physical pin numbers on the RPi
- GPIO.setwarnings() : warns us if any current pin is previously used(set to false)

- GPIO.input(): input ([pin]) function is used to read an input pin value. The input() function will return either a True or False indicating whether the pin is HIGH or LOW.

- GPIO.output() :output([pin]) is used to display the value of an output pin

- time.sleep (): sleep function is used to add delay in the execution of a program.

Phases of Development

- Simulation Software Installation – Download and install Proteus version 8.9 with required libraries (PIR sensor library and gas sensor library) and create new project with raspberry pi as firmware.

- Hardware Schematic Design of Home automation system: Connecting the mentioned sensors and modules to gpio pins of raspberry pi on the simulation board to setup the system circuit. Also connect the other pins(VCC and ground pins) of sensors to the other hardware devices.

- Simulation Environment Creation:
    - open proteus 8.9 software
    - click on new project
    - provide name for the project with pdsprj extension(default).
    - check the create schematic option in the dialogue box
    - Then select do not create PCB layout
    - In the next dialogue box select create firmware project and select the family as raspberryPi
    - click on finish

- Schematic Design Connections:

    - MCP3208 ADC module connections:
        - CLK pin of ADC to CLK(GPIO11) pin of Raspberry Pi
        - DIN Pin to MOSI(GPIO 10) pin
        - DOUT pin to MISO (GPIO9) pin
        - CS pin of ADC to CS(SS) pin of raspberry Pi
        - VREF pin to DC supply (3.3v)
        - AGND pin to Ground

    - LM35 Temperature Sensor Connections:
        - First Pin to VCC (DC supply 3.3v)
        - Second pin to Channel 1 (CH1) pin of ADC module
        - Third Pin to Ground

- TORCH_LDR Sensor Connections:
    - First pin to DC supply(3.3v)
    - Second part to 1k ohm analog resistor (other end of resistor to ground)
    - Channel 0 (CH0) of ADC is connected to middle terminal of LDR and resistor

- DC Motor and Relay Module Connections:
    - Output of relay to one terminal of DC motor
    - Other terminal of DC motor to ground
    - First terminal of relay connected to DC supply 12v
    - Second terminal to ground
    - Set the operating voltage to 5v
    - Relay default pin to GPIO24 pin of raspberry Pi

- LED module (red LED) Connections:
    - One terminal is connected to GPIO12 of raspberry pi
    - The other terminal is connected to ground

- Programming the Home automation system schematic circuit – Using the required libraries and functions to define the working and conditional parameters for the connected devices.

- Evaluation of final system simulation model –Run the simulation to test the working of the Automation system on different cases

CHAPTER 5

IMPLEMENTATION AND TESTING

- To start the simulation ,click on the run button at bottom left of the simulation software window.
- Once the simulation starts, an initial message is displayed on the LCD.
- At First, the gas sensor input is taken by the RaspberryPi.
- In the case of Fire or gas leakage ,the Logic state of the gas sensor is set to 1.
- The gas sensor sends a High Voltage pulse to the raspberry pi on detection of any smoke or gas.
- On receiving the input from the gas sensor ,the raspberrypi triggers the alarm buzzer by sending an voltage and the raspberry pi sends an alert message using GSM module to the specified host number (This is displayed on the virtual terminal)
- During this phase only a respective message is displayed on LCD and rest of the components are disabled irrespective of the person's presence.
- If there is no gas detected, then the motion sensor input is taken by the RaspberryPi.
- PIR motion sensor detects the presence of a human based on passive infrared rays emitted from the living body (Heat Rays).
- It has two nodes with same reading initially. On detection of any presence, the difference between the nodes is observed which indicates human presence.
- When PIR Motion sensor's logic state is set to 1 (person detected), it sends a high pulse to the Raspberry Pi. If Logic state is set to 0 then the default low pulse continues.
- Once the person is detected, the light intensity reading of the room is taken using the LDR sensor. The analog signal from the sensor is sent as input to the ADC module and is converted to digital output and the digital pulse is sent to the raspberry pi .
- The Intensity of light can be changed by adjusting the distance between the light source(lamp) and the LDR Sensor.
- After receiving the digital pulse, the values are tallied with the preset values. If the Light intensity is less than the pre-set value then a high pulse (1.7-2.0v) is sent to the light bulb to turn it ON or else the bulb continues to stay in OFF mode.

- The Light intensity reading and State of the Bulb are displayed on the LCD screen.
- Next, the temperature input from the LM35 temperature sensor is taken by the Raspberrypi.
- Similar to LDR sensor, the output voltage signal from the LM35 temperature sensor is converted to digital output by the ADC module and sent to the raspberry pi.
- The temperature value is tallied with the pre-set value of room temperature. If the reading is above the pre-set value , a high pulse(5v) is sent to relay switch and the DC motor circuit is completed and the Dc motor starts to rotate.
- If the temperature reading falls within pre-set value then, the relay disconnects resulting in an open circuit and the motor turns off.
- The temperature readings can be changed using the virtual nobs of the sensor.
- The temperature reading and the Motor status are displayed on the LCD screen.
- In other case, if PIR sensor Logic state is set to 0 (person not detected), then the readings from the sensors (both LDR and LM35) are not read and the low pulse signal continues to LED ,DC motor keeping them in passive (off) state.
- Only a message of the case (person not detected) is displayed on the LCD screen.
- This whole process takes place in a single interation.
- The whole system design continuously runs the process as along as it is supplied with power.
- Any changes taking place during the process are registered at every iteration and are effective From the next iteration.

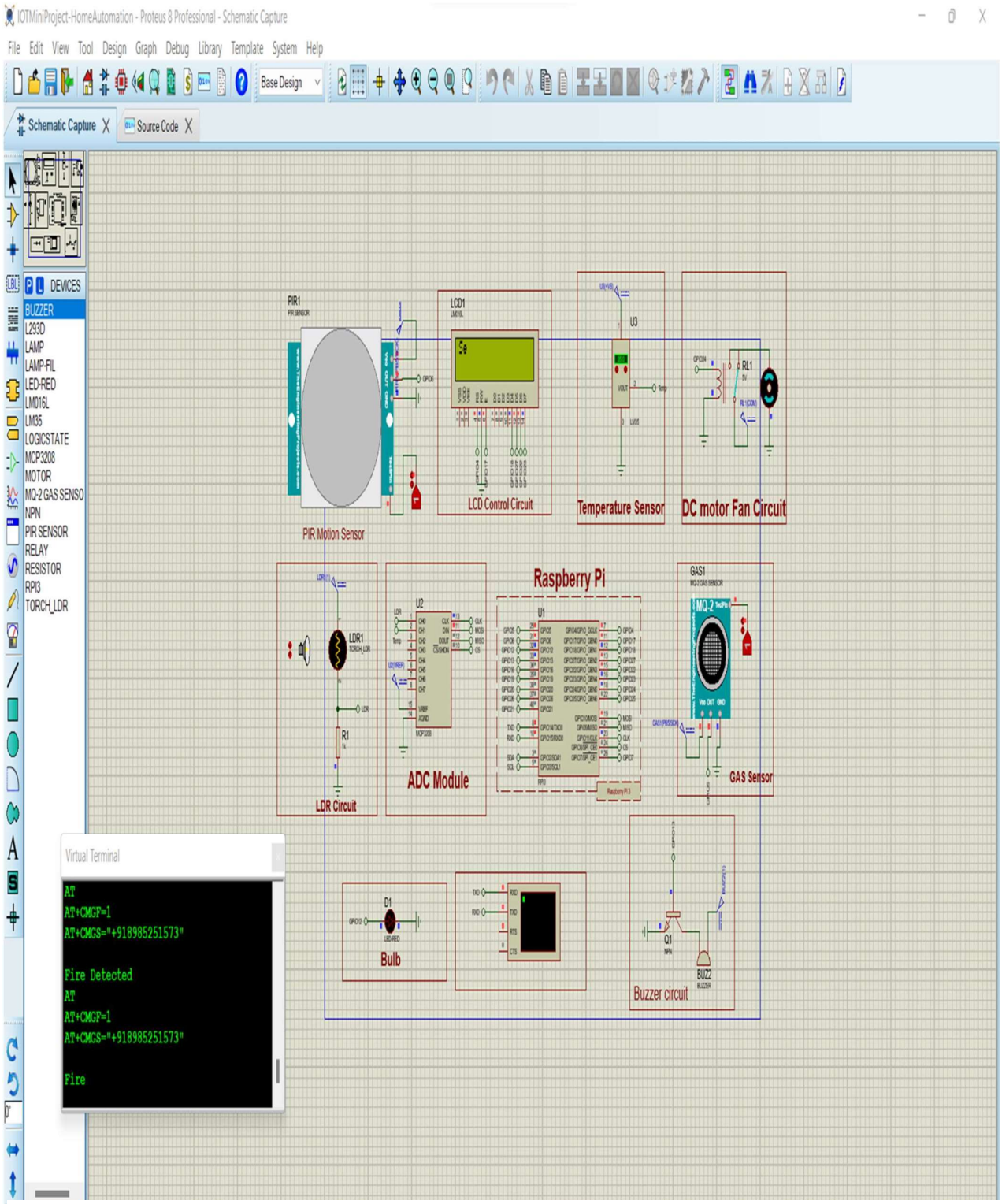

Figure 5.1 Screenshot of proteus working simulation window

CHAPTER 6

CONCLUSION & FUTURE SCOPE

Conclusion

- The overall objective of the simulation is to develop a low-cost embedded home automation system that works efficiently depending on the specified conditions of home environment.

- The simulated system is flexible and programmable, working efficiently under different circumstances and has wide range of applications and supports wide variety of peripherals and accessories to work with.
- Home Automation is the most trending technology currently. This form of technology includes a lot of prospects from a lot of topics or subject assembled together. Home automation here has almost brought a evolutionary change in handling or operating home appliances and equipments and made it easy and convenient to use home appliance

Future Scope

- The proposed system can be improved by using camera module for surveillance, IR module to control and operate home appliances such as Television, Air conditioner etc.

- As an extension, this work can be carried forward by integrating relays to Raspberry pi board for controlling home appliances from a remote location in a real scenario using smart devices.
- In addition to checking the status of home appliances, we can also control the status of the home appliances.
- Making home appliances less energy will enable this work to go even further. The smart home can be accessed remotely utilizing IOT connectivity by a technology that uses little energy.
- The various future applications may be used by controlling various household devices of house with internet.

REFERENCES

[1] A.Alheraish, "Design and Implementation of Home Automation System",2020, IEEE Transactions on Consumer Electronics, Vol 50(4), pp. 1087-1092

[2] "Intro to Home Automation System" Available: https: // www.ijert. org/ research/ home-Automation-system

[3] "Applications of Home Automation System" Available:http://www.elprocus.com/home-automation-system-applications

[4] Manas Singh, "IOT based Home Automation System using Raspberry Pi" Available:https://www.ijert.org/iot-based-smart-home-automation-system

[5] "Spidev library Description" Available: https://pypi.org/project/spidev/

[6] Neha Malik, Yogita Bodwade, "Literature Review on Home Automation System " Available: https://ijarcce.com/upload/2017/march-17/IJARCCE%20173.pdf

[7] V. Diwakar, P. Jagadeesh"Challenges of existing Home Automation System" Available: https://acadpubl.eu/hub/2018-119-17/4/457.pdf

[8] "Smart Energy Efficient Home Automation System using IOT" , by Satyendra K. Vishwakarma, Prashant Upadhyaya, Babita Kumari, Arun Kumar Mishra.

[9] "IOT Based Smart Security and Home Automation" , by Shardha Somani, Parikshit Solunke, Shaunak Oke, Parth Medhi, Prof. P. P. Laturkar.

[10] "A Dynamic Distributed Energy Management Algorithm of Home Sensor Network for Home Automation System", by Tui-Yi Yang, Chu-Sing Yang, Tien-Wen Sung

[11] "Enhance Smart Home Automation System based on Internet of Things", by Tushar Churasia and Prashant Kumar Jain.

[12] "Visual Machine Intelligence for Home Automation", by Suraj, Ish Kool,Dharmendra Kumar, Shovan Barman