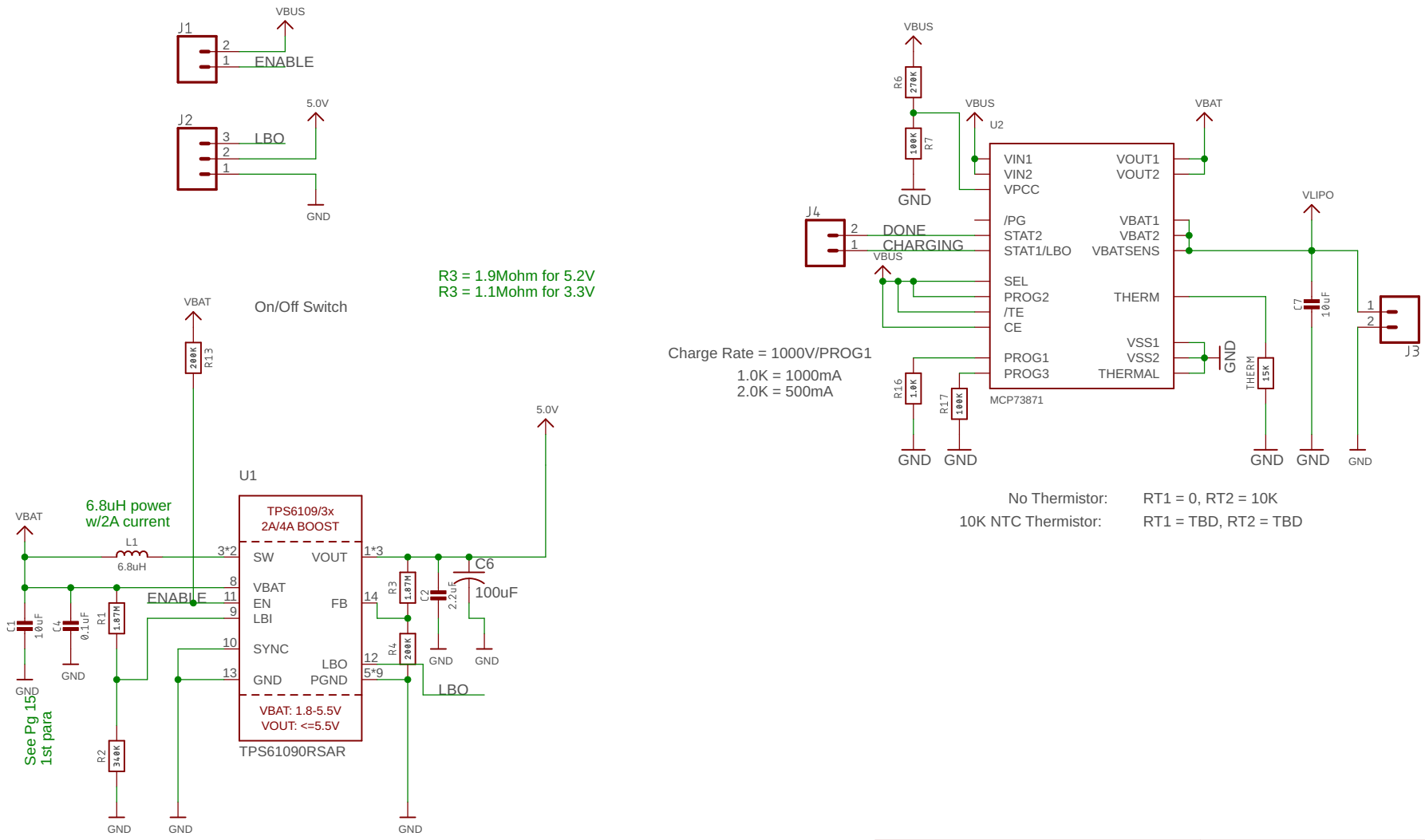

Both grounds must be connected on the PCB at only one point close to the GND pin.

PowerCastel

8/10/2018 11:24 PM

Sheet: 1/1