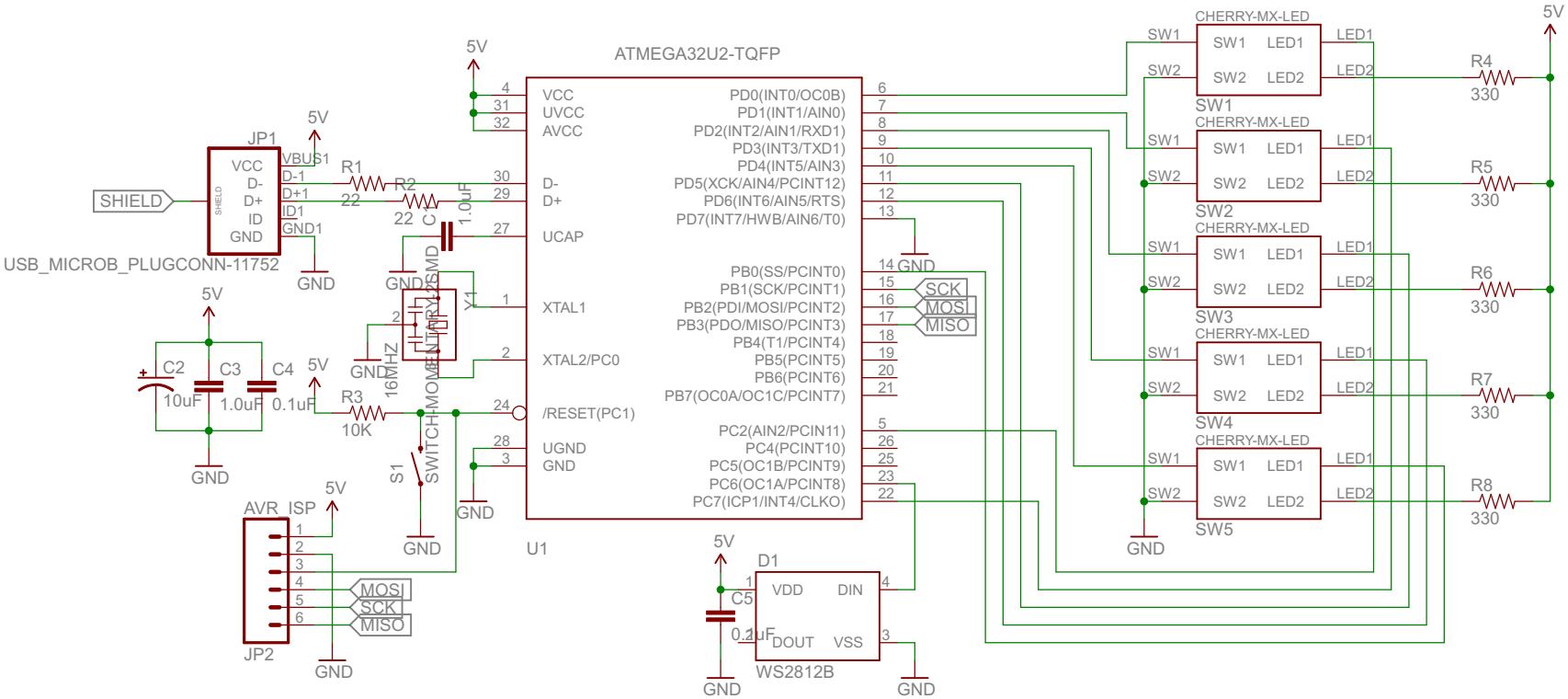

Noukensha	
Staryu_v1.3	
2015/04/28 19:36:53	Kai Ryu
Sheet: 1/1	Rev:1.3