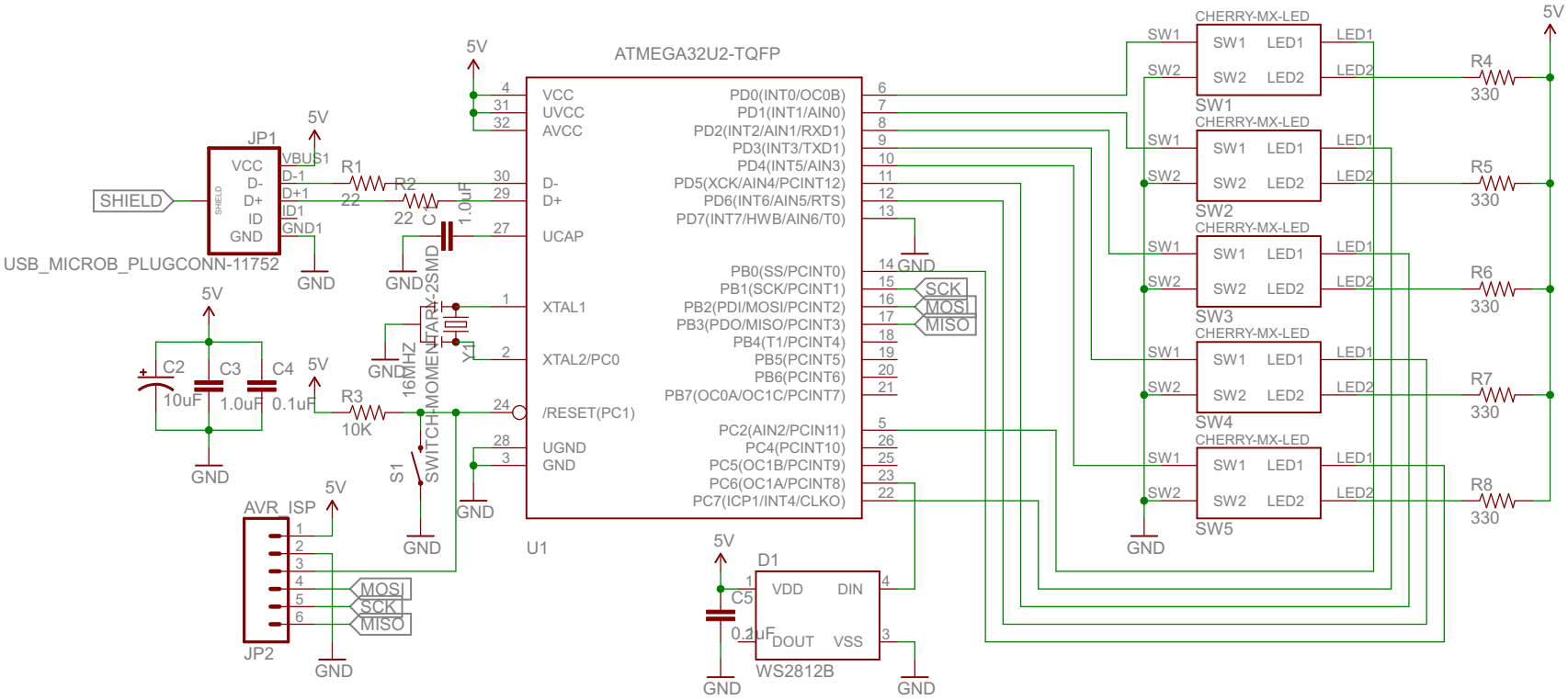

Noukensha	
Staryu_v1.2	
2015/04/07 13:55:29	Kai Ryu
Sheet: 1/1	Rev:1.2