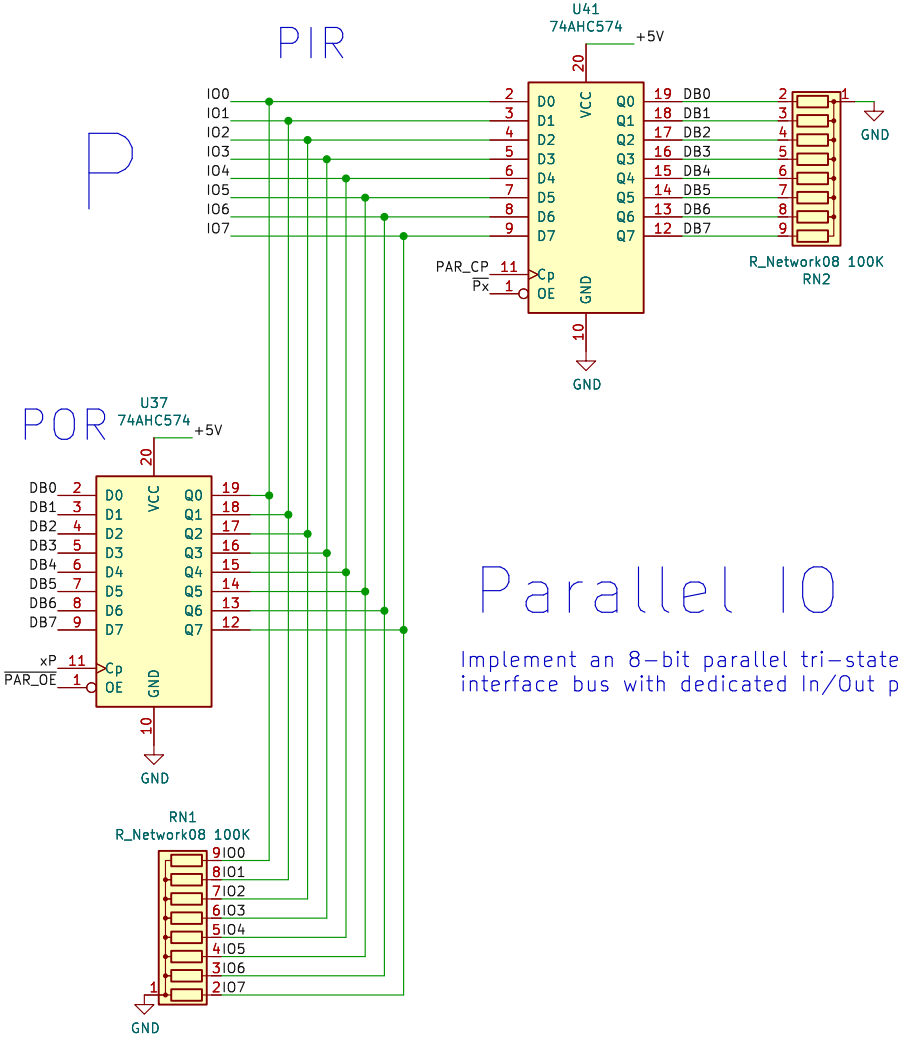
PIR
P
U41
74AHC574
+5V
20
I00
I01
I02
I03
I04
I05
I06
I07
D0
D1
D2
D3
D4
D5
D6
D7
VCC
Q0
Q1
Q2
Q3
Q4
Q5
Q6
Q7
DB0
DB1
DB2
DB3
DB4
DB5
DB6
DB7
PAR_CP
Px
Cp
OE
GND
10
R_Network08 100K
RN2
POR
U37
74AHC574
xP
PAR_OE
RN1
R_Network08 100K
Parallel IO
Implement an 8-bit parallel tri-state
interface bus with dedicated In/Out ports