DiffRefSeg: Diffusion-Guided Few-Shot Brain Tumor Segmentation via Reference Structure Fusion and Global Structural Attention

Hancang Mi
School of AI and Advanced Computing
Xi'an Jiaotong – Liverpool University
Suzhou, China
Hancang.Mi22@student.xjtlu.edu.cn

Hong Seng Gan*
School of AI and Advanced Computing
Xi'an Jiaotong – Liverpool University
Suzhou, China
HongSeng.Gan@xjtlu.edu.cn

Dong Ma
School of AI and Advanced Computing
Xi'an Jiaotong – Liverpool University
Suzhou, China
Dong.Ma22@student.xjtlu.edu.cn

Muhammad Hanif Ramlee
Dept of Biomedical Engineering and Health Science
Universiti Teknologi Malaysia
Johor Bahru, Malaysia
Muhammad.hanif.ramlee@biomedical.utm.my

Wan Mahani HafizahWan Mahmud
Dept. of Electronic Engineering
Universiti Tun Hussein Onn Malaysia
Batu Pahat, Malaysia
wanmahani@uthm.edu.my

***Abstract*— Segmentation in medical imaging is crucial for both diagnostic and therapeutic applications. However, it remains a significant challenge under limited annotation conditions. This difficulty is further intensified in multi-modal and heterogeneous clinical environments, where data availability and cross-modal consistency are often constrained. Few-shot segmentation (FSS) methods present a promising solution by learning from a small number of annotated examples. Nevertheless, most existing models assume intra-modal consistency and lack sufficient structural reasoning capabilities, especially in cross-modality scenarios. To overcome these limitations, we propose a coarse-to-fine few-shot segmentation pipeline that integrates a Reference Structure Fusion (RSF) module and a Global Compressed Structural Attention (GCSA) mechanism within a diffusion-based refinement backbone. Specifically, our pipeline first generates an initial coarse segmentation mask from one MRI modality. This coarse mask is then iteratively refined by a denoising diffusion probabilistic model (DDPM)-based segmentation head, guided by fused multi-modal features and structural priors from the multi-stage support-query RSF module. Additionally, we introduce GCSA to ensure global structural consistency by aligning semantic regions between the query and reference images. We evaluate the model on the BraTS2021 brain tumor dataset, which includes four MRI sequences (T1, T1ce, T2, FLAIR), and on other benchmarks to validate its effectiveness. Experimental results demonstrate that our framework achieves significant performance gains, with a Dice score of 88.31% and an mIoU of 90.93% on BraTS2021, outperforming state-of-the-art methods by approximately 7%. These improvements validate the robustness and generalization capabilities of our approach across diverse and low-sample segmentation scenarios.**

Key words—reference fusion, few-shot, multimodal, diffusion, medical Image Segmentation

I. Introduction

Few-shot segmentation (FSS) has emerged as a vital technique in medical imaging, particularly for scenarios with limited annotations. In many clinical applications, obtaining large labeled datasets is challenging due to the high cost and specialized expertise required for manual delineation [1]. FSS addresses this issue by enabling models to learn how to segment new anatomical structures or lesions using only a small number of labeled examples.

However, deploying FSS in medical imaging presents unique challenges. Two core issues persist in existing approaches: multimodal maladaptation and reference fusion instability [2][3]. Multimodal maladaptation refers to the difficulty segmentation models face when generalizing across different imaging modalities or sequences [4]. A model trained on one modality often struggles to perform effectively when the query image originates from another modality due to distribution shifts in intensity and texture. Most current few-shot methods assume that the training and testing images belong to the same modality or share a similar distribution; when this assumption is violated, segmentation performance can deteriorate significantly [5]. Reference fusion instability arises from how FSS methods integrate information from support examples into the query image. Typically, these frameworks fuse reference features, derived from the support image and its corresponding mask, with query features to guide the segmentation. If the reference is poorly matched to the query, or if multiple references convey conflicting information, the fusion process can introduce noise and compromise segmentation accuracy. This instability is further amplified in multimodal settings, where discrepancies in image appearance can cause the model to focus on irrelevant features, ultimately leading to incorrect segmentations.

Due to these challenges, existing FSS methods often fall short in multimodal and structurally variant scenarios. Many previous studies are limited to single-modality experiments and are not well-equipped to handle cross-modality cases or significant anatomical variations. These approaches typically rely on pixel-wise matching between support and query features, but they rarely incorporate mechanisms to enforce higher-level structural consistency. As a result, when the target organ or lesion in the query image differs in shape, size, or surrounding context from those in the support set, the resulting segmentation may become inconsistent or anatomically implausible. This highlights a clear need for methods that can maintain robust performance across imaging modalities while preserving the structural integrity of segmented regions, even in the presence of appearance variability.

In this work, we propose a novel multimodal FSS method that addresses existing limitations through a diffusion-based

XXX-X-XXXX-XXXX-X/XX/$XX.00 ©20XX IEEE

optimization process and structural prior guidance. Our approach utilizes a diffusion model to iteratively refine an initial coarse segmentation, guided by reference information in a manner that preserves anatomical structure. By incorporating structural priors into the refinement loop, the method ensures that each denoising step conforms to anatomically plausible shapes of the target object. Additionally, we introduce a Global Compressed Structural Attention (GCSA) module designed to capture long-range dependencies and enforce global consistency in the segmentation mask. This module compresses structural information from the entire image, enabling more accurate alignment of the segmented region with expected global anatomy. The proposed framework integrates these components into the few-shot training paradigm, resulting in a model that generalizes effectively across diverse imaging modalities and anatomical variations, while maintaining a low runtime memory footprint.

The main contributions of this paper are summarized as follows:

- We propose a novel Reference Structure Fusion (RSF) mechanism that preserves structural prior information while iteratively optimizing the coarse segmentation mask. By incorporating reference annotations as bootstrap information at each diffusion step, the model can refine the query segmentation results with improved stability and accuracy.
- We propose a novel attention module that enhances the global structural consistency of segmentations. The GCSA mechanism captures holistic contextual information and ensures that the predicted segmentation aligns with the overall anatomical structure, effectively addressing shape inconsistencies commonly observed in few-shot scenarios.
- We efficiently integrate the RSF and GCSA modules into the diffusion-based segmentation architecture. The resulting method achieves consistent performance across multiple imaging modalities while maintaining low memory usage at runtime, making it well-suited for deployment in diverse clinical settings.

II. Related Work

A. Reference-Guided Segmentation

Reference-guided segmentation has emerged as a promising approach for addressing the challenge of segmenting novel or ambiguous targets by leveraging one or more reference examples. In this paradigm, models use a reference image or mask to guide the delineation of corresponding structures in a new image, thereby reducing dependence on large-scale annotated datasets. This strategy is particularly valuable in medical imaging, where acquiring extensive labeled data is often difficult and anatomical variability is high. Recent studies have demonstrated the effectiveness of reference guidance in improving segmentation performance. EEC [6] introduced a reference-based interactive framework to resolve ambiguity in user-guided segmentation. Given a reference image with annotated target structures, EEC optimizes segmentation to align with the reference, significantly reducing the number of user clicks required for accurate results. Taking a different approach, Iris [7] proposed an in-context learning framework for universal medical segmentation using reference image-label pairs instead of conventional model fine-tuning. Iris encodes a small set of annotated examples into a context embedding that guides the segmentation of new targets, enabling flexible adaptation to previously unseen anatomies without additional training. Another notable contribution is Segment Any Tissue (SAT) by Liu et al. [8], which adapts the general-purpose Segment Anything Model (SAM) for medical imaging using only a single annotated reference per class. These advancements underscore that even a single, well-selected example can provide rich semantic cues to guide accurate and generalizable segmentation.

However, current reference-guided methods still face several limitations. These models may struggle when the reference example is not truly representative or when the appearance of the target structure differs significantly from that of the reference. Approaches like SAT and RefCut depend on powerful pretrained backbones (e.g., SAM) and may inherit domain-specific biases from these models. Additionally, selecting an appropriate reference is a non-trivial task, irrelevant or low-quality references can mislead the segmentation process and degrade performance. Further research is needed to automate the reference selection process and enhance reference information, for example, by incorporating multiple examples or utilizing multi-modal references to improve robustness. Despite these challenges, reference-guided segmentation remains a promising direction for reducing annotation effort and effectively handling novel or variable structures in medical imaging.

B. Few-Shot Learning in Medical Image Segmentation

Few-shot learning techniques aim to achieve accurate segmentation using only a small number of annotated examples for a new class or imaging scenario. The significance of FSS lies in its ability to drastically reduce the annotation burden and to handle rare conditions or uncommon imaging modalities that lack large, curated datasets. In recent years, researchers have proposed specialized approaches to enhance FSS performance in the medical domain. One effective strategy involves learning high-quality prototypes of target structures from the limited training examples. For instance, Tang et al. [9] introduced DSPNet, which constructs detail self-refined prototypes for both foreground and background regions to guide the segmentation of query images. Another promising direction focuses on the intelligent selection and utilization of the most informative support examples. MatchSeg [10] incorporates a CLIP-based image retrieval mechanism to select support images that are highly relevant to the query and then applies a joint attention module to facilitate knowledge transfer between support and query features. This approach demonstrated superior segmentation accuracy and domain generalization across four public datasets, highlighting that aligning support-query pairs based on content can significantly enhance few-shot learning. These findings support the feasibility of rapidly updating surgical site segmentations with minimal annotated data.

Despite recent advances, FSS in medical imaging still faces several limitations. Many existing methods rely on the availability of a large, related dataset for meta-training or pretraining, which may not be feasible for highly novel or rare tasks. Furthermore, model performance can be highly sensitive to the selection of support examples, outlier or poorly matched cases can significantly degrade segmentation accuracy. Additionally, current few-shot models often struggle to handle complex 3D anatomical structures or

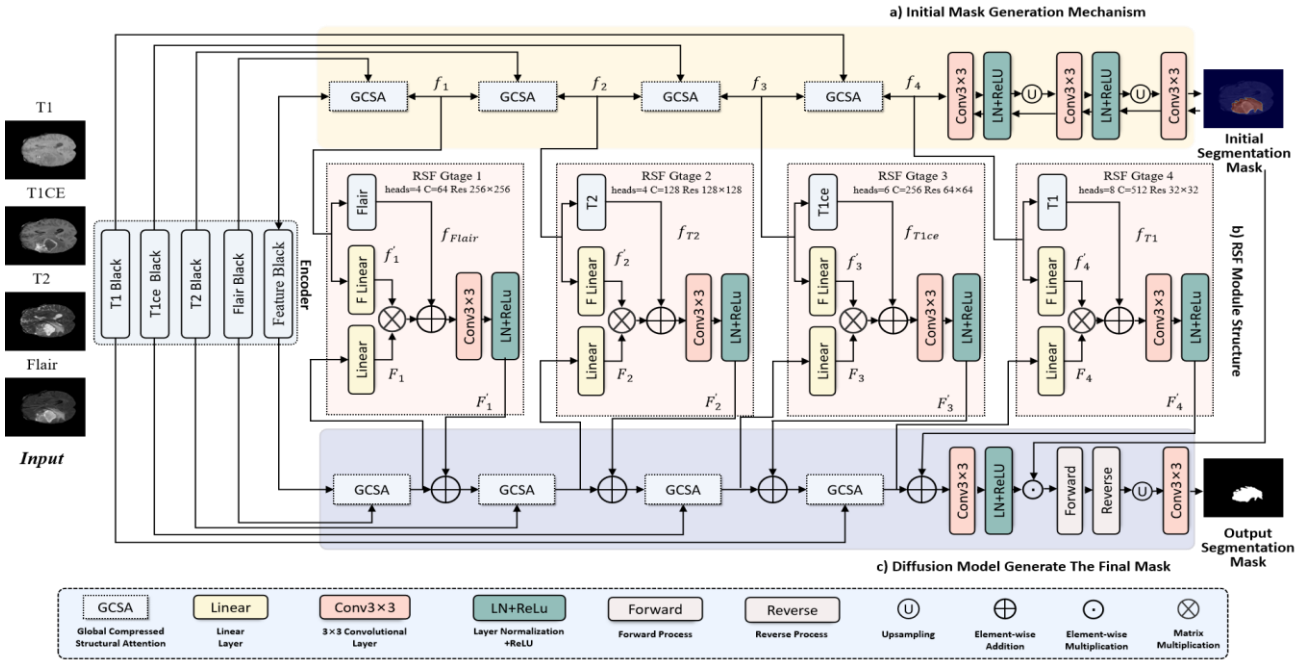

Fig. 1. Schematic diagram of the overall model architecture. The model architecture is divided into three parts: part (a), (b) and (c). Among them, part (a) is the initial mask segmentation generator, which performs segmentation according to a single modality, part (b) is the Reference Structural Fusion (RSF) module process, and part (c) is the diffusion model backbone, which is responsible for generating the final segmentation results. In the generation process, the four modalities of the original image are input to the Encoder and the feature information according to the different modalities is passed into the diffusion backbone in part (c) via the RSF module in part (b). And the initial mask obtained from the coarse segmentation is passed into the diffusion, and the initial results are gradually corrected to the real data.

perform multi-class segmentation when only a limited number of annotated examples are available.

C. *Diffusion Models for Segmentation*

In segmentation, diffusion probabilistic models provide a generative framework for producing or refining masks, integrating multi-modal information, and enhancing label quality in data-scarce settings. Their value lies in the ability to leverage extensive unsupervised or weakly supervised training, thereby improving downstream segmentation performance, particularly in medical scenarios where annotated data is limited. Unlike conventional discriminative models, diffusion-based approaches inherently support data generation and uncertainty modeling within the segmentation pipeline. This capability is especially beneficial for capturing anatomical variability and refining predictions with greater robustness. For example, TextDiff [11] leverages a text-guided diffusion model to learn robust semantic representations from limited segmentation masks combined with readily available radiology reports. By aligning diffusion latent features with textual descriptions of abnormalities, TextDiff significantly improved segmentation accuracy on COVID-19 chest CT scans and gland histology images, using only a small number of labeled examples. Building on this concept, Chen et al. [12] proposed ERSegDiff, which employs a diffusion model to post-process initial segmentation outputs and enhance object boundary sharpness. In addition, diffusion-based data augmentation techniques have also shown promise. For instance, Qiu et al. [13] introduced Siamese-Diffusion, a model designed to generate synthetic image–mask pairs to augment training datasets and improve downstream segmentation performance

Despite these successes, several challenges remain. Pure diffusion-based segmentation models, such as ERSegDiff, can be computationally intensive and typically lag behind discriminative models in terms of inference speed. Additionally, approaches like TextDiff still depend on a limited amount of labeled data, and their performance may degrade when applied to data distributions that differ from those seen during training. Overall, diffusion models represent a promising new frontier in medical image segmentation, offering the potential to enhance data efficiency and prediction quality. However, further research is necessary to translate their theoretical advantages into consistent, practical improvements across diverse clinical applications.

III. Methodology

We propose a coarse-to-fine few-shot segmentation framework that integrates an initial coarse mask prediction, a reference-guided few-shot fusion module, and a diffusion-based refinement backbone (Figure 1). The full architecture (Figure 1) is composed of three interconnected components. In the forward pass, the multi-modal MRI slices (T1, T1ce, T2, FLAIR) of a query patient are first encoded into a set of feature maps. A preliminary segmentation is obtained from one modality as a coarse mask. Simultaneously, features from the query and a small support set of annotated examples are combined through the RSF module to produce a fused structural prior. The diffusion model then takes the coarse mask and the fused prior as conditions and generates the final segmentation through iterative refinement.

A. *Coarse Mask Generation and Modality Feature Extraction*

To kick-start the segmentation, we employ a lightweight coarse mask generator that operates on a single informative modality. This coarse mask serves as an initial guess of the target region's shape. In parallel, we extract features from all four MRI modalities using a multi-modal encoder. Each modality (T1, T1ce, T2, FLAIR) is processed through a

dedicated encoder block (sharing a common architecture but separate weights) to capture modality-specific features. The encoder produces a hierarchy of feature maps at multiple resolutions: f_1, f_2, f_3, f_4, where f_1 is high-resolution and f_4 is low-resolution. At each resolution stage, features from the different modalities are concatenated or fused to form a joint representation F_i that combines complementary information.

The initial mask M_{coarse} is not only a segmentation output by itself, but is also converted into a feedback feature that is fed forward into the refinement process. In practice, is appended as an additional channel to the input of the diffusion model to inform subsequent refinement stages. This feedback feature provides a spatial prior and it highlights approximate regions of interest which helps the downstream model focus on relevant areas. By reusing the coarse prediction as a condition for refinement, the network is encouraged to preserve correct regions from the start while concentrating its efforts on correcting errors and refining boundaries.

B. Few-Shot Learning Module

The few-shot module (Figure 1b) leverages one or more support examples (reference images with masks) to guide the segmentation of the query image. Our pipeline follows a multi-stage support-query interaction design: we introduce Reference Structure Fusion (RSF) that progressively integrate structural information from the support into the query features. Each stage operates at a different feature resolution, mirroring the encoder's feature pyramid. At each RSF stage, the query's feature map interacts with the support's feature map through an attention-based fusion mechanism. The support feature map is obtained by feeding the support image through a similar encoder, and masking it to include only the region of interest. By masking, we isolate the reference structure features, those corresponding to the anatomy of interest in the support.

We also incorporate Reference-Query Attention suitable for RSF in the small-sample learning module fusing relevant information through a cross-attention mechanism between the query and supporting features. We project the query and support feature maps into a common embedding space using learned linear mappings (denoted as W_Q, W_K, W_V for query, key, and value). We compute an attention weight matrix α that links each query location p with support locations q based on feature similarity:

$$\alpha_{p,q}^{(i)} = \frac{\exp(\langle Q_i(p), K_i(q)\rangle)}{\sum_{q'} \exp(\langle Q_i(p), K_i(q')\rangle)} \tag{1}$$

These normalized weights $\alpha_{p,q}^{(i)}$ indicate how well query position p matches support position q (in terms of learned feature content). The query feature at p is then updated by aggregating support values V_i weighted by this attention:

$$F_{i,fused}(p) = F_i(p) + \sum_q \alpha_{p,q}^{(i)} V_i(q) \tag{2}$$

Here $F_{i,fused}$ is the output of the RSF stage i, a fused feature map that carries query information enriched with aligned support context. We employ multi-head attention in this process (with a small number of heads per stage, e.g. 4 or 6 heads), which allows the model to attend to multiple aspects of the reference structure simultaneously. A lightweight 3×3 convolution and normalization then mixes the fused features and ensures they are propagated stably to the next stage. This stage-wise fusion (RSF Stage 1 through 4) progressively injects higher-level structural cues from the support: early stages integrate fine details, while later stages incorporate coarse semantic guidance. By the final RSF stage, the query feature map $F_{4,fused}$ contains a rich prior that reflects the reference anatomy in the context of the query image.

C. Diffusion-Based Refinement Backbone

After obtaining the fused multi-modal prior features and the coarse mask, the final stage of our method uses a denoising diffusion probabilistic model (DDPM) to refine the segmentation. We integrate the outputs of the RSF module and the coarse mask as conditions into this model so that the diffusion process is guided towards anatomically plausible and reference-consistent outputs. We adopt the standard DDPM formulation for mask generation. Let y be the ground-truth segmentation mask (in a continuous or one-hot representation) for a given query slice.

The forward diffusion process begins with the initial segmentation mask x_0 and progressively adds Gaussian noise at each time step t, resulting in a noisy mask state x_t.

$$q(x_t|x_{t-1}) = N(x_t; \sqrt{1-\beta_t} x_{t-1}, \beta_t I) \tag{3}$$

As shown in Equation (3), given a predefined noise schedule β_t, the forward diffusion process is modeled as a Markov chain, where each state x_t is generated by randomly perturbing the previous state x_{t-1}. After T steps of noise injection, the mask converges to a pure noise distribution, which serves as the training supervision for the subsequent reverse denoising process.

The diffusion module then learns a parametric model p_θ to approximate the reverse diffusion, aiming to reconstruct a cleaner mask x_{t-1} from the noisy input x_t. This inverse diffusion process denoises the mask progressively over T steps, gradually transforming the noise distribution back into an accurate target segmentation mask.

$$p_\theta(x_{t-1}|x_t = N(x_{t-1}; \mu_\theta(x_t, t), \Sigma_\theta(x_t, t)) \tag{4}$$

As shown in Equation (4), at each time step t, the model p_θ predicts the mean $\mu_\theta(x_t, t)$ and variance $\Sigma_\theta(x_t, t)$ of a Gaussian distribution, from which x_{t-1} is sampled based on the current noisy state x_t. Through this step-by-step refinement, the diffusion module effectively corrects errors in the initial mask, resulting in a more accurate and smoother final segmentation output.

D. Global Compressed Structural Attention (GCSA) and Training Strategy

As demonstrated in Fig. 2, in order to enhance the feature fusion effect and ensure the global consistency of the segmentation results, we propose Global Compressed Structural Attention (GCSA) to replace the traditional multi-scale splicing fusion method. The GCSA module takes the features generated by the encoder based on the information of

the different modalities with the fusion reference prior as input and output attention-enhanced feature map. The core idea is to compress the global structural information in the reference and use it to modulate the activation of the query features. In practice, GCSA performs a form of squeeze-and-excitation attention across the spatial dimensions of the feature map. For a given feature map F, we use the vector g to generalise the presence of the target structure across the

slice. Subsequently, we process g through a small bottleneck network containing two fully connected 'linear' layers and a

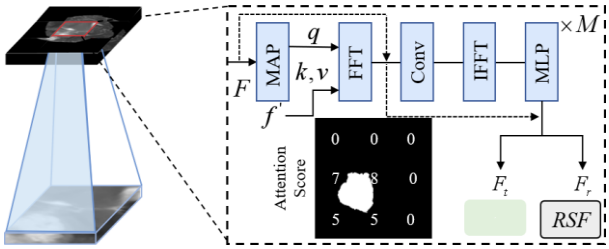

Fig. 2. Schematic of the GCSA module. The attention score falls within the MAP. And the final output F_t goes into the back propagation process and F_r goes into the RSF module

ReLU activation function to generate an attention weight vector w of the same length as g:

$$w = \sigma(W_2 \mathrm{ReLU}(W_1 g)) \tag{5}$$

Where W_1 and W_2 are learnable matrices and σ is the sigmoid function producing weights in [0,1]. The weight w_c (the c-th element of w) reflects the global importance of channel c in representing the structure.

For the Few-shot segmentation task, we employ a unified training strategy that ensures consistency across diverse tasks. All model parameters are shared among these tasks, enabling the network to generalize across segmentation problems involving various modalities and anatomical structures within a single training process. This parameter-sharing approach requires a balanced optimization strategy to prevent any individual task from dominating the learning process or causing catastrophic forgetting. Furthermore, given the limited availability of training samples per task in a few-shot setting, we replicate this constraint by carefully designing episodic training scenarios that reflect real-world small-sample conditions episode approach (reference-query pairs), where a small number of reference and query pairs are sampled from different tasks for training in each iteration.

IV. Results

A. Experimental Setup

We evaluate our method on four benchmark MRI segmentation datasets: BraTS 2019 [14], BraTS 2020 [15], BraTS 2021 [16], and OASIS [17]. Each dataset is used in a separate training-testing experiment, with no data fusion between them. The BraTS datasets consist of multi-modal MRI scans of brain tumors (four modalities: T1, T1ce, FLAIR, and T2) accompanied by expert annotations of tumor subregions. Following standard practice, we focus on 2D slices in the axial plane that contain tumor tissue, specifically, slices 70–124 from each 3D volume, where the probability of tumor presence is highest. Importantly, we treat each dataset independently, simulating a few-shot learning scenario in which only a small number of samples from each dataset are available for training, with no pre-training on large external datasets. This setup evaluates the model's adaptability and robustness across different MRI modalities and segmentation targets.

We employ two standard segmentation metrics to evaluate performance: the Dice Similarity Coefficient (DSC) and the mean Intersection over Union (mIoU).

$$\mathrm{DICE} = \frac{2 \times \mathrm{TP}}{2 \times \mathrm{TP} + \mathrm{FP} + \mathrm{FN}} \tag{6}$$

$$\mathrm{IoU} = \frac{\mathrm{TP}}{\mathrm{TP} + \mathrm{FP} + \mathrm{FN}} \tag{7}$$

$$d_H(X, Y) = \max\{d_{XY}, d_{YX}\} = \max\{\max_{x \in X} \min_{y \in Y} d(x, y), \max_{y \in Y} \min_{x \in X} d(x, y)\} \tag{8}$$

The DSC measures the overlap between the predicted mask S and the ground truth mask, yielding a value of 1.0 for perfect overlap and 0 for no overlap. The mIoU represents the IoU averaged across all segmentation classes. For training, we use a PyTorch implementation of our model. All BraTS and OASIS experiments are conducted on images that are resampled and cropped to a resolution of 512×512. The model is trained from scratch on each dataset in a few-shot setting using a small training set, for 300 epochs with a batch size of 16. The diffusion process utilizes 1000 timesteps. We employ the Adam optimizer with a learning rate of 0.001 and apply early stopping when the validation performance plateaus. Training is accelerated using a pair of NVIDIA A40 GPUs and completes in approximately 10 hours per dataset.

B. Quantitative Evaluation

Table 1 summarizes the segmentation accuracy of our approach compared to several state-of-the-art baselines across multiple datasets. In this study, a comparative analysis is conducted on the generic medical macro models MedSAM [18] and UniverSeg [19] models, along with other state-of-the-art models in brain tumour segmentation, including CLISC [20], MUNet [21], EA-ResUNet [22] and MWG-UNet+ [23].The classical U-Net [24], nnU-Net [25], TransUNet [26] and MedSegDiff-v2[27] models are also deployed and compared. Overall, our method demonstrates competitive Dice and mIoU scores, highlighting strong and consistent performance across diverse settings. For instance, on the BraTS2020 dataset, our model achieves a Dice score of approximately 85.8% and an mIoU of around 89.3%. On BraTS2019, our approach reaches a Dice score of about 81.2%, outperforming both TransUNet and nnU-Net. For BraTS2021, the model achieves 90.31% Dice and 93.93% mIoU, indicating superior performance compared to mainstream baseline models when trained under the same conditions. Crucially, our method demonstrates strong performance in the OASIS evaluation, which presents a distinct segmentation challenge involving brain anatomy without tumors. Baseline models not specifically adapted to this distribution experienced notable performance degradation. For example, nnU-Net achieved only a 71.6% Dice score on OASIS, likely due to domain shift or limited training data. Similarly, TransUNet and even U-Net produced lower accuracy, often failing to capture subtle structural boundaries.

In contrast, our model maintained a Dice score of 80.2%, outperforming nnU-Net and TransUNet by approximately 8.6 percentage points. Although MedSAM achieved the highest mIoU on OASIS (83.8%), its advantage is primarily attributed to extensive pre-training. Our approach, trained with only few-shot examples, successfully closes much of this performance gap. Moreover, our method recorded the lowest HD95% scores across all experiments, indicating that the generated masks closely align with the ground truth. However, some instability was observed in our method, particularly in

TABLE I. EVALUATION ON THE BRATS20, OASIS, BRATS21, BRATS19 BRAIN TUMOUR SEGMENTATION DATASETA

Dataset	**Brats2020**			**OASIS**			**Brats2021**			**Brats2019**		
Metrics	***Dice***	***mIoU***	***HD95***	***Dice***	***mIoU***	***HD95***	***Dice***	***mIoU***	***HD95***	***Dice***	***mIoU***	***HD95***
MedSAM [18]	83.71	84.72	10.79	79.39	**83.78**	12.21	85.76	88.37	12.26	78.37	79.03	15.94
UniverSeg [19]	79.30	82.01	11.87	74.05	76.47	13.07	77.28	80.26	13.89	73.81	74.08	11.06
CLISC [20]	82.25	85.31	10.77	70.61	73.09	11.33	83.54	83.87	11.37	79.93	81.26	13.79
MUNet [21]	79.90	86.41	11.25	71.57	77.39	10.87	85.29	87.83	14.85	77.35	79.47	12.43
EA-ResUNet [22]	81.87	83.58	9.75	73.83	75.63	13.53	81.22	83.21	13.72	75.21	77.92	12.21
MWG-UNet++ [23]	82.56	79.46	15.74	73.29	75.72	11.32	87.13	86.97	10.98	77.91	79.04	13.09
Unet [24]	82.33	85.36	13.28	77.21	79.51	14.37	83.45	86.09	12.02	71.29	73.76	14.37
nnUNet [25]	76.25	79.34	12.65	71.64	73.21	13.75	81.85	85.71	15.76	70.83	71.88	12.79
TransUnet [26]	80.31	83.96	10.97	73.74	76.22	12.29	79.31	83.76	11.04	71.25	74.75	12.16
MedSegDiff-v2 [27]	81.43	84.93	9.51	79.47	82.98	10.24	85.72	87.25	11.37	76.13	78.04	11.19
DiffRefSeg (Ours)	**85.76**	**89.34**	**7.73**	**80.21**	82.17	**9.16**	**88.31**	**90.93**	**10.34**	**81.25**	**82.33**	**9.59**

[a.] Table 1 Comparison table of model training results, where the black labelled parts are the highest scores.

mIoU scores. The relatively smaller increase in mIoU suggests that higher confidence values may lead to the generation of larger masks, potentially affecting boundary precision..

C. Qualitative Evaluation

Fig. 3 presents a side-by-side visual comparison of segmentation outputs on representative slices from the BraTS and OASIS datasets. These qualitative results support the numerical findings, demonstrating that our method produces segmentations that are both more complete and more precise than those of the baseline models. In the tumor segmentation examples (a) and (c), our model effectively captures the full extent of the lesions, including small satellite tumor regions that nnU-Net and TransUNet often fail to detect. The boundaries of our predicted tumor masks are notably smoother and more anatomically plausible.

Traditional CNN models, constrained by limited global context, sometimes produce jagged or fragmented boundaries, this is evident in the TransUNet output, where some tumor edges appear irregular. In contrast, our model generates smooth, coherent segmentations that closely follow natural organ and tumor contours. This improvement is attributed to the integration of global attention mechanisms, which capture overall shape and a diffusion refinement step that removes spurious irregularities.

Another important qualitative aspect is cross-modality consistency. By simultaneously leveraging all MRI modalities in the BraTS dataset, our model avoids the modality-specific errors observed in other methods. For example (b), nnU-Net relies heavily on the contrast-enhanced T1 modality and often misses non-enhancing tumor regions that are visible only in FLAIR, resulting in gaps or holes in the predicted mask. In contrast, our model correctly includes such regions, demonstrating effective fusion of multi-modal information. Additionally, our method can match the segmentation performance of MedSAM without requiring large-scale pre-training. Despite producing visually more coherent segmentations, the edge processing in our generated masks lacks sufficient detail. This limitation may stem from the mediocre quality of the masks provided by the preliminary coarse mask generators, leading to a significant gap between the masks used by the diffusion model and the actual ground truth data.

D. Ablation Studies

Table 2 shows the comparative results of the ablation experiments. In the A-series experiments (A1–A5), we ablate each core module of DiffRefSeg to evaluate its individual contribution to the overall performance. The full model (A1), which incorporates GCSA, RSF, diffusion refinement, and the initial mask predictor, achieves the best results with a Dice score of 83.63%, an mIoU of 85.69%, and a minimal HD95 of 7.34 mm. Removing the GCSA module (A2) compromises global consistency, leading to a noticeable drop in Dice (−1.76%) and an increase in HD95 to 8.91 mm, indicating reduced shape continuity. Excluding the RSF module (A3) results in slightly better overlap metrics than A2 (Dice: 82.01%, mIoU: 83.31%) but still raises HD95 to 8.12 mm, underscoring its significance in integrating local structural details across support-query pairs.

In the A4 setting, which discards the initial coarse mask and initiates the diffusion process from scratch, the model performs worst across all evaluation criteria, achieving a Dice score of 80.13% and an HD95 of 10.25 mm. This result underscores the critical role of the initial mask as a structural anchor that guides the diffusion process; without it, the model loses spatial grounding, resulting in noisy or anatomically implausible segmentations. In contrast, A5, where the diffusion module is removed but all other components are retained, yields a slightly higher mIoU (83.45%) than A3 and A4, but fails to refine boundaries effectively, as reflected by a higher HD95 of 9.08 mm. Collectively, the A-series experiments confirm that each module global attention, reference guidance, initial segmentation, and diffusion refinement will contribute to the unique and essential functions of the overall pipeline. The removal of any single component results in significant and interpretable performance degradation.

The B-series experiments (B1–B3) examine how the number of diffusion timesteps impacts refinement quality. The default configuration (B2), which employs 1000 steps, achieves the highest overall performance with a Dice score of 83.63% and an HD95 of 7.34 mm. Reducing the number of steps to 500 (B1) results in under-refined segmentations, decreasing the Dice score to 81.98% and increasing the HD95 to 8.26 mm, indicating incomplete boundary correction. On the other hand, increasing the steps to 1500 (B3) provides a

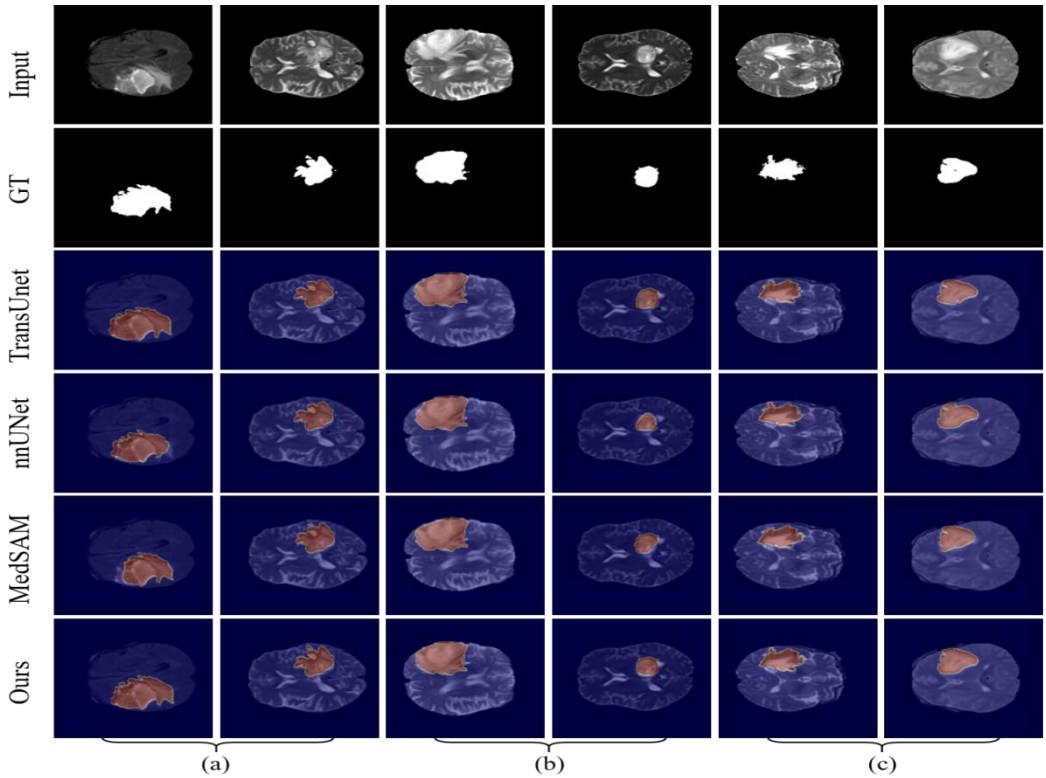

Fig. 3. Split Mask Visual Comparison Plot, we select the models with the best metrics results for a visual comparison. (a) for the mixed data sets for BraTS19 and BraTS20. (b) for the OASIS data set. (c) for the BraTS21 dataset

TABLE II. EFFECTS OF MODULE ABLATIONS (A-SERIES) AND DIFFUSION STEP VARIATIONS (B-SERIES)

Version	GCSA	RSF	Diffusion	Initial Mask	Diffusion Steps	Dice (%)	mIoU (%)	HD95 (mm)
A1/B2: Full Model	√	√	√	√	1000	**83.63**	**85.69**	**7.34**
A2: w/o GCSA	×	√	√	√	1000	81.87	82.03	8.91
A3: w/o RSF	√	×	√	√	1000	82.01	83.31	8.12
A4: w/o Initial Mask	√	√	√	×	1000	80.13	81.94	10.25
A5: w/o Diffusion	√	√	×	√	-	82.12	83.45	9.08
B1: Fewer Steps	√	√	√	√	500	81.98	83.03	8.26
B3: More Steps	√	√	√	√	1500	83.01	84.9	8.15

slight improvement over B1 in Dice (83.01%) but fails to outperform the baseline and slightly increases the HD95 to 8.15 mm. These findings suggest that while longer diffusion processes can facilitate finer reconstruction, an excessive number of steps may introduce over-smoothing or semantic drift, particularly when guided by imperfect initial masks.

In summary, the B-series experiments confirm that 1000 diffusion steps (B2) offer the most effective refinement schedule. Deviating from this optimal point in either direction leads to subtle yet measurable losses in accuracy. When considered alongside the A-series findings, these results highlight the importance of jointly tuning both the structural modules and the refinement dynamics to achieve optimal segmentation performance.

V. CONCLUSION

In this paper, we proposed a novel segmentation framework for medical imaging that achieves high accuracy with a remarkably small computational footprint and strong generalization capabilities. Unlike heavyweight foundation models, our network is lightweight and can be quickly retrained or fine-tuned for new tasks with limited data, making it well-suited for real-world deployment scenarios where memory and computational resources are constrained. This design philosophy aligns with recent efforts in medical image segmentation that emphasize efficiency, scalability, and adaptability across diverse tasks [28-30]. In future work, we shall explore the fine-grained segmentation tasks, such as delineating sub-components of tumors (e.g., edema, core, and enhancing regions) or other organ substructures, to evaluate how our modules scale to multi-class outputs.

ACKNOWLEDGEMENT

All authors acknowledge the financial support provided by the XJTLU Research Development Fund (ref: RDF-22-02-042), Academic Enhancement Fund, Center of Excellence for

Syntegrative Education (CoESE) Fund (ref: CoESE242502), TUBITAK Visiting Research Fellowships and China-BRICS Industry Ecosystem Think Tank Network Open Project.

REFERENCES

[1] W. L. Shi, P. L. Zhang, Y. Q. Li, and Z. G. Jiang, "Segment anything model for few-shot medical image segmentation with domain tuning," Complex Intell. Syst., vol. 11, no. 1, pp. 37, 14 November 2024.

[2] A. M. Alsaleh, E. Albalawi, A. Algosaibi, S. S. Albakheet, and S. B. Khan, "Few-shot learning for medical image segmentation using 3D U-Net and model-agnostic meta-learning (MAML)," Diagnostics, vol. 14, no. 12, pp. 1213, 07 June 2024.

[3] H. Liu, D. Wei, D. H. Lu, J. H. Sun, H. Zheng, Y. F. Zheng, et al., "Learning to segment multiple organs from multimodal partially labeled datasets," in *Medical Image Computing and Computer Assisted Intervention - MICCAI 2024*, Marrakesh, MA, M. G. Linguraru, Q. Dou, A. Feragen, S. Giannarou, B. Glocker, K. Lekadir, et al., Eds., 03 October 2024, Cham, ZG, CH: Springer Nature Switzerland, pp. 372-382.

[4] X. G. Zhou, Y. Y. Sun, M. Deng, W. C. W. Chu, and Q. Dou, "Robust semi-supervised multimodal medical image segmentation via cross modality collaboration," in *Medical Image Computing and Computer Assisted Intervention - MICCAI 2024*, Marrakesh, MA, M. G. Linguraru, Q. Dou, A. Feragen, S. Giannarou, B. Glocker, K. Lekadir, et al., Eds., 03 October 2024, Cham, ZG, CH: Springer Nature Switzerland, pp. 57-67.

[5] Z. Y. Zhao, F. C. Zhou, Z. Zeng, C. T. Guan, and S. K. Zhou, "Meta-hallucinator: Towards few-shot cross-modality cardiac image segmentation," in *Medical Image Computing and Computer Assisted Intervention - MICCAI 2022*, Singapore, L. W. Wang, Q. Dou, P. T. Fletcher, S. Speidel and S. Li, Eds., 16 September 2022, Cham, ZG, CH: Springer Nature Switzerland, pp. 128-139.

[6] X. C. Zhong, Q. S. Wang, D. Liu, J. X. Liao, R. Z. Yang, S. H. Duan, et al., "A deep domain adaptation framework with correlation alignment for EEG-based motor imagery classification," Comput. Biol. Med., vol. 163, pp. 107235, September 2023.

[7] Y. H. Gao, D. Liu, Z. W. Li, Y. S. Li, D. D. Chen, M. Zhou, et al., "Show and segment: Universal medical image segmentation via in-context learning," in *2025 IEEE/CVF Conference on Computer Vision and Pattern Recognition (CVPR)*, Nashville, TN, USA, 13 August 2025, New York, NY, USA: IEEE, pp. 20830-20840.

[8] X. Y. Liu, G. Z. Shi, R. Wang, Y. X. Lai, J. N. Zhang, W. X. Han, et al., "Segment Any Tissue: One-shot reference guided training-free automatic point prompting for medical image segmentation," Med. Image Anal., vol. 102, pp. 103550, 01 May 2025.

[9] S. Tang, S. X. Yan, X. Z. Qi, J. X. Gao, M. Ye, J. W. Zhang, et al., "Few-shot medical image segmentation with high-fidelity prototypes," Med. Image Anal., vol. 100, pp. 103412, February 2025.

[10] J. Y. Huo, R. Q. Xiao, H. T. Zheng, Y. Liu, S. Ourselin, and R. Sparks, "MatchSeg: Towards better segmentation via reference image matching," in *2024 IEEE International Conference on Bioinformatics and Biomedicine (BIBM)*, Lisbon, PT, 06 December 2024, New York, NY, USA: IEEE, pp. 2068-2073.

[11] C. M. Feng, "Enhancing label-efficient medical image segmentation with text-guided diffusion models," in *Medical Image Computing and Computer Assisted Intervention - MICCAI 2024*, Marrakesh, MA, M. G. Linguraru, Q. Dou, A. Feragen, S. Giannarou, B. Glocker, K. Lekadir, et al., Eds., 06 October 2024, Cham, ZG, CH: Springer Nature Switzerland, pp. 253-262.

[12] B. J. Chen, J. X. Wang, and Y. J. Zheng, "ERSegDiff: a diffusion-based model for edge reshaping in medical image segmentation," Phys. Med. Biol., vol. 69, no. 11, pp. 115007, 14 May 2024.

[13] K. P. Qiu, Z. Q. Gao, Z. Y. Zhou, M. J. Sun, and Y. X. Guo, "Noise-consistent siamese-diffusion for medical image synthesis and segmentation," in *2025 IEEE/CVF Conference on Computer Vision and Pattern Recognition (CVPR)*, Nashville, TN, USA, 13 August 2025, New York, NY, USA: IEEE, pp. 15672-15681.

[14] B. H. Menze, A. Jakab, S. Bauer, J. Kalpathy-Cramer, K. Farahani, J. Kirby, et al., "The multimodal brain tumor image segmentation benchmark (BRATS)," IEEE Trans. Med. Imaging, vol. 34, no. 10, pp. 1993-2024, 04 December 2015.

[15] S. Bakas, H. Akbari, A. Sotiras, M. Bilello, M. Rozycki, J. Kirby, et al., "The Multimodal Brain Tumor Segmentation Challenge (BraTS 2020) Dataset," 2020, Cedars-Sinai Medical Center. [Online]. Available: https://www.med.upenn.edu/cbica/brats2020/data.html.

[16] U. Baid, S. Ghodasara, S. Mohan, M. Bilello, E. Calabrese, E. Colak, et al., "The RSNA-ASNR-MICCAI brats 2021 benchmark on brain tumor segmentation and radiogenomic classification," 2021, arXiv: 2107.02314. [Online]. Available: https://doi.org/10.48550/arXiv.2107.02314.

[17] D. S. Marcus, T. H. Wang, J. Parker, J. G. Csernansky, J. C. Morris, and R. L. Buckner, "Open Access Series of Imaging Studies (OASIS): cross-sectional MRI data in young, middle aged, nondemented, and demented older adults," J. Cogn. Neurosci., vol. 19, no. 9, pp. 1498-1507, September 2007.

[18] J. Ma, Y. T. He, F. F. Li, L. Han, C. Y. You, and B. Wang, "Segment anything in medical images," Nat. Commun., vol. 15, no. 1, pp. 654, 22 January 2024.

[19] V. I. Butoi, J. J. Gonzalez Ortiz, T. Y. Ma, M. R. Sabuncu, J. Guttag, and A. V. Dalca, "UniverSeg: Universal medical image segmentation," in *2023 IEEE/CVF International Conference on Computer Vision (ICCV)*, Paris, FR, 06 October 2023, New York, NY, USA: IEEE, pp. 21381-21394.

[20] X. Ma, J. Fu, W. Liao, S. Zhang, and G. Wang, "CLISC: Bridging clip and SAM by enhanced CAM for unsupervised brain tumor segmentation," in *2025 IEEE 22nd International Symposium on Biomedical Imaging (ISBI)*, Houston, TX, USA, 12 May 2025, New York, NY, USA: IEEE, pp. 1-5.

[21] L. J. Yang, Q. M. Dong, D. Lin, C. F. Tian, and X. L. Lü, "MUNet: a novel framework for accurate brain tumor segmentation combining UNet and mamba networks," Front. Comput. Neurosci., vol. 19, pp. 1513059, 29 January 2025.

[22] I. Aboussaleh, J. Riffi, K. El Fazazy, M. A. Mahraz, and H. Tairi, "Enhanced brain tumor segmentation via transfer learning and attention mechanism," in *2024 Mediterranean Smart Cities Conference (MSCC)*, Martil - Tetuan, MA, 04 October 2024, New York, NY, USA: IEEE, pp. 1-6.

[23] Y. Lyu, and X. L. Tian, "MWG-UNet++: Hybrid transformer U-net model for brain tumor segmentation in MRI scans," Bioengineering, vol. 12, no. 2, pp. 140, 31 January 2025.

[24] O. Ronneberger, P. Fischer, and T. Brox, "U-net: Convolutional networks for biomedical image segmentation," in *Medical Image Computing and Computer-Assisted Intervention - MICCAI 2015*, Munich, DE, N. Navab, J. Hornegger, W. M. Wells and A. F. Frangi, Eds., 18 November 2015, Cham, ZG, CH: Springer International Publishing, pp. 234-241.

[25] F. Isensee, P. F. Jäger, P. M. Full, P. Vollmuth, and K. H. Maier-Hein, "nnU-Net for Brain Tumor Segmentation," in *Brainlesion: Glioma, Multiple Sclerosis, Stroke and Traumatic Brain Injuries*, Lima, PE, A. Crimi and S. Bakas, Eds., 26 March 2021, Cham, ZG, CH: Springer International Publishing, pp. 118-132.

[26] J. N. Chen, J. R. Mei, X. H. Li, Y. Y. Lu, Q. H. Yu, Q. Y. Wei, et al., "TransUNet: Rethinking the U-Net architecture design for medical image segmentation through the lens of transformers," Med. Image Anal., vol. 97, pp. 103280, October 2024.

[27] J. D. Wu, W. Ji, H. Z. Fu, M. Xu, Y. M. Jin, and Y. W. Xu, "Medsegdiff-v2: Diffusion-based medical image segmentation with transformer," Proc. Conf. AAAI Artif. Intell., vol. 38, no. 6, pp. 6030-6038, 24 March 2024.

[28] H. C. Mi, H. S. Gan, X. Y. Wang, A. Shimizu, M. H. Ramlee, and M. Z. Unlu, "DF-SegDiff: A diffusion segmentation model using a new distributed parallel computing algorithm," in *2024 IEEE International Conference on Cognitive Computing and Complex Data (ICCD)*, Qinzhou, CN, 28 January 2024, New York, NY, USA: IEEE, pp. 13-17.

[29] H. S. Gan, M. H. Ramlee, Z. M. Wang, and A. Shimizu, "A review on medical image segmentation: Datasets, technical models, challenges and solutions," Wiley Interdiscip. Rev. Data Min. Knowl. Discov., vol. 15, no. 1, pp. e1574, March 2025.

[30] H.-S. Gan, T.-S. Tan, A. H. Abdul Karim, K. A. Sayuti, and M. R. A. Kadir, "Interactive medical image segmentation with seed precomputation system: Data from the Osteoarthritis Initiative," in *2014 IEEE Conference on Biomedical Engineering and Sciences (IECBES)*, Kuala Lumpur, MY, 26 February 2014, New York, NY, USA: IEEE, pp. 315-318.