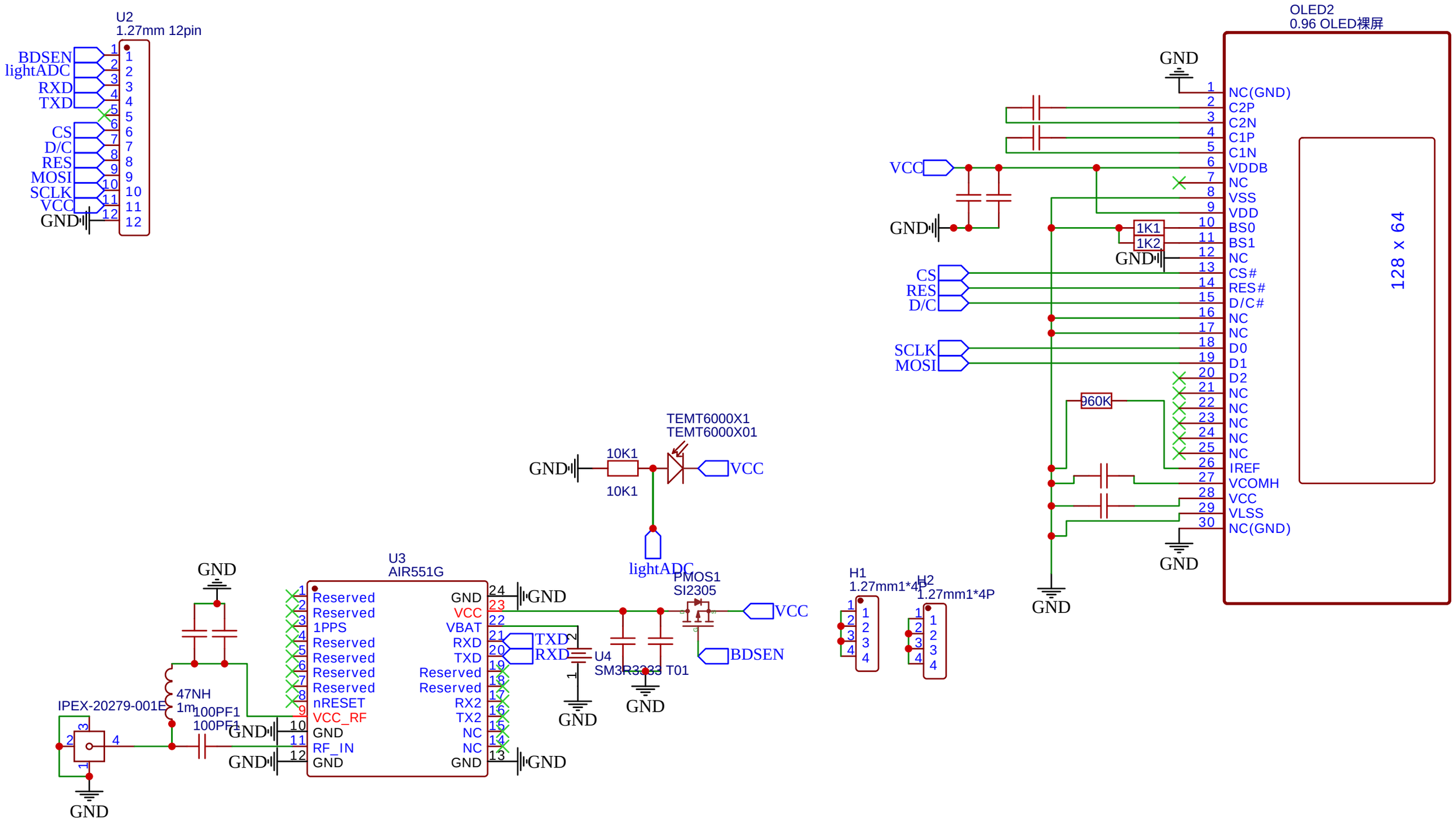
U2
1.27mm 12pin
BDSEN
lightADC
RXD
TXD
CS
D/C
RES
MOSI
SCLK
VCC
GND
OLED2
0.96 OLED裸屏
NC(GND)
C2P
C2N
C1P
C1N
VDDB
NC
VSS
VDD
BS0
BS1
NC
CS#
RES#
D/C#
NC
NC
D0
D1
D2
NC
NC
NC
NC
NC
IREF
VCOMH
VCC
VLSS
NC(GND)
128 x 64
1K1
1K2
960K
TEMT6000X1
TEMT6000X01
10K1
10K1
lightADC
PMOS1
SI2305
BDSEN
U4
SM3R3333 T01
H1
1.27mm1*4P
H2
1.27mm1*4P
U3
AIR551G
Reserved
Reserved
1PPS
Reserved
Reserved
Reserved
Reserved
nRESET
VCC_RF
GND
RF_IN
GND
GND
VCC
VBAT
RXD
TXD
Reserved
Reserved
RX2
TX2
NC
NC
GND
TXD
RXD
IPEX-20279-001E
47NH
1m
100PF1
100PF1