Microcontroller

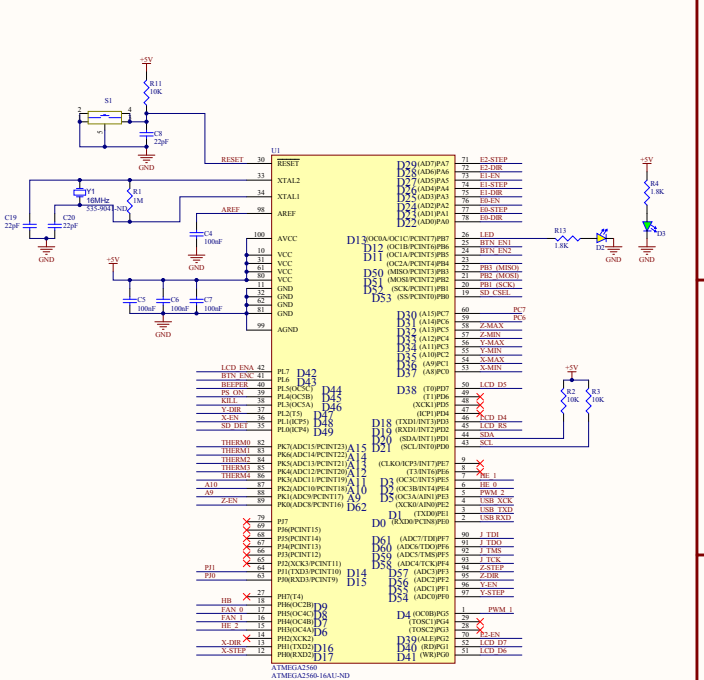

Thermistors

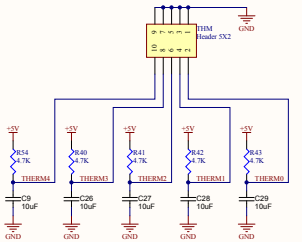

Endstops

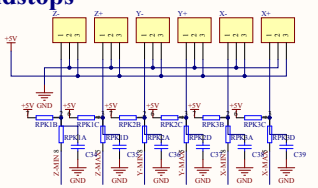

I2C Encoders

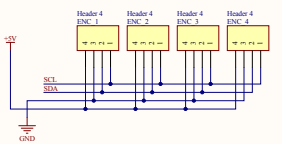

Stepper Drivers

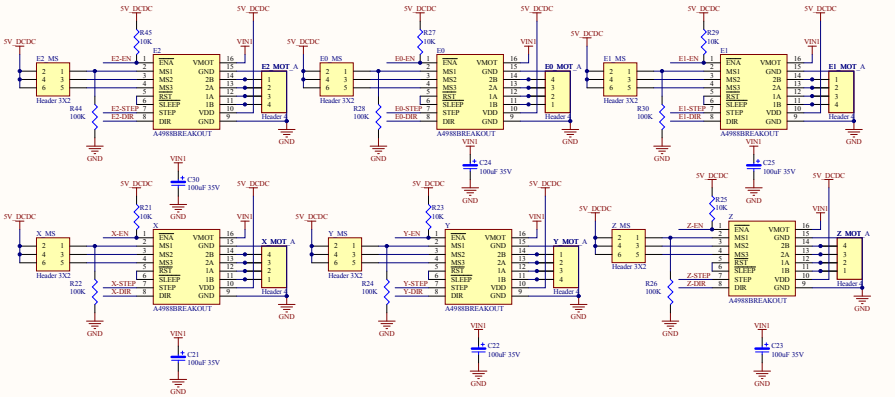

MOSFET Outputs

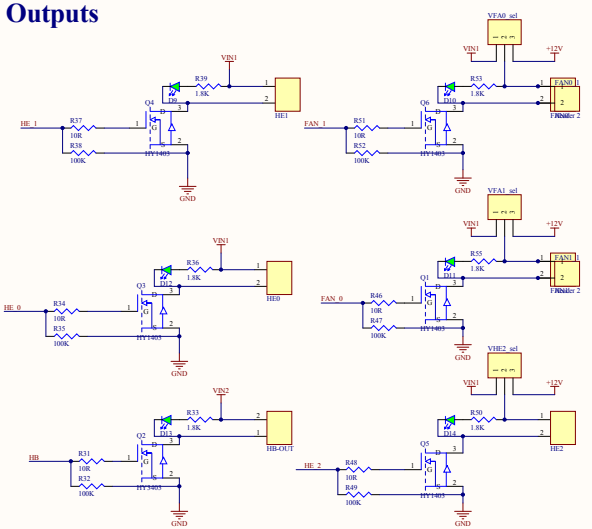

USB Interface

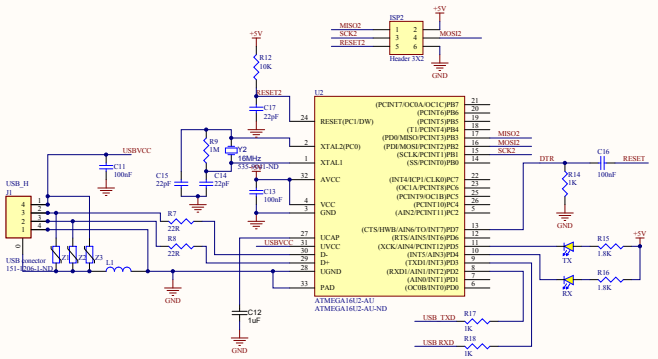

Auxiliary IO

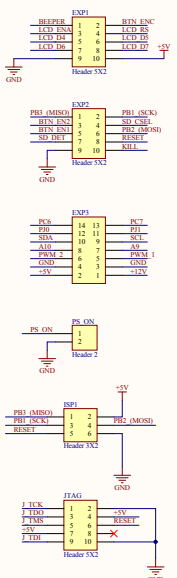
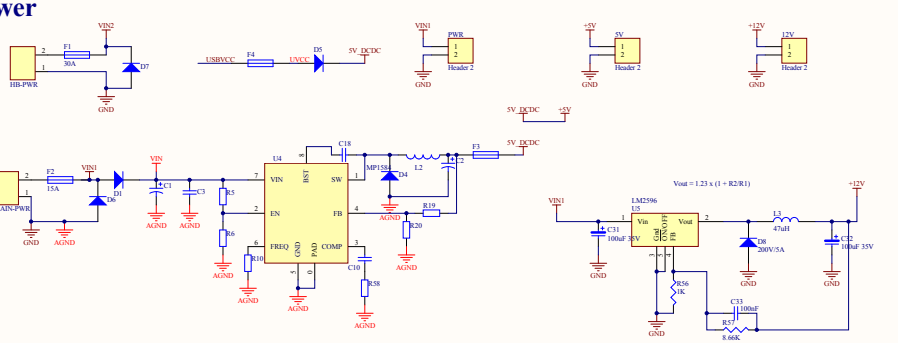
Power