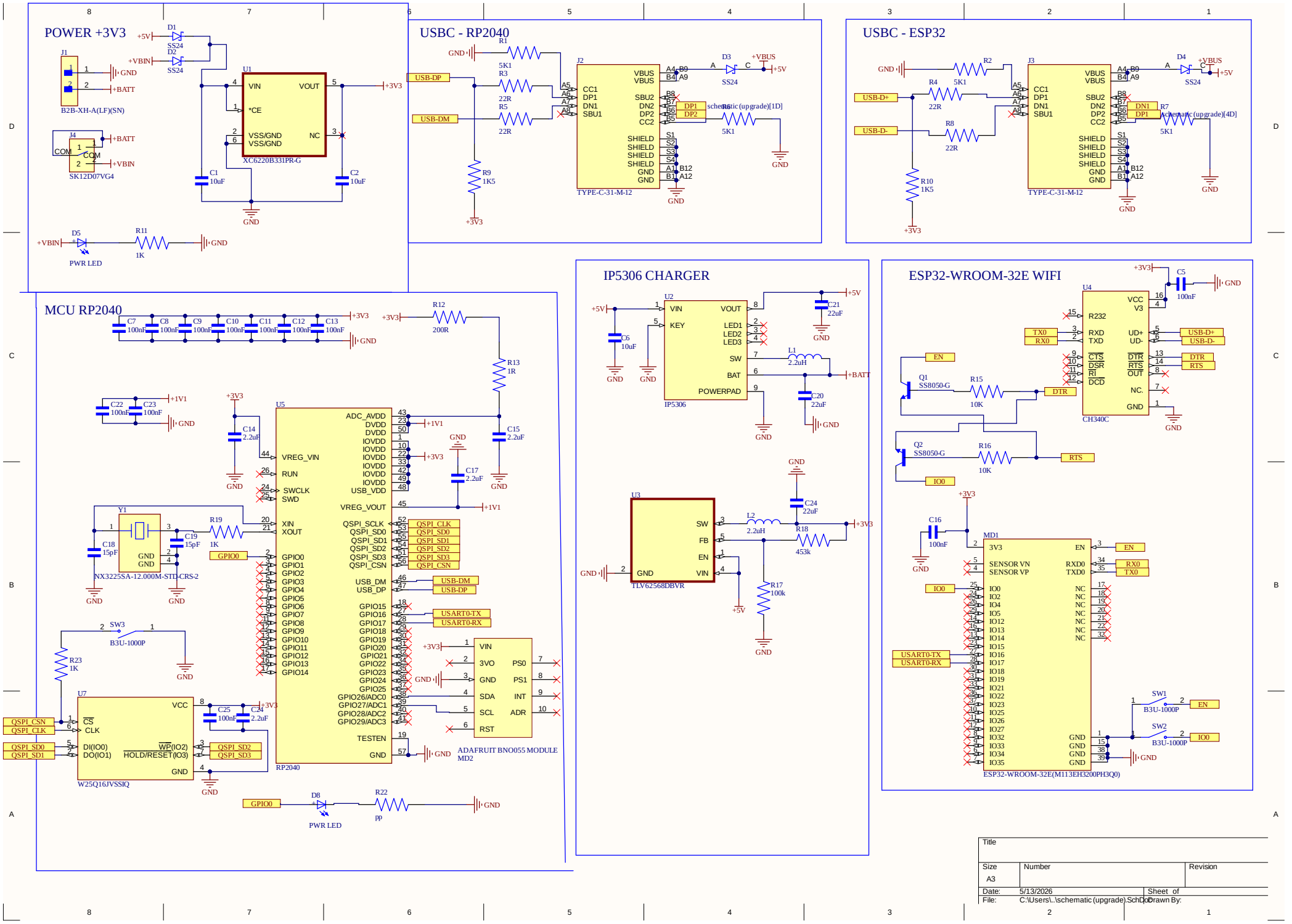
POWER +3V3
D1
SS24
D2
SS24
+5V
+VBIN
J1
B2B-XH-A(LF)(SN)
GND
+BATT
J4
COM
SK12D07VG4
U1
VIN
VOUT
*CE
VSS/GND
VSS/GND
NC
XC6220B331PR-G
+3V3
C1
10uF
C2
10uF
D5
PWR LED
R11
1K
USBC - RP2040
J2
TYPE-C-31-M-12
USB-DP
USB-DM
R1
5K1
R3
22R
R5
22R
R9
1K5
D3
SS24
+VBUS
DP1
DP2
R6
5K1
USBC - ESP32
J3
TYPE-C-31-M-12
R2
5K1
R4
22R
R8
22R
R10
1K5
D4
SS24
DN1
DP1
R7
5K1
MCU RP2040
C7
100nF
C8
100nF
C9
100nF
C10
100nF
C11
100nF
C12
100nF
C13
100nF
R12
200R
R13
1R
C22
100nF
C23
100nF
+1V1
C14
2.2uF
C15
2.2uF
C17
2.2uF
U5
RP2040
VREG_VIN
RUN
SWCLK
SWD
XIN
XOUT
VREG_VOUT
USB_VDD
QSPI_SCLK
QSPI_SD0
QSPI_SD1
QSPI_SD2
QSPI_SD3
QSPI_CSN
USB_DM
USB_DP
GPIO15
GPIO16
GPIO17
GPIO18
GPIO19
GPIO20
GPIO21
GPIO22
GPIO23
GPIO24
GPIO25
GPIO26/ADC0
GPIO27/ADC1
GPIO28/ADC2
GPIO29/ADC3
TESTEN
Y1
NX3225SA-12.000M-STD-CRS-2
C18
15pF
C19
15pF
R19
1K
GPIO0
SW3
B3U-1000P
R23
1K
U7
W25Q16JVSSIQ
VCC
CS
CLK
DI(IO0)
DO(IO1)
WP(IO2)
HOLD/RESET(IO3)
C25
100nF
C24
2.2uF
USART0-TX
USART0-RX
ADAFRUIT BNO055 MODULE
MD2
VIN
3VO
GND
SDA
SCL
RST
PS0
PS1
INT
ADR
D8
PWR LED
R22
pp
IP5306 CHARGER
U2
IP5306
VIN
KEY
VOUT
LED1
LED2
LED3
SW
BAT
POWERPAD
C6
10uF
C21
22uF
L1
2.2uH
C20
22uF
+BATT
U3
TLV62568DBVR
SW
FB
EN
GND
VIN
C24
22uF
L2
2.2uH
R18
453k
R17
100k
ESP32-WROOM-32E WIFI
U4
CH340C
VCC
V3
R232
RXD
TXD
UD+
UD-
CTS
DSR
RI
DCD
DTR
RTS
OUT
NC.
GND
C5
100nF
Q1
SS8050-G
R15
10K
Q2
SS8050-G
R16
10K
EN
IO0
TX0
RX0
USB-D+
USB-D-
MD1
ESP32-WROOM-32E(M113EH3200PH3Q0)
3V3
SENSOR VN
SENSOR VP
RXD0
TXD0
C16
100nF
SW1
B3U-1000P
SW2
B3U-1000P
Title
Size
A3
Number
Revision
Date: 5/13/2026
Sheet of
File: C:\Users\..\schematic(upgrade).SchDoc
Drawn By:

Board Stack Report