ECE 423
Fully Differential Operational Amplifier

David Velasco Perez

1. Project Overview

LVS: Passed

DRC: Passed

Table 1: Specifications and Results

Name	Spec	Slow	Typical	Fast
Power Supply Voltage	VDD	1.7 V	1.8 V	1.9 V
Output CM Voltage	VCM	900 mV		
Reference Current	IREF	150 μA		
Temperature [C]	-	100	27	-40
Loop Gain [dB]	> 65 dB	65.01	67.44	68.99
Loop UGBW [Hz]	> 100 MHz	120.4	125.2	130.6
Loop Phase Margin [Deg]	> 60°	60.62	61.53	62.39
CMFB Phase Margin [Deg]	> 60°	83.41	83.76	83.89
CM Accuracy [mV]	< $\pm$50	-40.83	4.67	21.77
Output Swing [V_{pp}]	> 1.2	2.18	2.36	2.5
Power Consumption [mW]	< 12	6.8	7.2	7.59

2. Schematics

BIAS

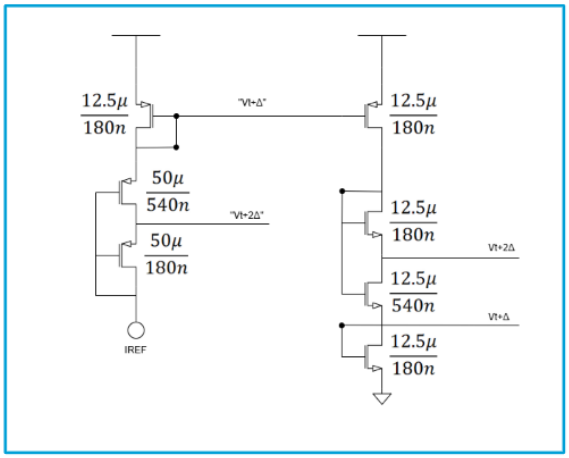

CMFB

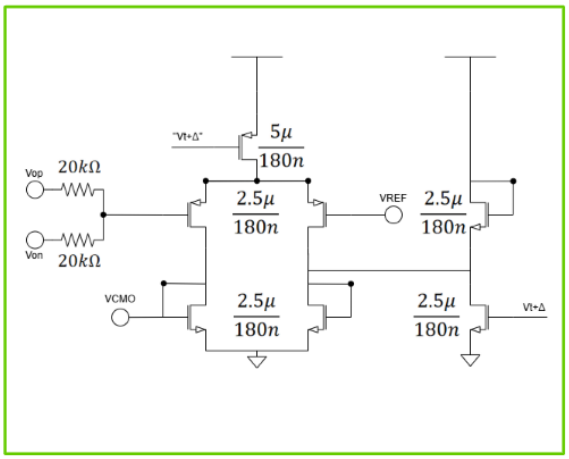

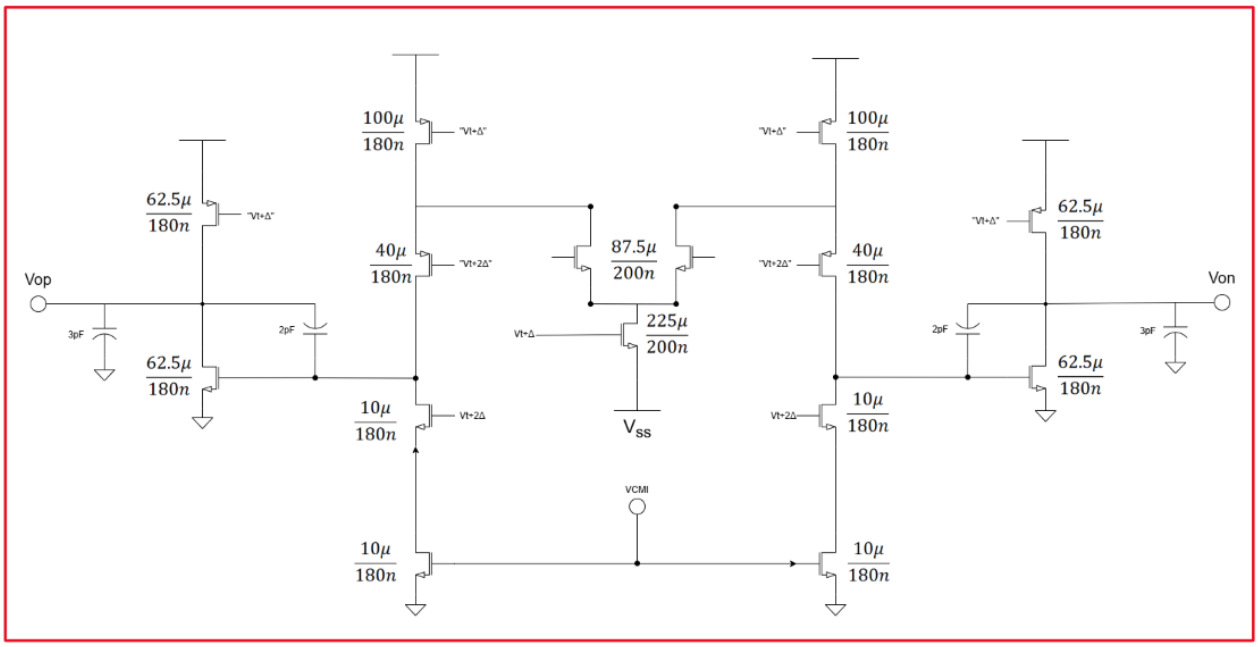

AMPLIFIER

Figure 1: Fully Differential Operational Amplifier Schematic

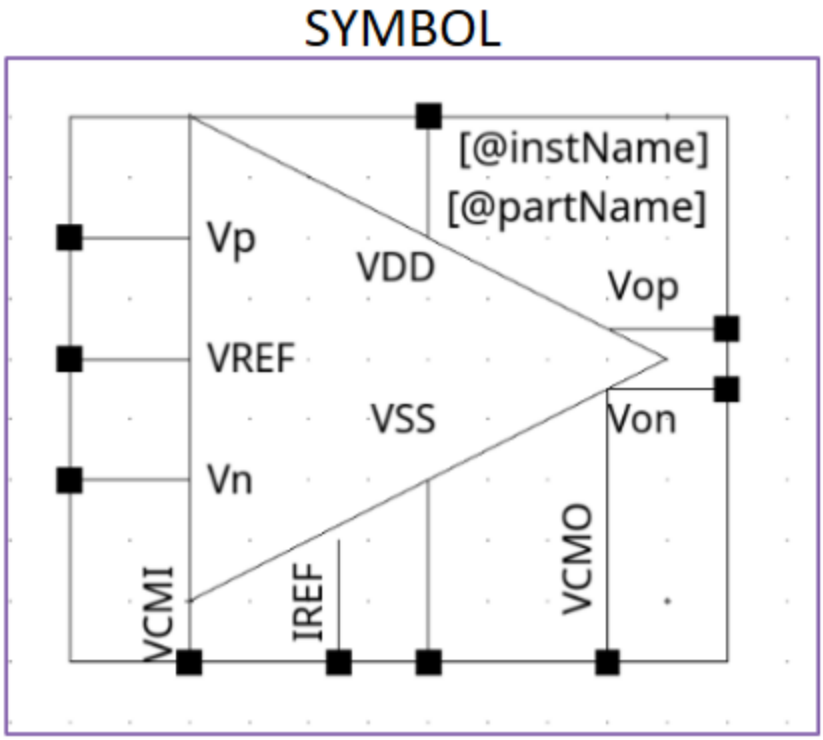

Figure 2: Fully Differential Operational Amplifier Symbol

3. Simulation Results

3.1. Differential Loop

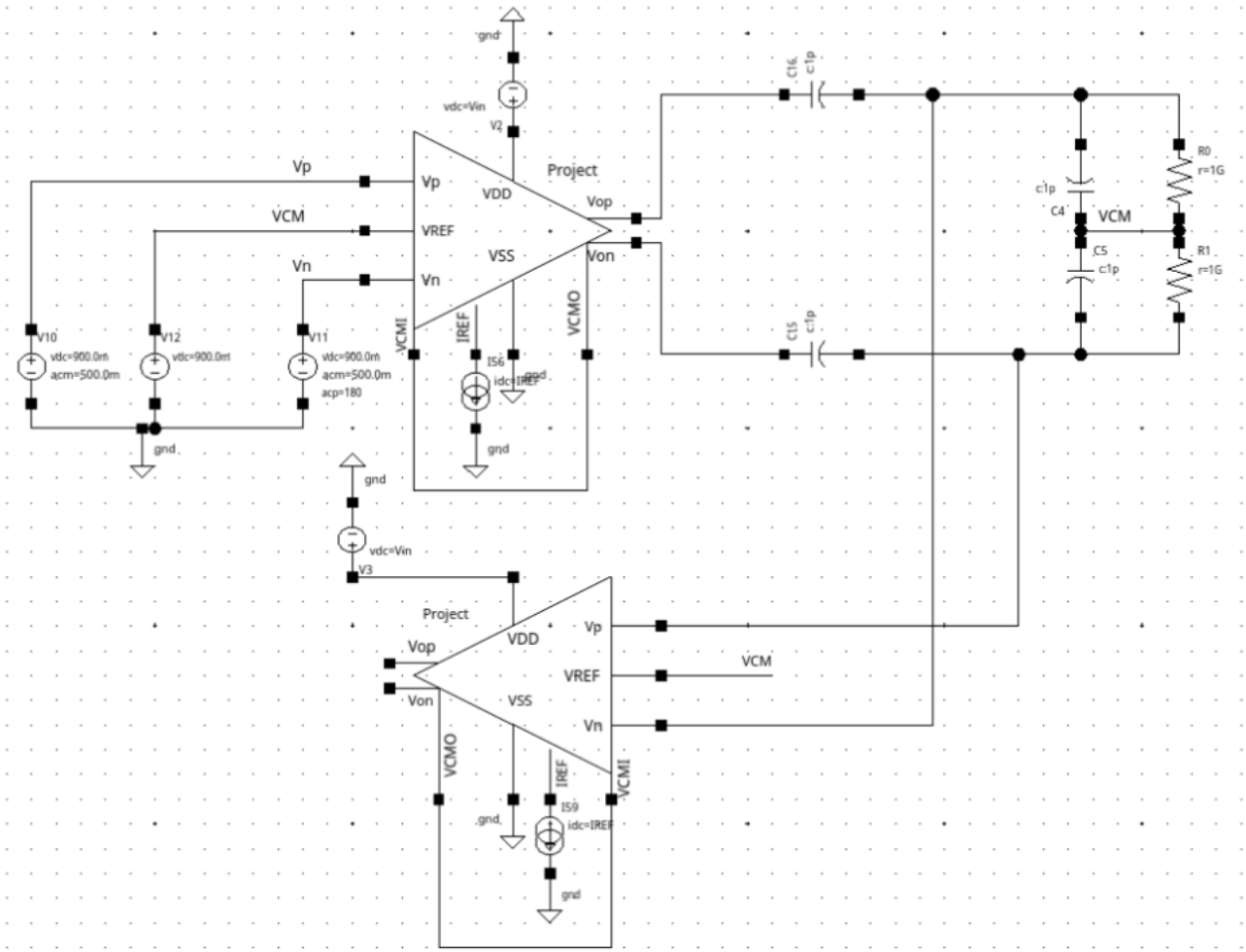

Figure 3: Differential Loop Testbench

Table 2: Differential Loop Specifications

	Slow	Typical	Fast
Gain [dB]	65.01	67.44	68.99
UGF [MHz]	119.84	125.06	130.11
PM [deg]	60.62	61.53	62.39

3.1.1. Gain

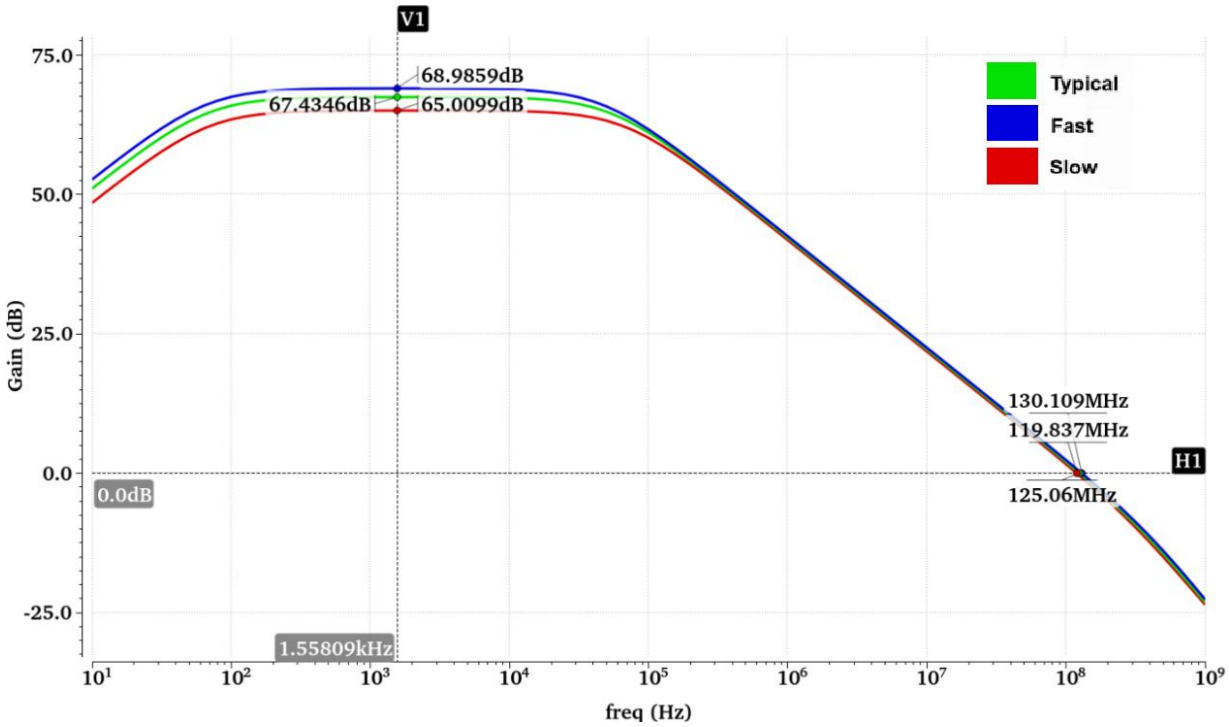

Figure 4: Gain vs Frequency Plot (all three corners)

3.1.2. Phase

I. Slow

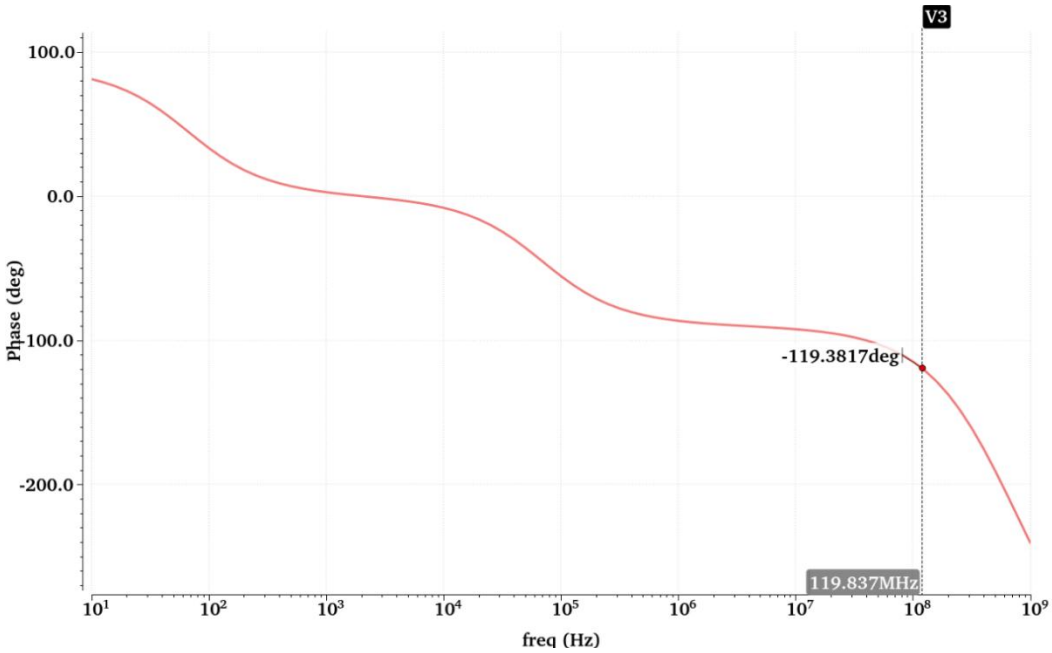

Figure 5: Phase vs Frequency Plot (Slow)

II. Typical

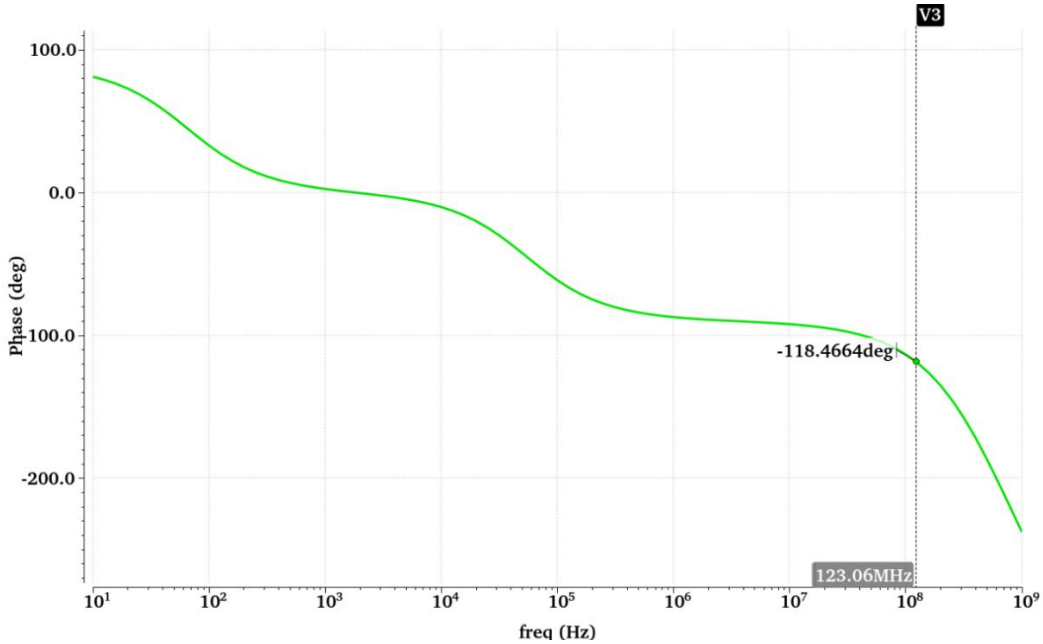

Figure 6: Figure 5: Phase vs Frequency Plot (Typically)

III. <u>Fast</u>

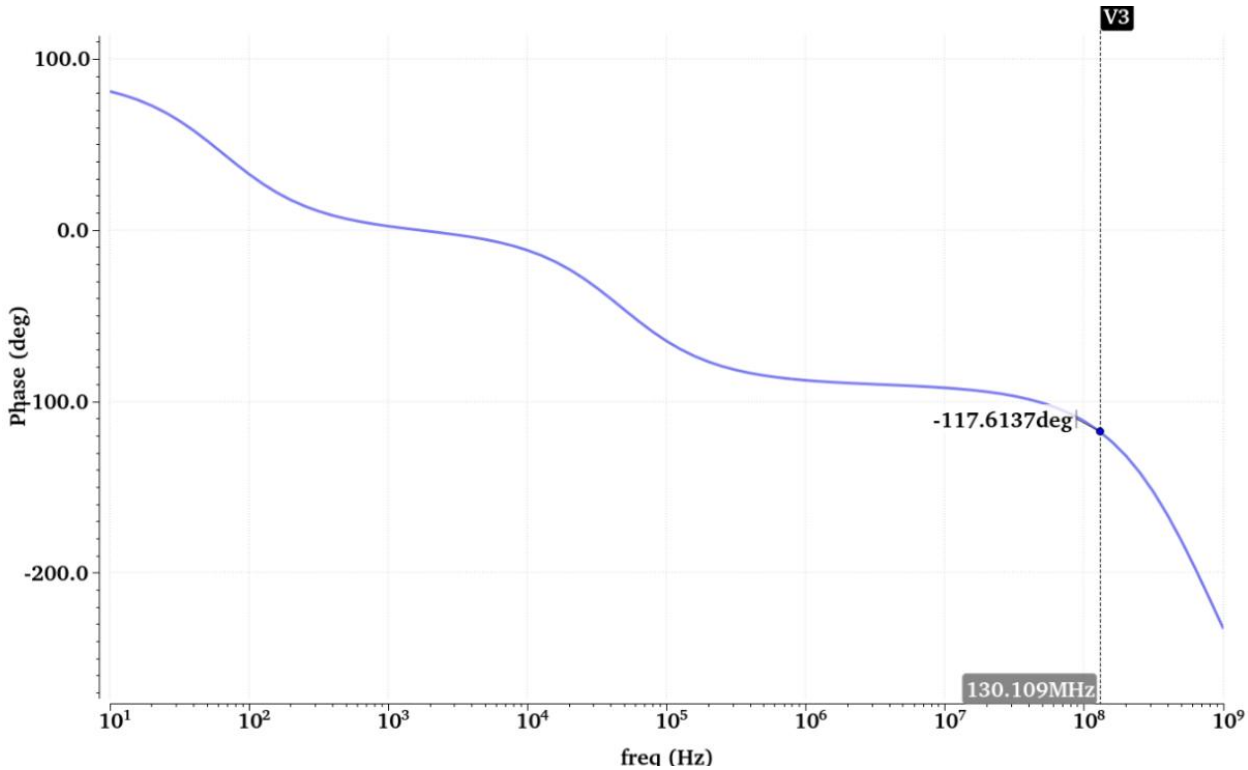

Figure 7: Phase vs Frequency Plot (Fast)

3.2. CMFB

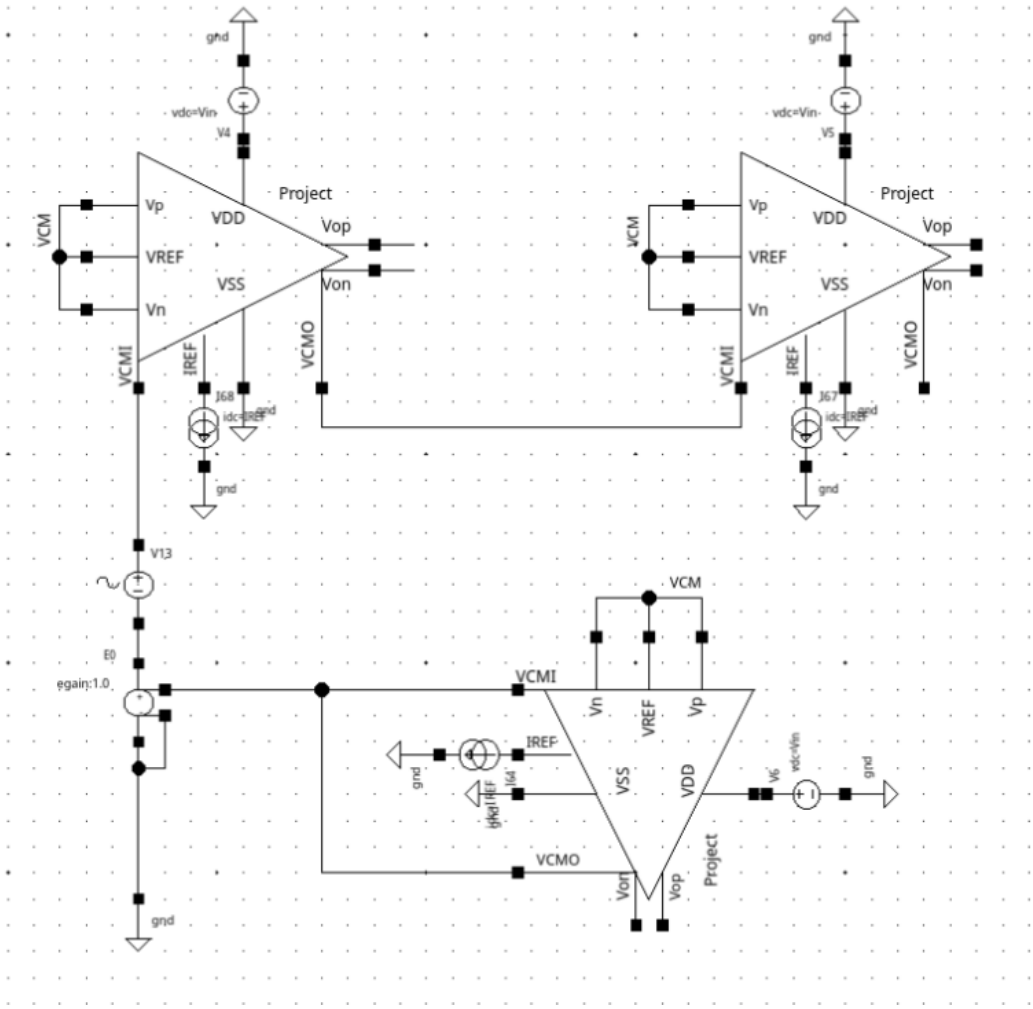

Figure 8: CMFB Testbench

Table 3: CMFB Specifications

	Slow	Typical	Fast
PM [deg]	83.41	83.76	83.89

3.2.1. Gain

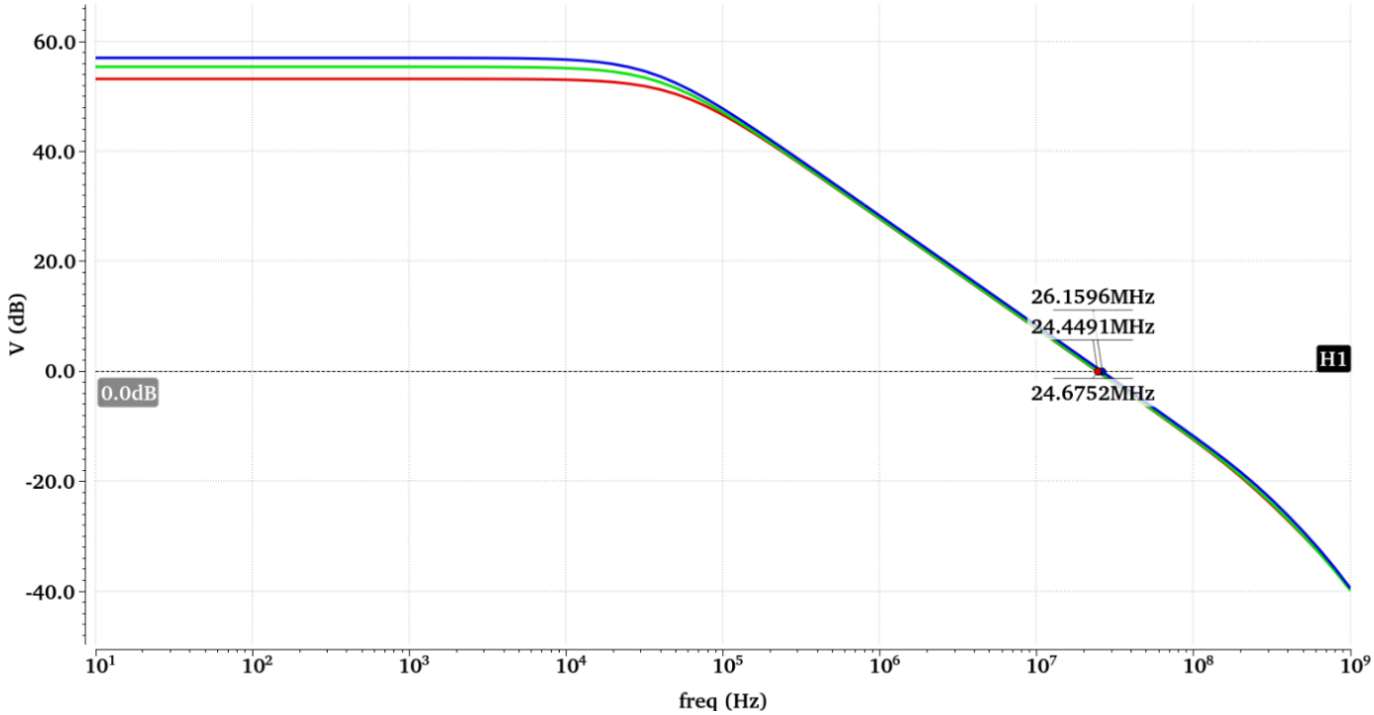

Figure 9: Gain vs Frequency Plot (All Three Cases)

3.2.2. Phase

I. Slow

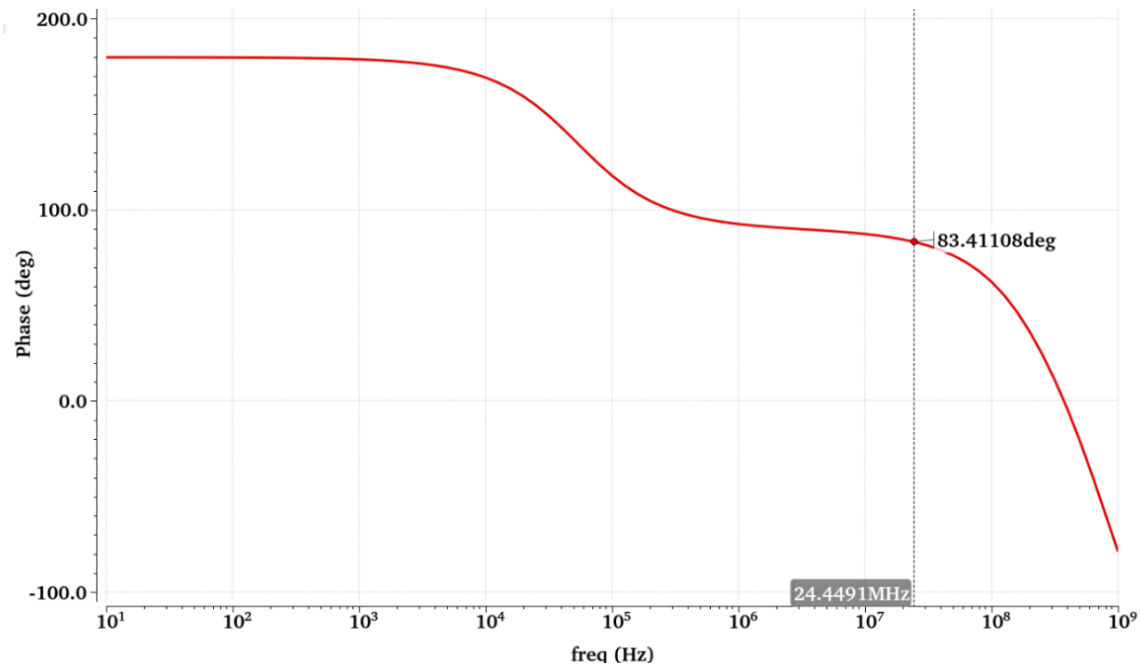

Figure 10: Phase vs Frequency Plot (Slow)

II. Typical

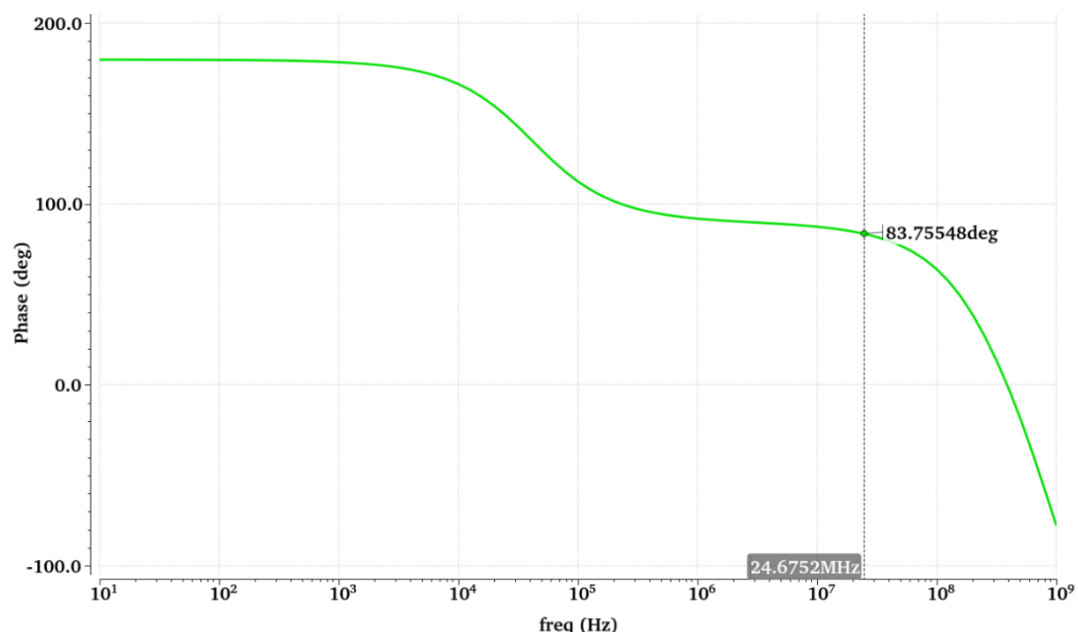

Figure 11: Phase vs Frequency Plot (Typical)

III. Fast

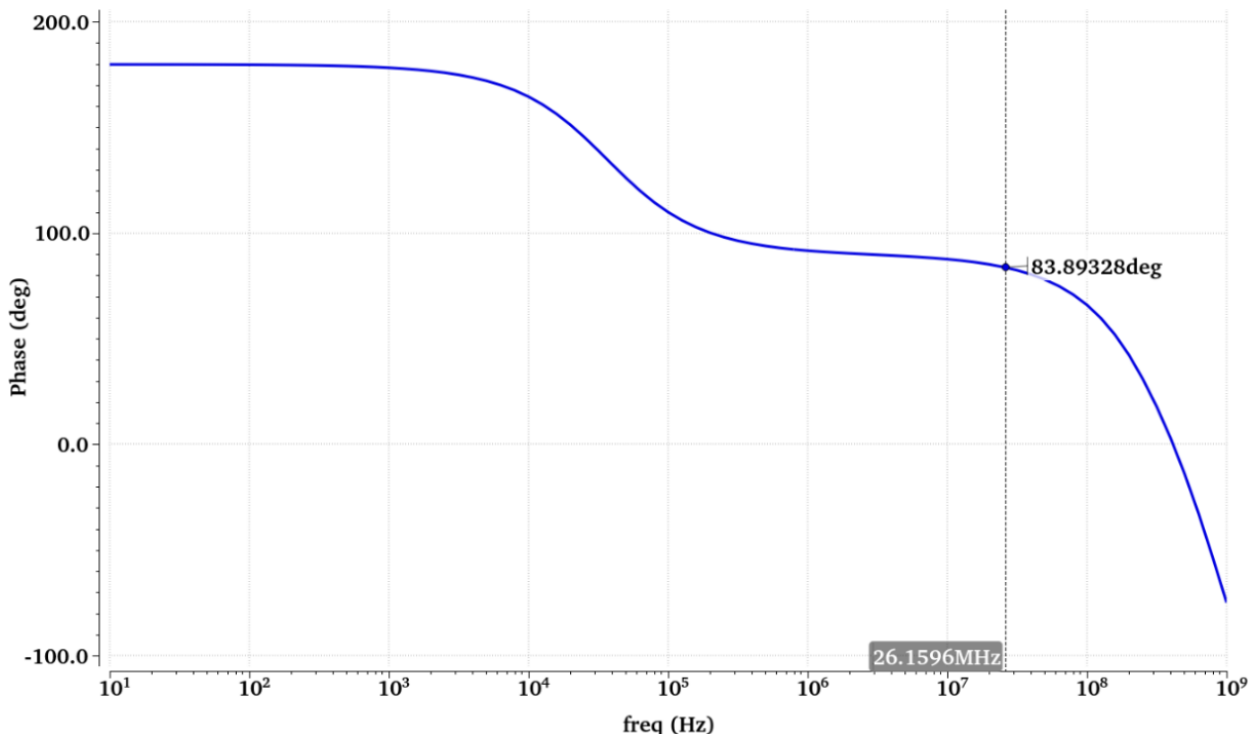

Figure 12: Phase vs Frequency Plot (Fast)

3.3. DC & Output Swing

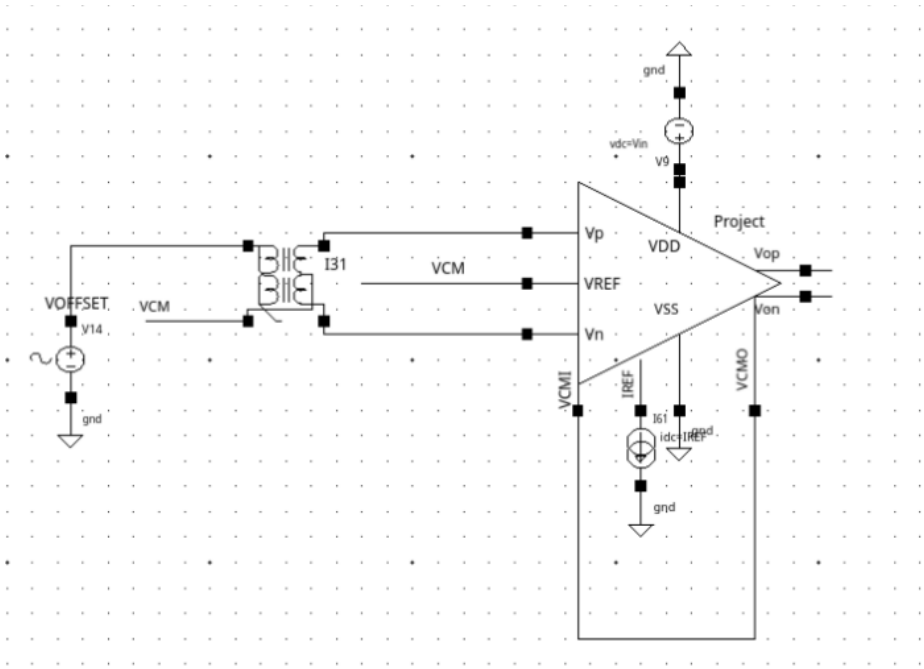

Figure 13: Output Swing Testbench

Table 4: Output Swing Specification

	Slow	Typical	Fast
CM Accuracy [mV]	-40.83	4.67	21.77
Output Swing [V_{pp}]	2.18	2.36	2.5

3.3.1. Typical

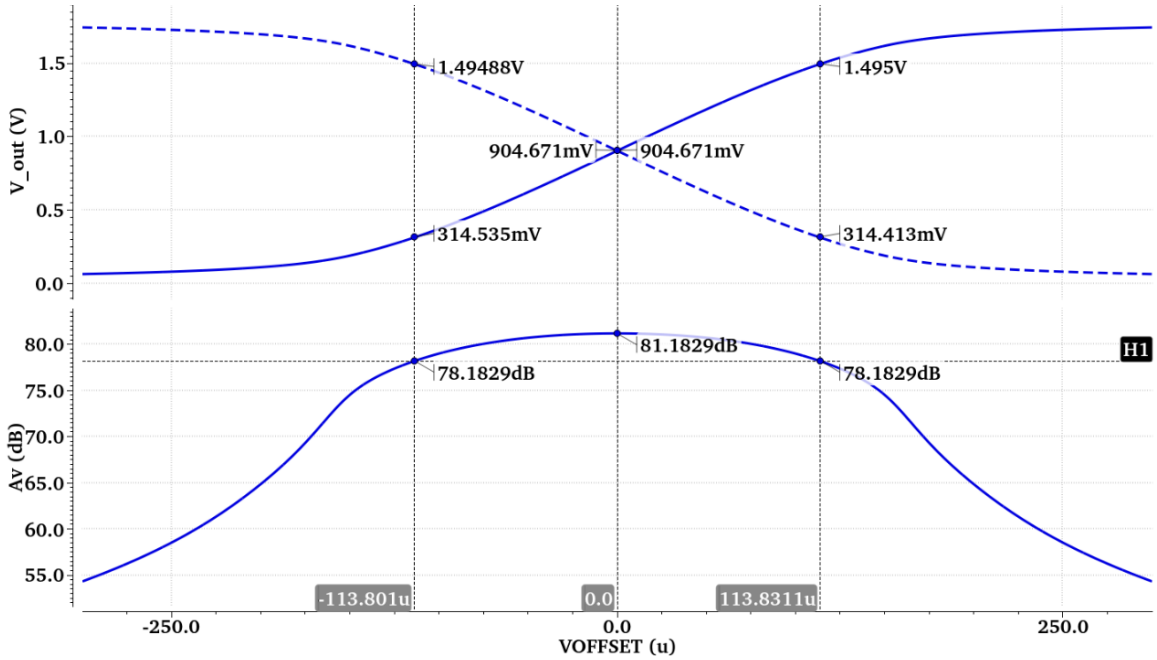

Figure 14: Output Swing (Typical)

3.3.2. Slow

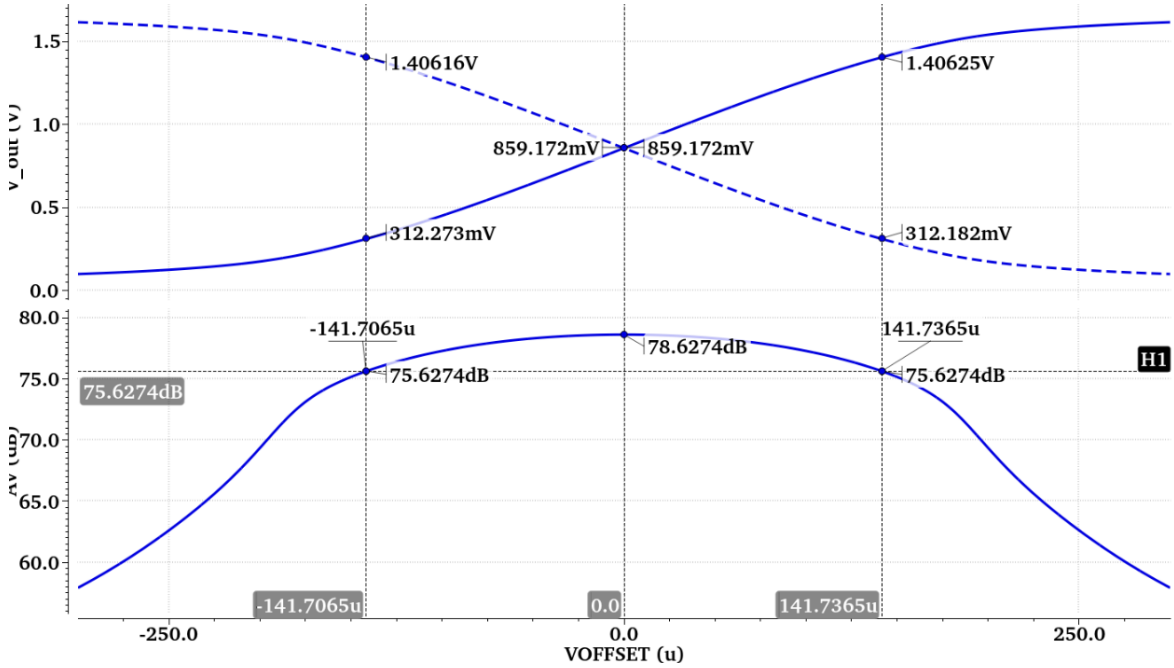

Figure 15: Output Swing (Slow)

3.3.3. Fast

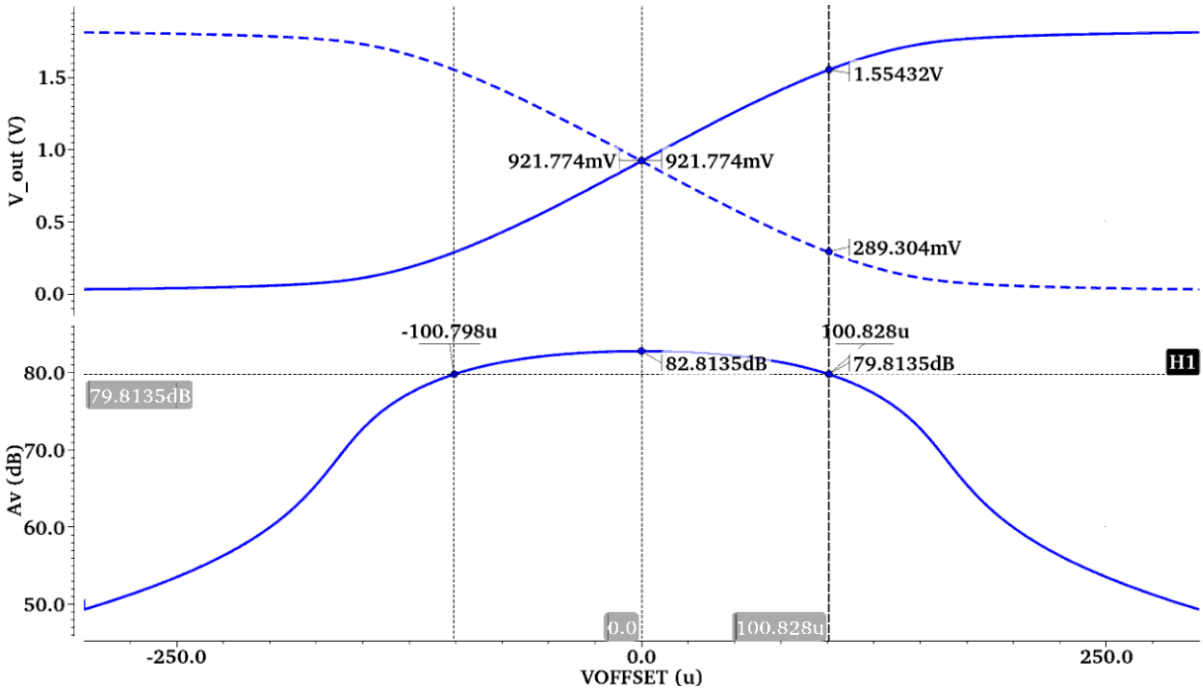

Figure 16: Output Swing (Fast)

4. Layout

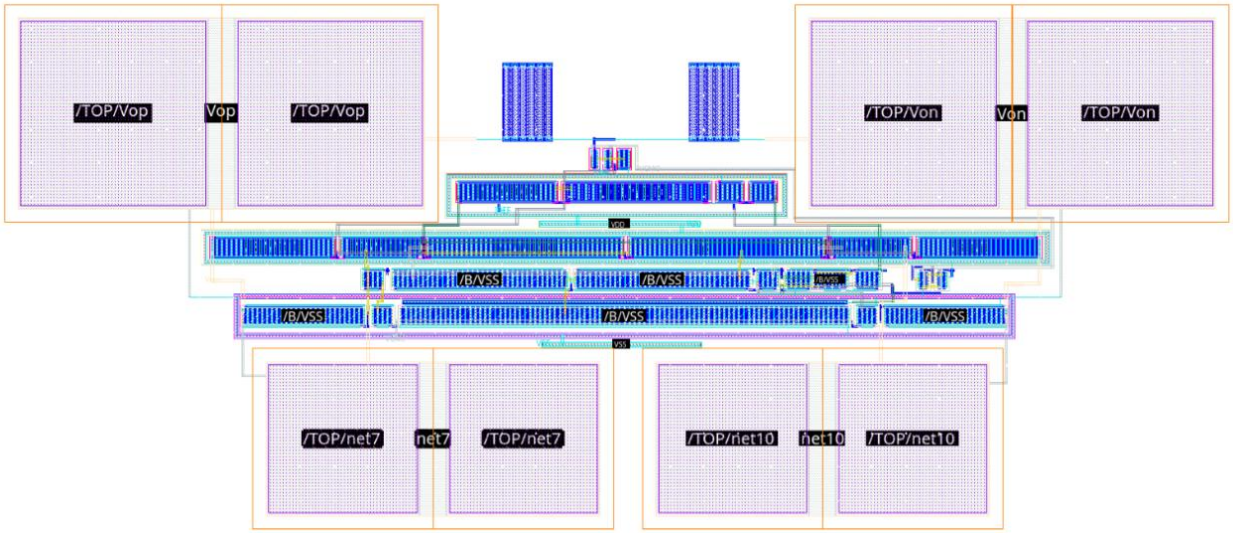

Figure 17: Fully Differential Amplifier Layout

4.1. DRC Results (Successful)

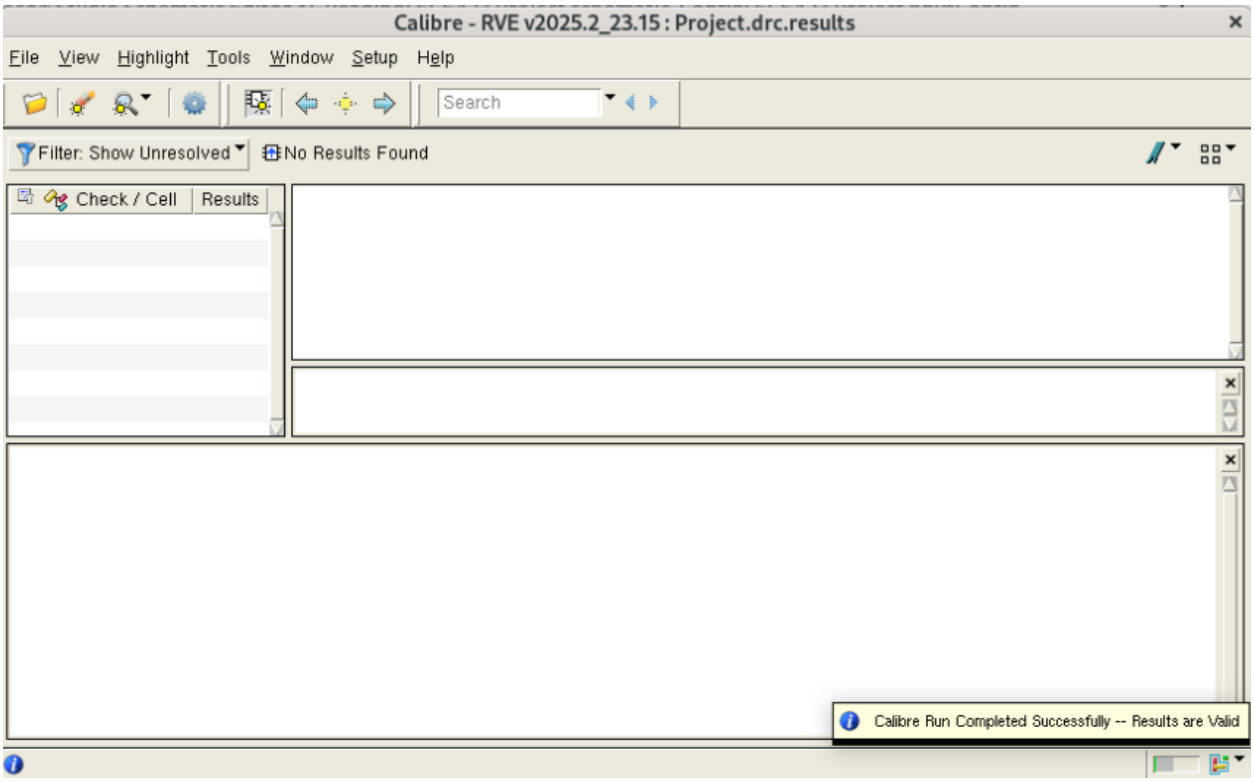

Figure 18: DRC Results

4.2. LVS Results (Successful)

```
##################################################
##                                              ##
##        C A L I B R E   S Y S T E M           ##
##                                              ##
##            L V S   R E P O R T               ##
##                                              ##
##################################################


REPORT FILE NAME:         Project.lvs.report
LAYOUT NAME:              Project.sp ('Project')
SOURCE NAME:              Project.src.net ('Project')
RULE FILE:                _calibre.lvs_
CREATION TIME:            Tue Mar 10 20:04:04 2026
CURRENT DIRECTORY:        /nfs/stak/users/velascod/ECE42X/run_lvs_proj
USER NAME:                velascod
CALIBRE VERSION:          v2025.2_23.15    Thu May 1 16:58:34 PDT 2025


                     OVERALL COMPARISON RESULTS


        #       ###################        _   _
      #         #                 #       *   *
  #   #         #     CORRECT     #         |
   # #          #                 #       \___/
    #           ###################
```

Figure 19: LVS Results