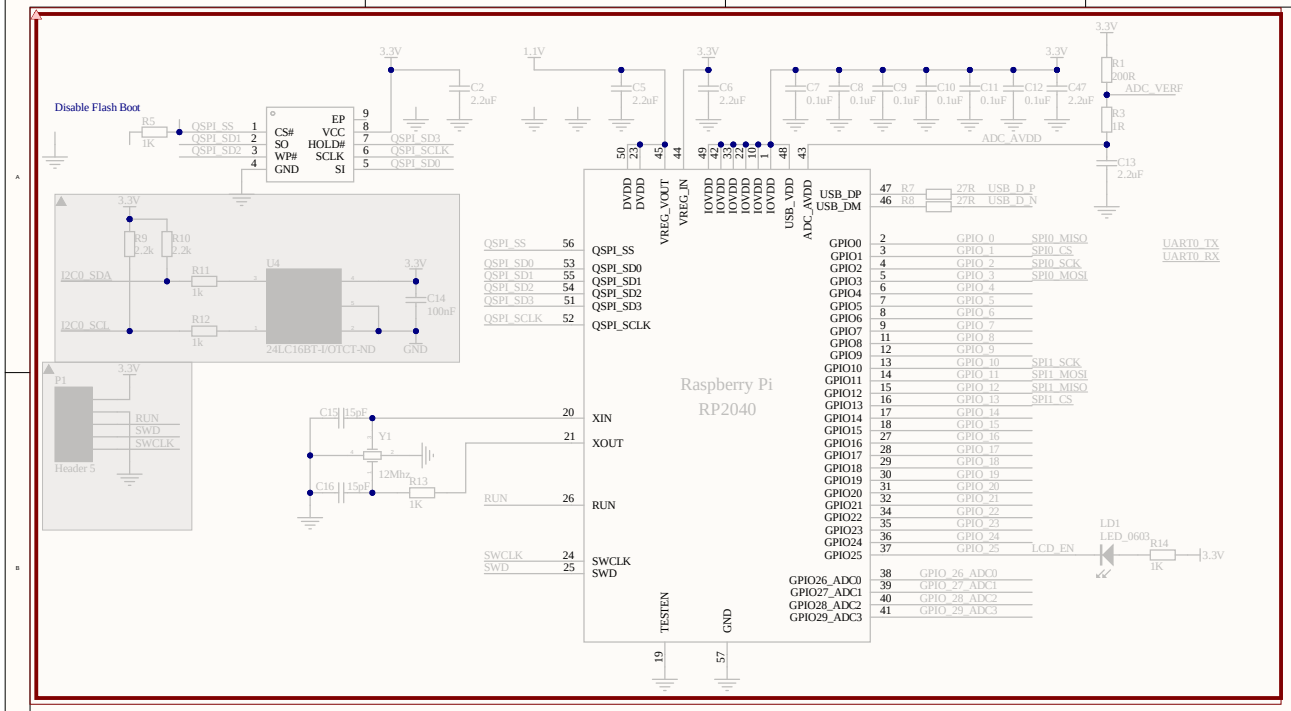
Disable Flash Boot
Raspberry Pi
RP2040
24LC16BT-I/OTCT-ND
Header 5
12Mhz
LED_0603
ADC_VERF
ADC_AVDDD
UART0_TX
UART0_RX
LCD_EN

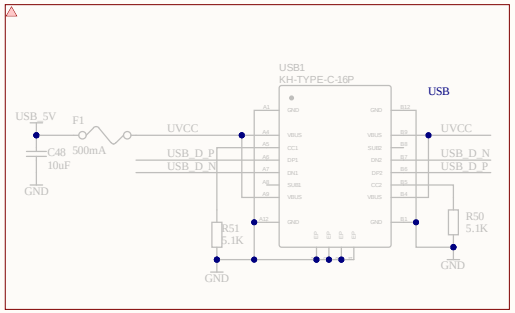
USB1
KH-TYPE-C-16P
USB
USB_5V
UVCC
USB_D_P
USB_D_N
500mA
10uF
GND

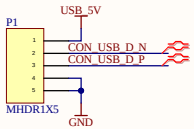
P1
USB_5V
CON_USB_D_N
CON_USB_D_P
MHDR1X5
GND

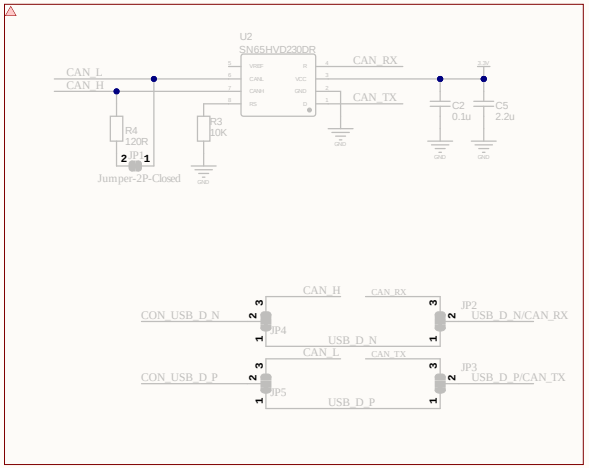
U2
SN65HVD230DR
CAN_L
CAN_H
CAN_RX
CAN_TX
Jumper-2P-Closed
CON_USB_D_N
CON_USB_D_P
USB_D_N/CAN_RX
USB_D_P/CAN_TX

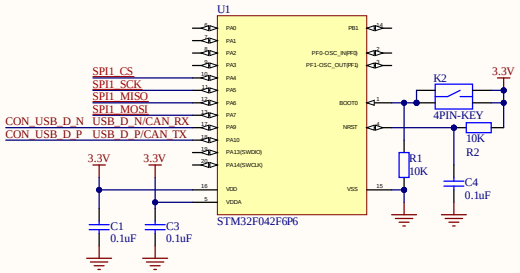
U1
STM32F042F6P6
SPI1_CS
SPI1_SCK
SPI1_MISO
SPI1_MOSI
CON_USB_D_N
CON_USB_D_P
USB_D_N/CAN_RX
USB_D_P/CAN_TX
K2
4PIN-KEY
10K
R2
R1
10K
C4
0.1uF
3.3V

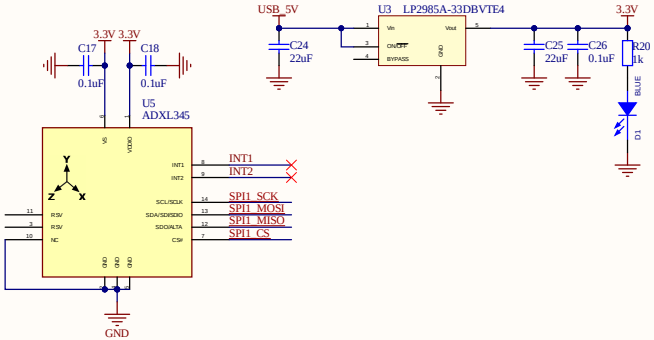
U5
ADXL345
U3 LP2985A-33DBVTE4
USB_5V
3.3V
INT1
INT2
SPI1_SCK
SPI1_MOSI
SPI1_MISO
SPI1_CS
BLUE
D1
GND