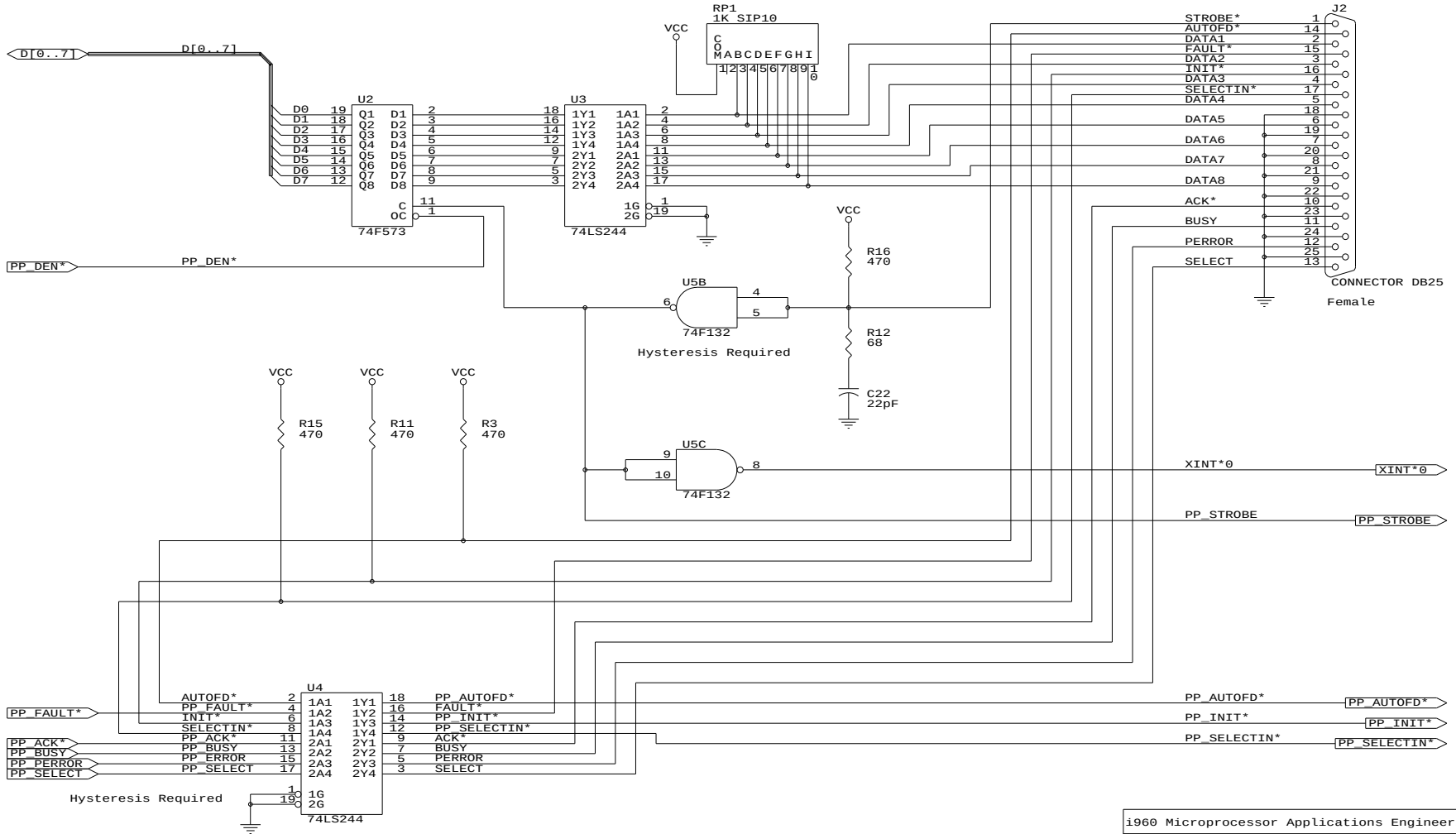

i960 Microprocessor Applications Engineering		
Title 80960JX Evaluation Platform		
Size B	Document Number Parallel Port	REV 0
Date: June 7, 1994	Sheet 12 of 21	