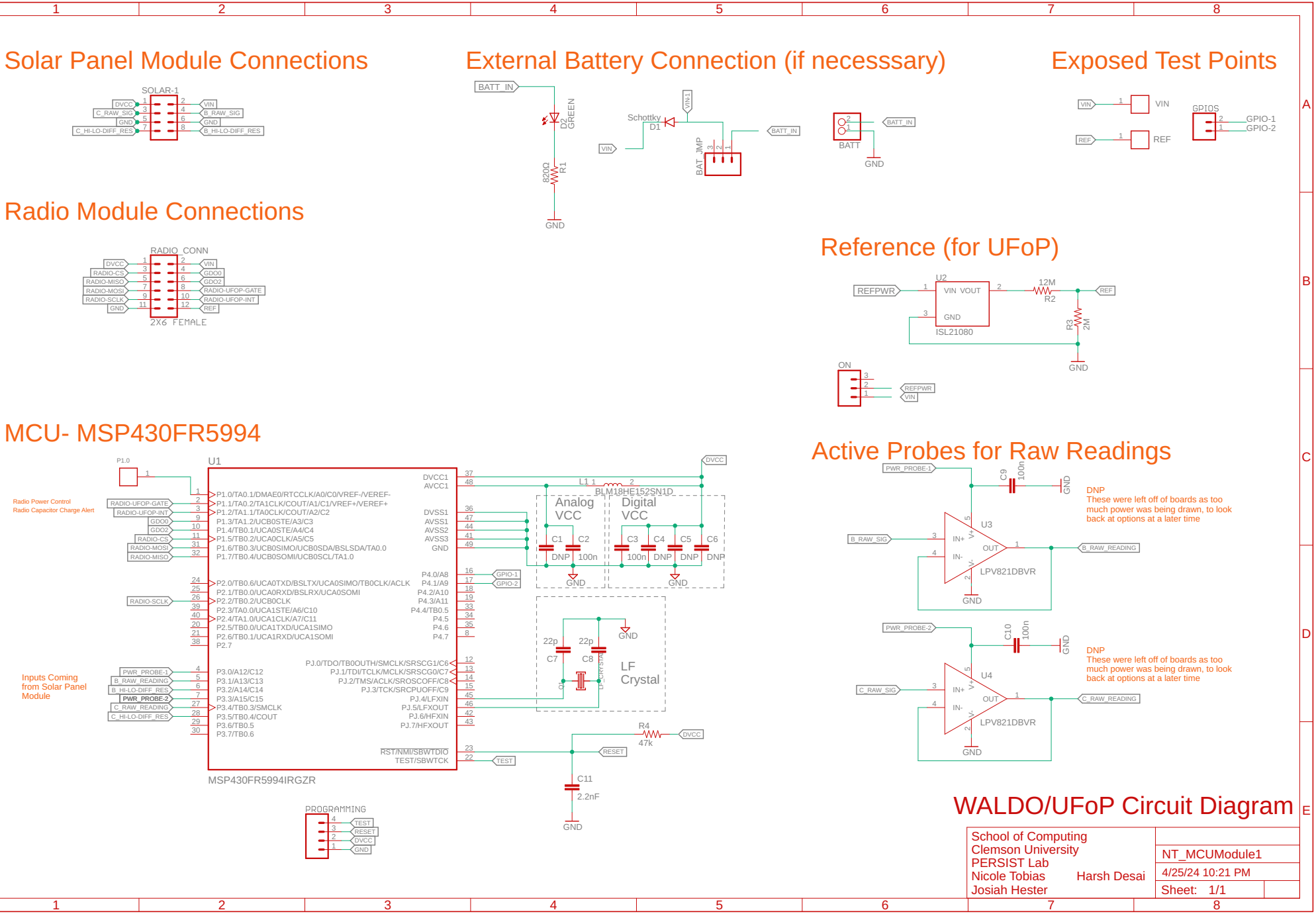
Solar Panel Module Connections
SOLAR-1
DVCC
C_RAW_SIG
GND
C_HI-LO-DIFF_RES
VIN
B_RAW_SIG
GND
B_HI-LO-DIFF_RES
External Battery Connection (if necesssary)
BATT_IN
D2 GREEN
820Ω R1
GND
Schottky D1
VIN
BAT_JMP
BATT
GND
Exposed Test Points
VIN
REF
GPIOS
GPIO-1
GPIO-2
Radio Module Connections
RADIO_CONN
RADIO-CS
RADIO-MISO
RADIO-MOSI
RADIO-SCLK
GDO0
GDO2
RADIO-UFOP-GATE
RADIO-UFOP-INT
2X6 FEMALE
Reference (for UFoP)
REFPWR
U2
VIN VOUT
GND
ISL21080
12M R2
R3 2M
REF
GND
ON
REFPWR
VIN
MCU- MSP430FR5994
U1
P1.0
Radio Power Control
Radio Capacitor Charge Alert
Inputs Coming from Solar Panel Module
DVCC
L1 BLM18HE152SN1D
Analog VCC
Digital VCC
C1 C2 C3 C4 C5 C6
DNP 100n 100n DNP DNP DNP
GND
GPIO-1
GPIO-2
22p C7
22p C8
LF Crystal
R4 47k
RESET
TEST
C11 2.2nF
MSP430FR5994IRGZR
PROGRAMMING
Active Probes for Raw Readings
PWR_PROBE-1
C9 100n
B_RAW_SIG
U3
IN+
IN-
OUT
LPV821DBVR
B_RAW_READING
DNP
These were left off of boards as too much power was being drawn, to look back at options at a later time
PWR_PROBE-2
C10 100n
C_RAW_SIG
U4
C_RAW_READING
WALDO/UFoP Circuit Diagram
School of Computing
Clemson University
PERSIST Lab
Nicole Tobias
Harsh Desai
Josiah Hester
NT_MCUModule1
4/25/24 10:21 PM
Sheet: 1/1