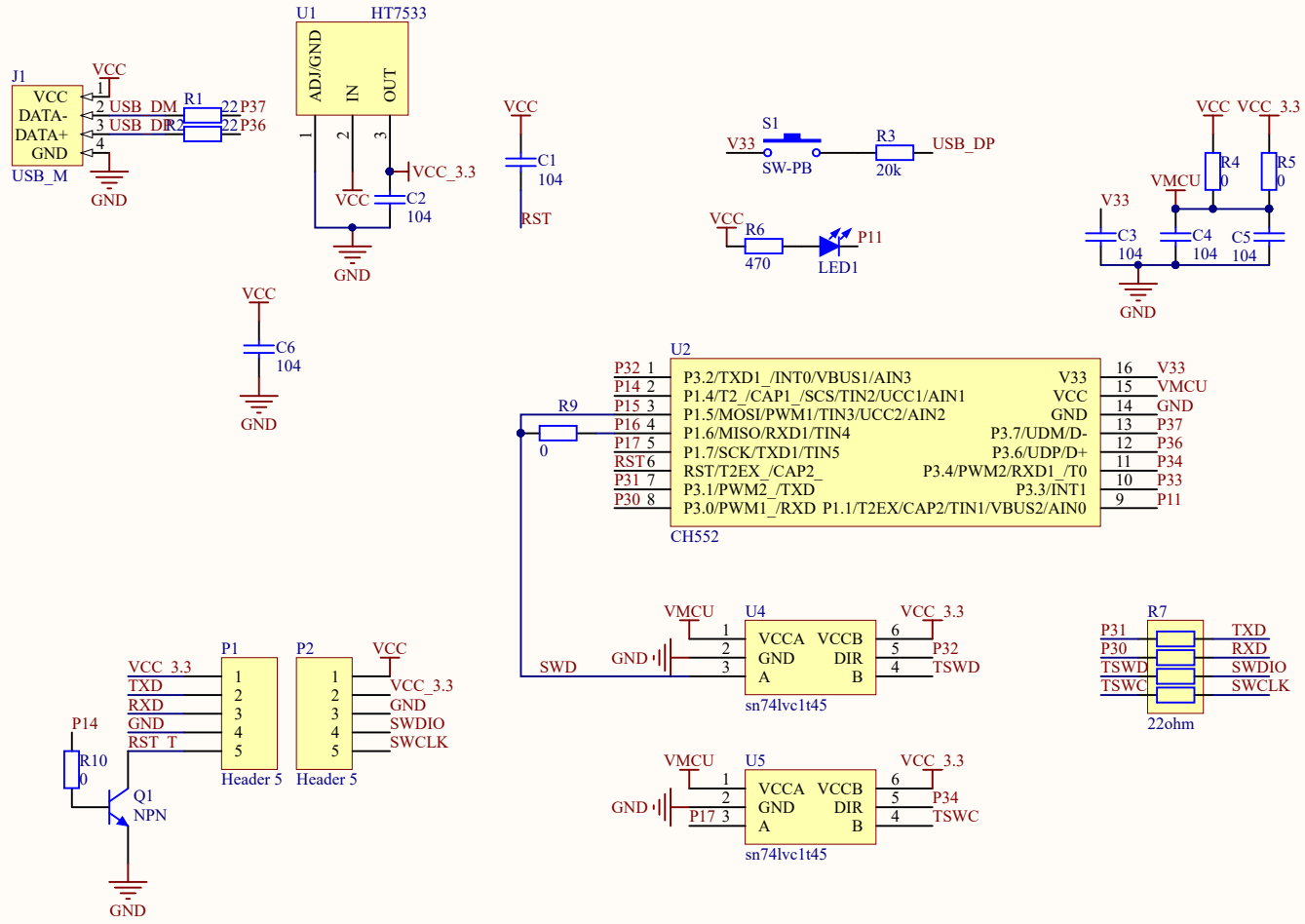

Title		
Size A4	Number	Revision
Date: 2022/2/6	Sheet of	
File: E:\AltiumDesigner14Lib\..\CH552.SchDoc	Drawn By:	

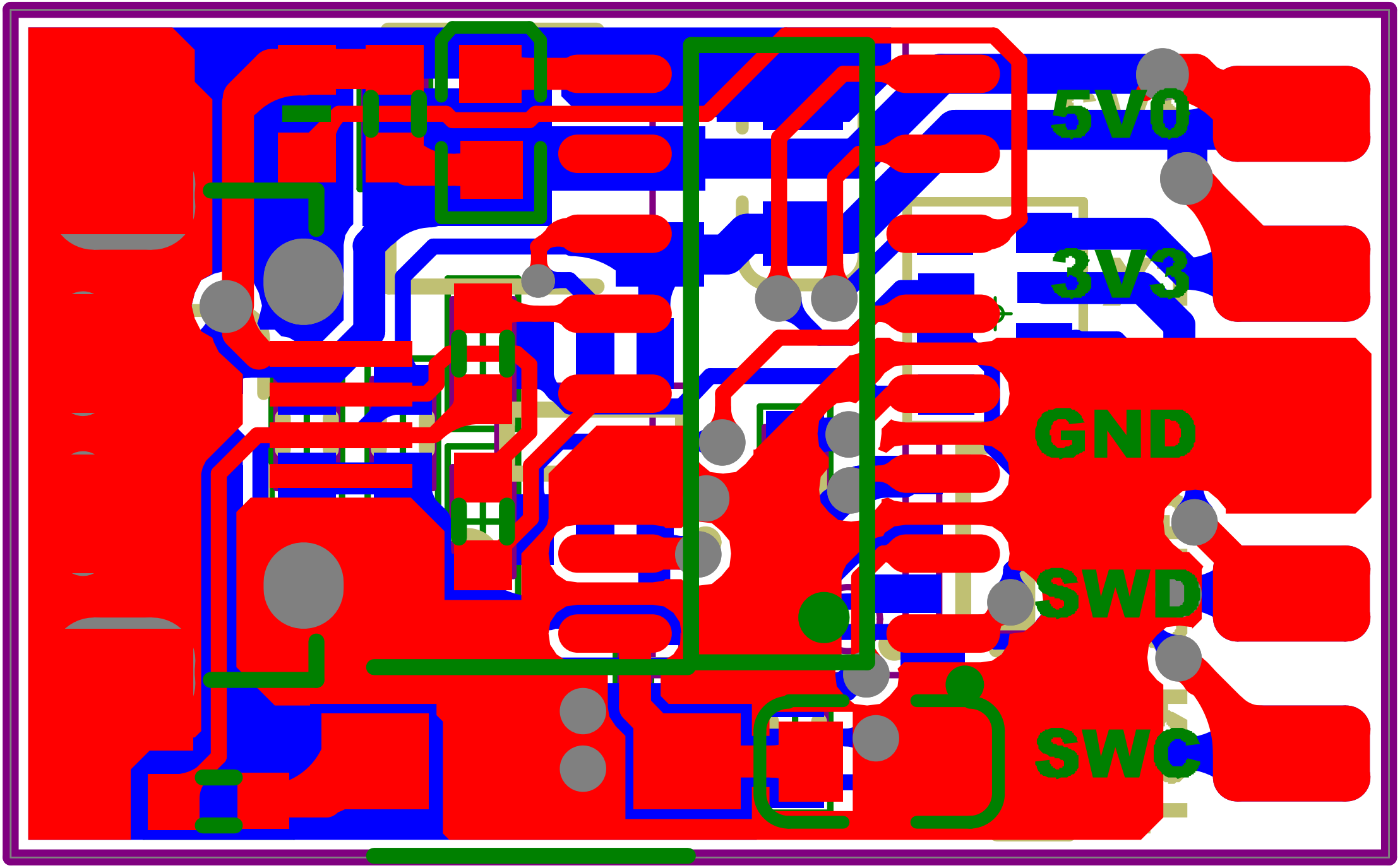
5V0
3V3
GND
SWD
SWC