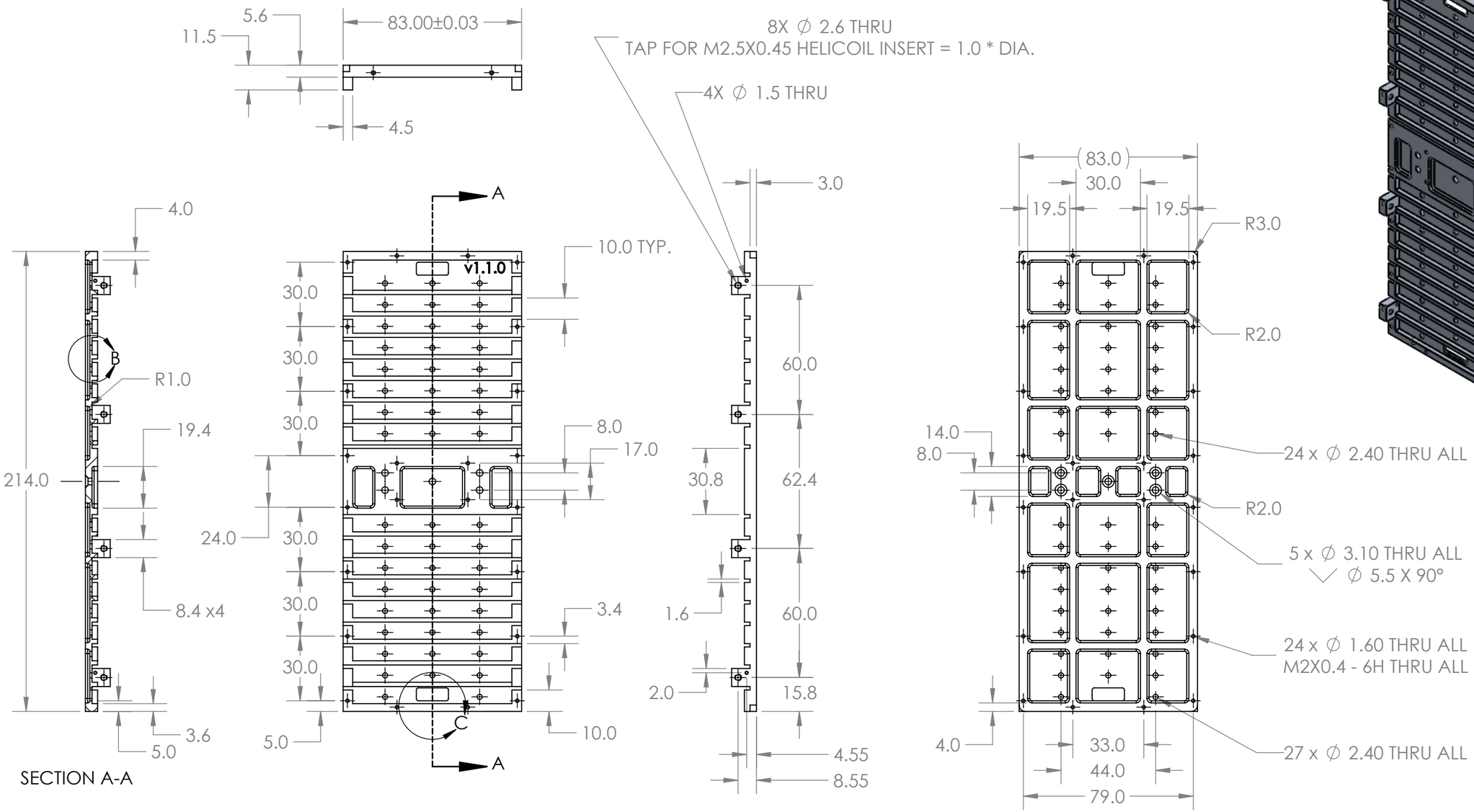

	NAME	DATE
DRAWN		
CHECKED		
ENG APPR.		
MFG APPR.		

Description: Y Frame

UNLESS OTHERWISE SPECIFIED:
DIMENSIONS ARE IN MILLIMETERS
TOLERANCES:
ONE PLACE DECIMAL ±0.1
TWO PLACE DECIMAL ±0.01

MATERIAL
FINISH
WEIGHT
DO NOT SCALE DRAWING

COMMENTS:

DWG. NO.

REV | SIZE B | SCALE: 1:2 | SHEET 1 OF 1

SOLIDWORKS Educational Product. For Instructional Use Only.