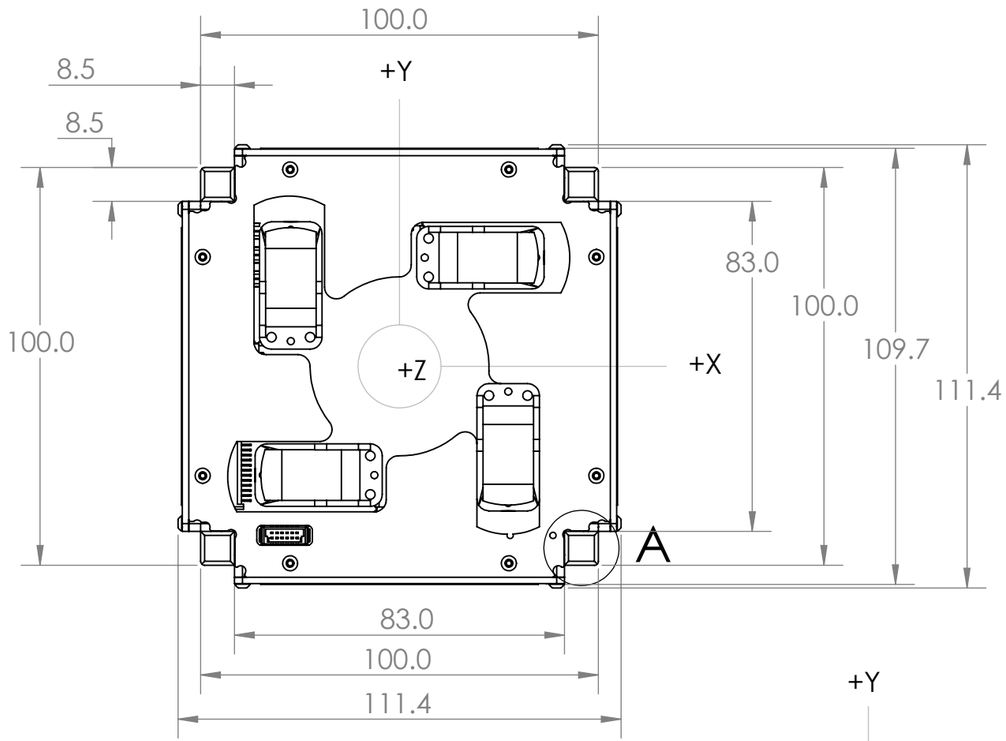

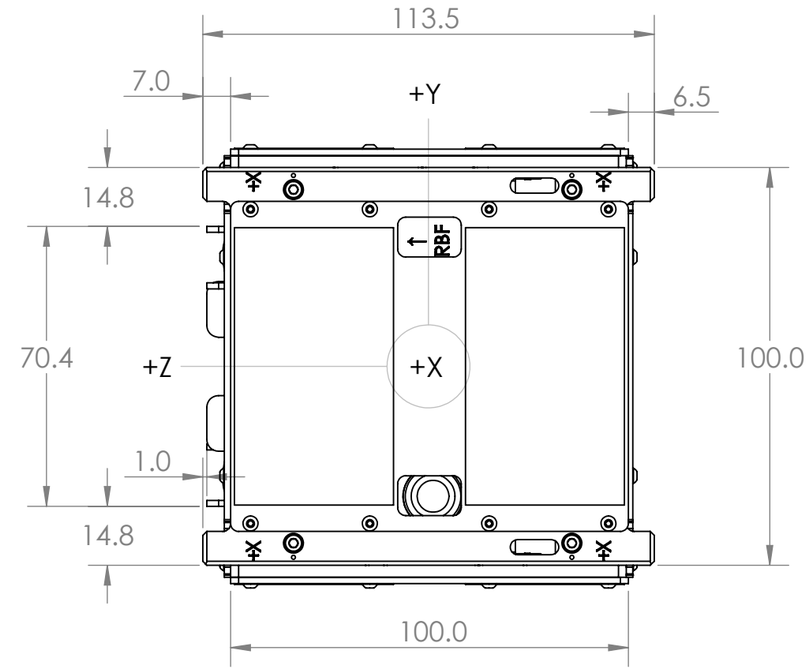

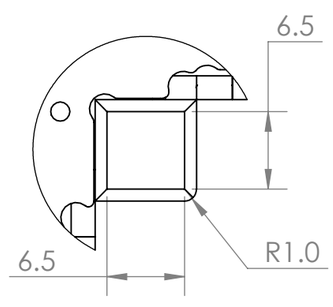

DETAIL A
SCALE 2 : 1

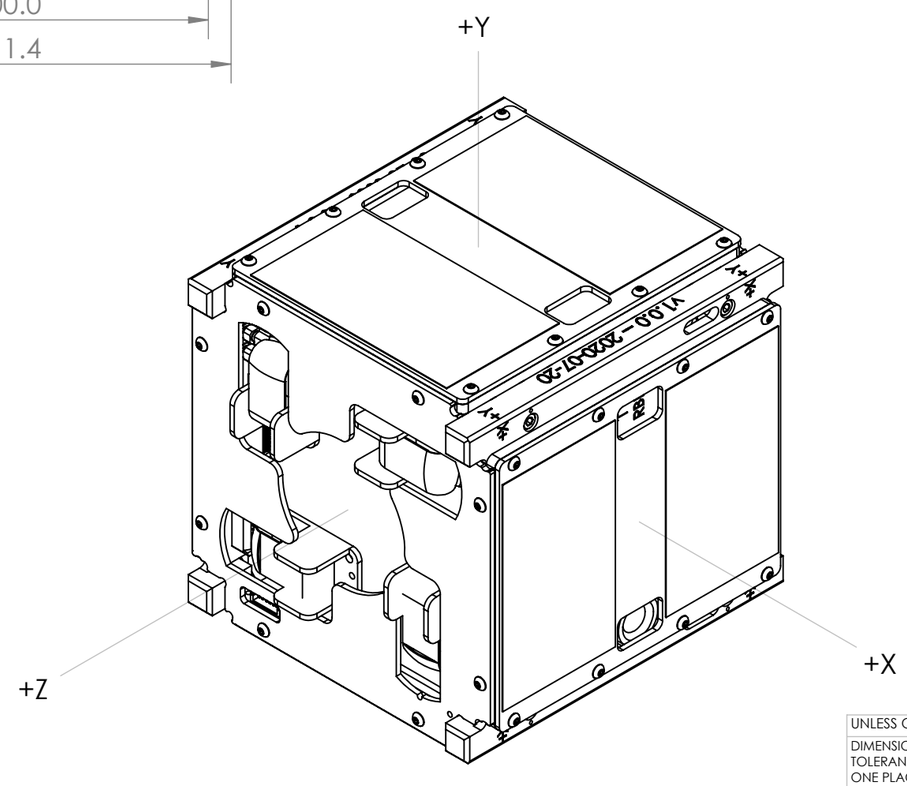

REVISIONS				
ZONE	REV.	DESCRIPTION	DATE	APPROVED
	A	INITIAL RELEASE	7/26/2020	EG

	NAME	DATE
DRAWN	EMILIO GIZZI	7/26/2020
CHECKED	-	7/26/2020
ENG APPR.		
MFG APPR.		

Description:

ORESAT0 V1.0.0 2020-07-20

UNLESS OTHERWISE SPECIFIED:
DIMENSIONS ARE IN MILLIMETER
TOLERANCES:
ONE PLACE DECIMAL ±0.1
TWO PLACE DECIMAL ±0.01

MATERIAL -
FINISH -
WEIGHT (REF)
DO NOT SCALE DRAWING

COMMENTS:

DWG. NO. OreSat0_CDS

REV A | SIZE B | SCALE: 2:3 | SHEET 1 OF 1

SOLIDWORKS Educational Product. For Instructional Use Only.