ECE 1000 Explorations in ECE

Lab 2: DC Circuits

Voltage Divider, Current Divider, and LED (Adjustable) Circuits

February 23rd, 2026

Dr. Charles Van Neste ~ cvanneste@tntech.edu

JC Williams ~ jcwilliams@tntech.edu

Introduction:

This lab session explores the fundamental concepts of direct current (DC) circuits, focusing on voltage dividers, current dividers, and Light Emitting Diode (LED) circuits. The voltage divider circuit is a fundamental circuit in which the output voltage is a specific fraction of the input voltage, determined by the resistance within the circuit. In contrast, the current divider circuit, while maintaining a constant voltage across its resistors, illustrates how the total current is distributed throughout the circuit, where the output current is a fraction of the input current. Additionally, this lab showcases practical applications of these principles through LED circuits. In these circuits, the behavior of the LEDs is governed by adjusting the circuit's resistance which influences the current through the device. In this lab, students will engage in the construction, simulation, and analysis of these circuits. The aim of this lab is to provide a hands-on understanding of how component values influence the behaviors of these DC circuits.

Project Objectives:

The following are the objectives for the second ECE 1000 lab:

DURING LAB:

- Read through part 1 of this handout for background information on the operation of the circuits.
- Following part 2 of the handout, install and set up the LTSpice circuit simulation software (If you haven't already).
- Following part 3 of the handout, simulate the following circuits which were described in part 1:
    - Voltage Divider
    - Current Divider
    - LED (Simple LED and Adjustable LED)
- Following part 4 of the handout, build the circuits instructed with the specific circuit values at your lab stations.
- Following part 5 of the handout, complete the after-lab assignment. An example of the format for the assignment and how to answer the questions will be posted to ILearn.
- Remember, Dr. V and JC will be available throughout the lab and outside of class for questions.

Part 1 - Background Information:

Resistors are components designed to introduce *resistance* into an electrical circuit. Resistance is the measurement of how strongly a material opposes, or *resists*, the flow of electrical current when subjected to a voltage. When resistors are added to an electrical circuit, their resistance is measured in the unit Ohms (**Ω**). Mathematically, the resistance of the device is defined using Ohm's Law, which describes the relationship between the current through a device and the voltage applied to its terminals, shown in equation 1.

Equation 1: Resistance: $\boldsymbol{R = \frac{Voltage\ (V)}{Current\ (I)} = \frac{Volts}{Amps} = Ohms = \Omega}$

Diodes and Light Emitting Diodes (LEDs) are specialized *semiconductor* devices used in electrical circuits. A diode is designed to allow current to flow easily in one direction while significantly hindering flow in the opposite direction, acting as a one-way valve for electric current. LEDs are a specific type of diode that emit light when current flows through them, functioning as both an electronic component and a light source. A key feature of diodes is their 'forward voltage' - a specific threshold voltage needed to 'turn on' the diode and allow significant current to flow through it. For LEDs, this forward voltage is also the point at which they begin to emit light. It varies depending on the LED's color and type, typically ranging from about 1.8V to 3.3V. In simple LED circuits, it's crucial to provide sufficient voltage to meet or exceed this threshold while controlling the current to prevent damage to the LED. Often, a resistor is used in series with the LED to limit the current.

Potentiometers are simple, adjustable voltage dividers widely used in electronics to control factors such as volume or brightness. They feature a movable wiper that slides along a resistive element, altering the resistance and thus changing the voltage output. This adjustability makes potentiometers ideal for fine-tuning electrical parameters in a variety of devices. In LED circuits, for instance, they are particularly useful for adjusting the brightness of the LEDs by varying the current flowing through them.

Circuit 1: Voltage Divider:

The first circuit explored in lab 1 is the Voltage Divider. A simple voltage divider circuit consists of two types of components: a voltage source and resistors. The voltage source applies an electric potential to one terminal of a resistor which results in the flow of electric current. As previously mentioned, resistors oppose the flow of current. When multiple resistors are connected in series, with the first resistor connected to the voltage source and the following resistors connected in sequence, the voltage applied to each subsequent resistor decreases. This phenomenon is known as a voltage drop. Therefore, in this circuit, the output voltage, or the measurement of voltage at a later point in the electrical circuit, will have a lower value than the voltage source. The values of the resistors in the electrical circuit are directly responsible for the voltage drop, and the ratio of their resistance to the supplied input voltage creates a *division*; hence, the circuit is known as a voltage divider.

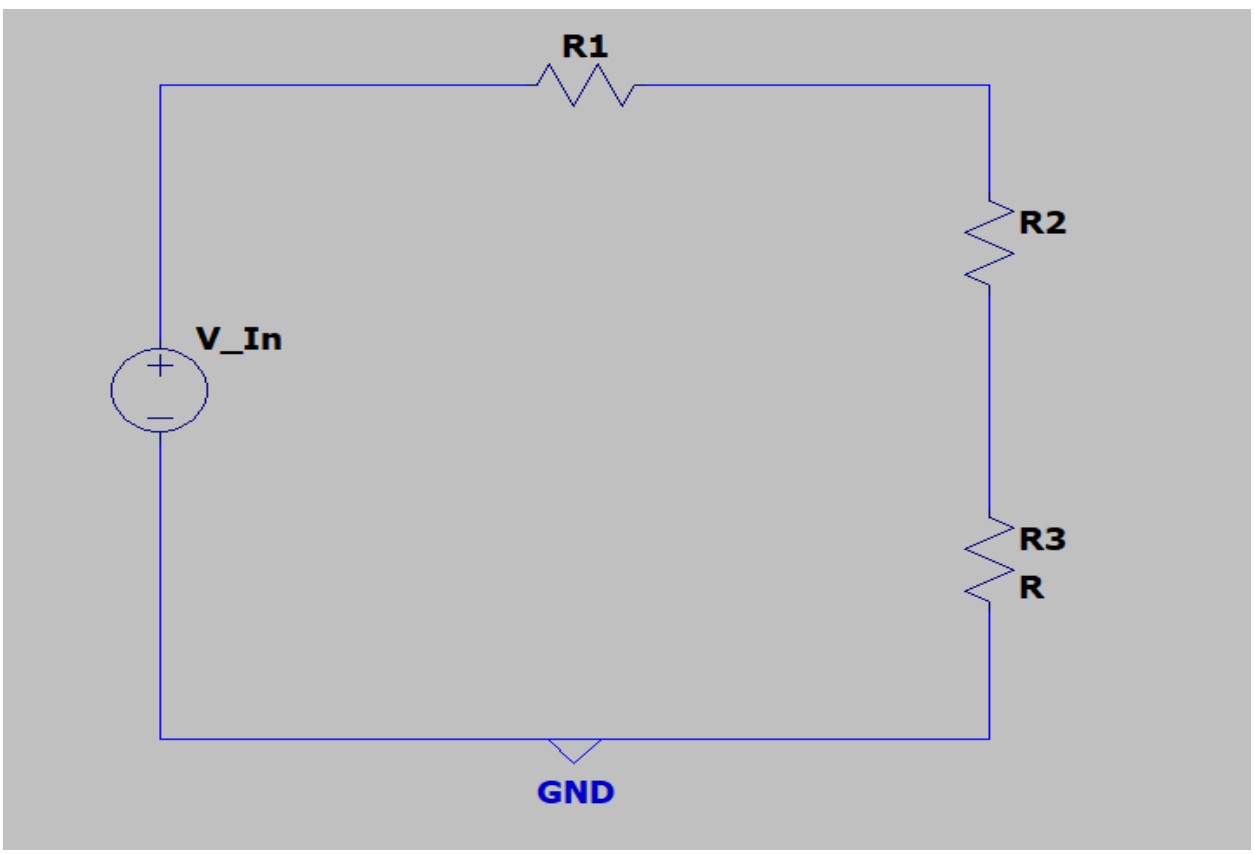

Fig. 1. Voltage Divider Circuit

Circuit 2: Current Divider:

The next circuit explored in lab 1 is the Current Divider. This circuit, like the voltage divider circuit, consists of two types of components: a voltage source and resistors. In a current divider circuit, all the resistor components in the circuit are connected in parallel, meaning that the terminals of each resistor are linked to the same points, or nodes. When multiple resistors are connected in parallel, the current flows into the node and then branches out into the various circuit paths. If the resistor values differ for each component, the current in each respective branch will vary from the others. Using this circuit, the output current, or the measurement of the current through one of the resistors in the circuit, will have a smaller value than the source. Like the voltage divider circuit, the values of the resistors in the electrical circuit are directly responsible for the current drop, and the ratio of their resistance to the supplied input creates a sort of *division* of the input; hence, the circuit is known as a current divider.

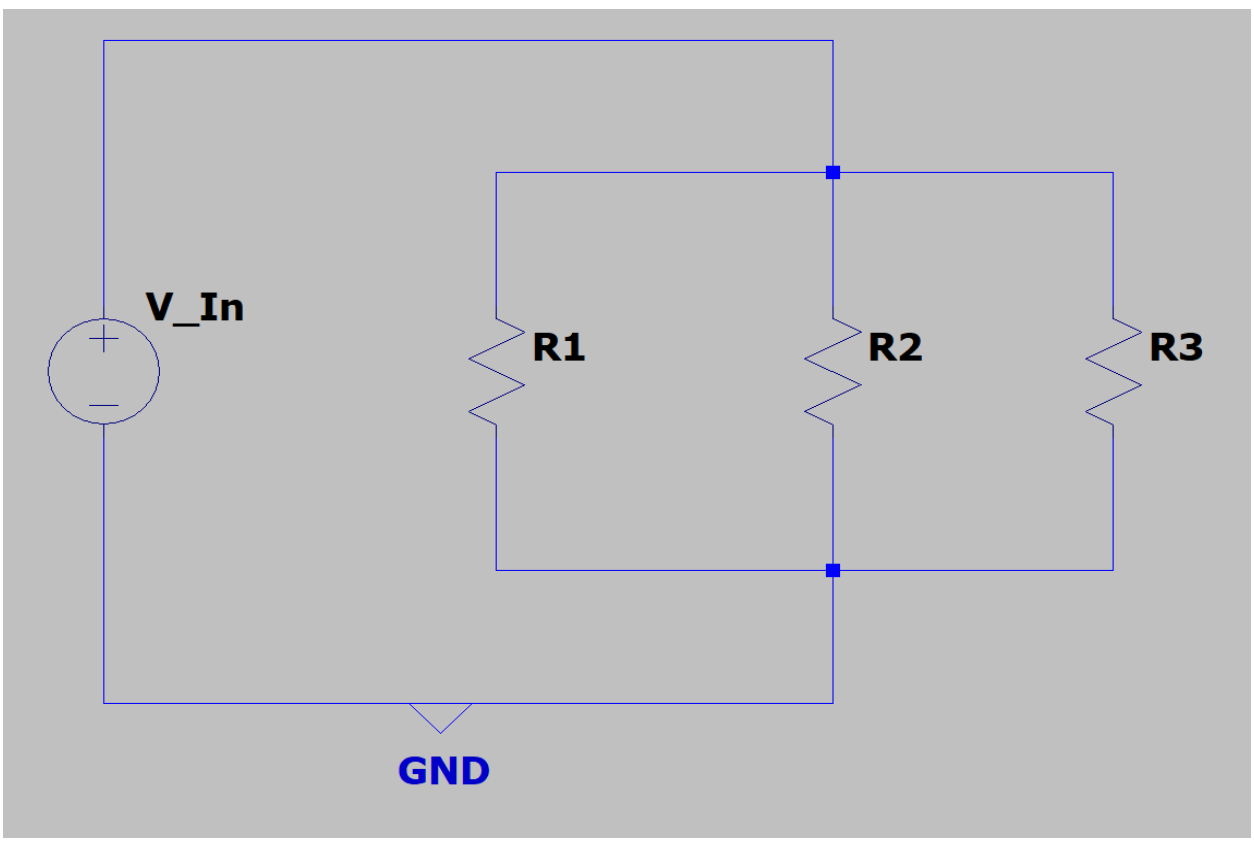

Fig. 2. Current Divider Circuit

Circuit 3: Simple LED Circuit:

The next circuit explored in lab 1 is a simple LED circuit. This circuit consists of a voltage source, a resistor, and a light emitting diode (LED). In a simple LED circuit, a resistor is placed in *series,* between a voltage source and a LED. This series connection is crucial as the resistor acts to limit the current flowing through the LED, protecting it from a potential over surge supplied to the LED. The resistor, with its known resistance value, ensures that the current stays within a safe range for the LED. This is particularly important because LEDs have a maximum current rating, and exceeding this rating can quickly lead to overheating and damage. In this simple circuit, the resistor plays a pivotal role in controlling the voltage drop and current, ensuring the LED operates safely and efficiently. By changing the resistor value of the circuit, the current through the LED will also change, thus creating a different brightness level for the device.

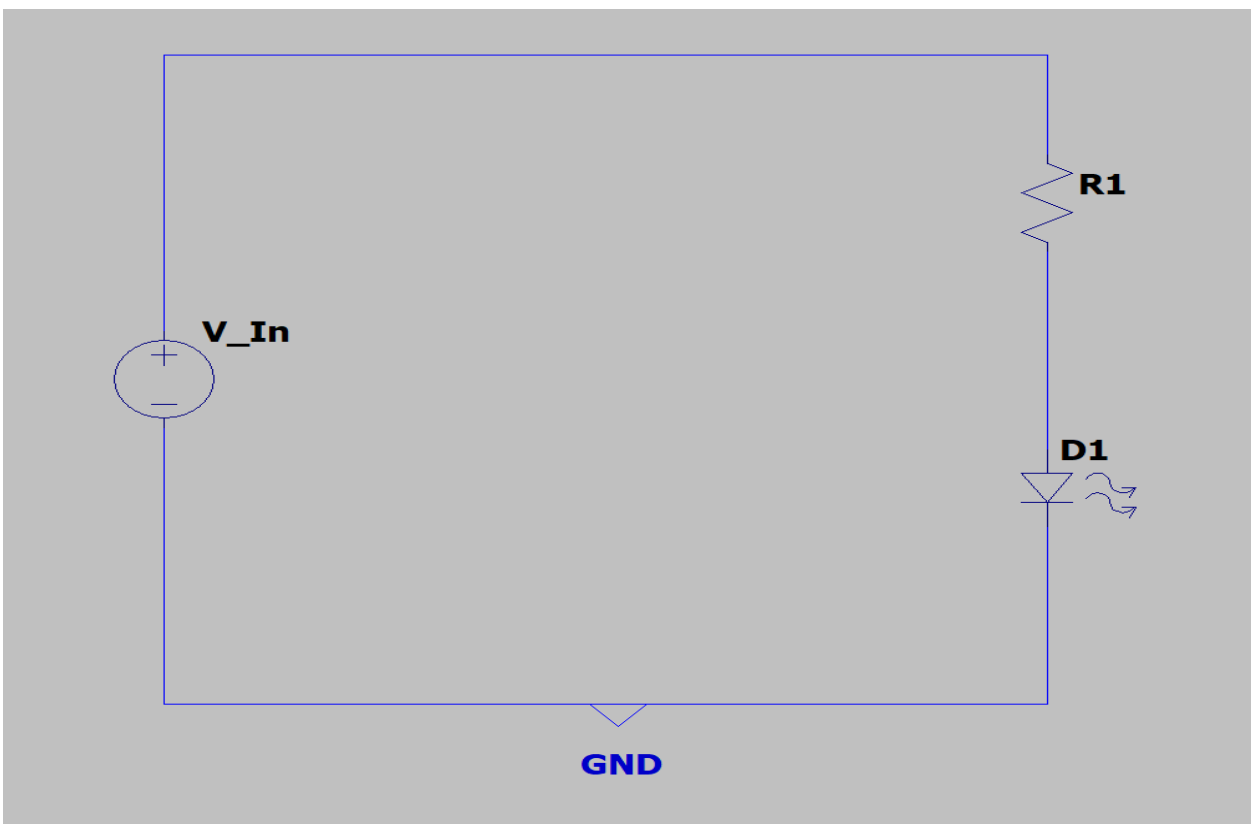

Fig. 3. Simple LED Circuit

Circuit 3: Adjustable LED Circuit:

The final circuit explored in Lab 1 is an adjustable LED circuit. This circuit consists of a voltage source, a potentiometer, a resistor, and a light emitting diode (LED). In an adjustable LED circuit, a potentiometer is included to vary the total resistance in the circuit, thereby changing the current flowing through the LED. The potentiometer is modeled as an additional resistor in the circuit. By varying the value of the potentiometer, the brightness of the LED can be adjusted. The current through the potentiometer and the second resistor is the same, as their combined resistances make up the total resistance of the circuit. When the resistance of the potentiometer is set to zero (turned all the way counterclockwise), the total resistance of the circuit equals the resistance of the second resistor. Conversely, when the potentiometer resistance is set to its maximum (turned all the way clockwise), the total resistance becomes very large, being the sum of the potentiometer and the second resistor. Therefore, turning the potentiometer counterclockwise **increases** the current through the LED; while turning it clockwise **decreases** it. The second resistor acts as a current-limiting resistor, protecting the LED from an over surge of current.

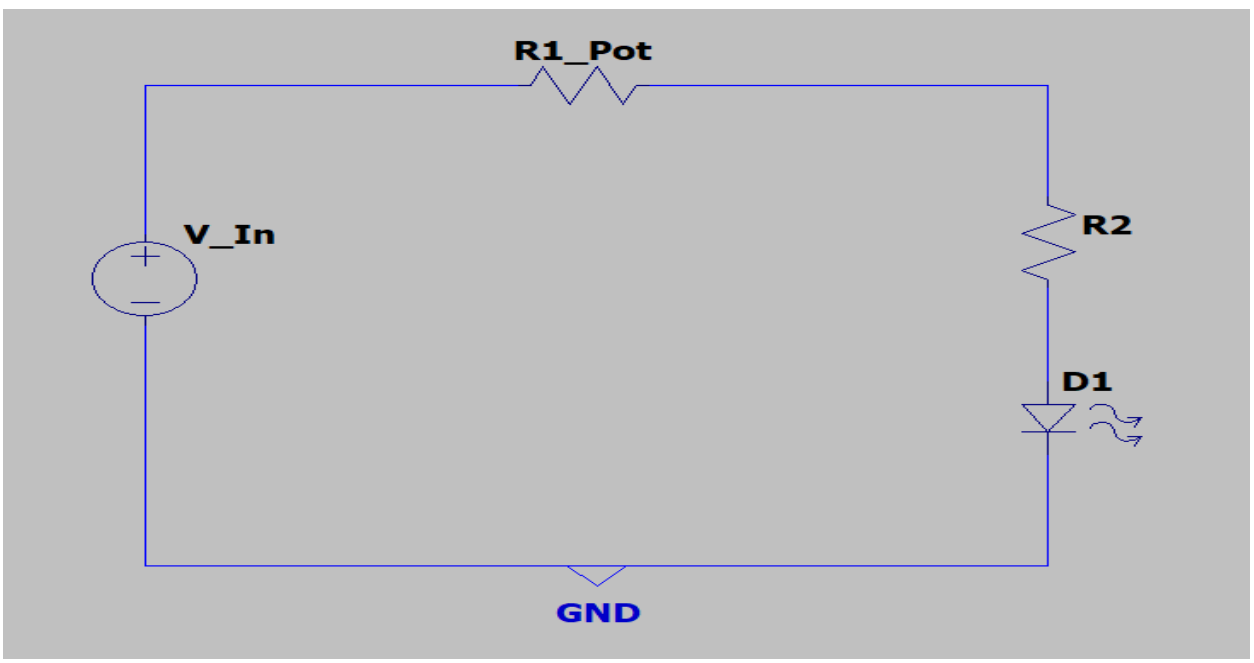

Fig. 4. Adjustable LED Circuit

Part 2: LTSpice Software Installation and Setup:

Step 1 (Installing LTSpice and Creating Your First LTSpice Simulation File):

- Open your preferred browser and go to the following link:

  https://www.analog.com/en/design-center/design-tools-and-calculators/ltspice-simulator.html

- If using a Windows machine, click on "Download for Windows 10 64-bit and forward .
- If using a Mac machine, click on "Download for MacOS 10.15 and forward.
- Run the downloaded file and step through all instructions (optional to include desktops shortcuts)
- Once the software has finished installing, create a new folder on your desktop.
  - Example: "ECE_1000_LTSpice_Simulations"
- Open the LTSpice software.
- From the LTSpice home screen, click **"File"** and then **"New Schematic".**
- Then, in the newly opened file titled "Draft1.asc", click "**File"** and then "**Save As"**, and then save the simulation file (with the new name you want) in the file previously created on your desktop.
    - Example File Path:

      C:\Users\19315\Desktop\ECE_1000_s26\LTSpice_Simulation_v1.asc
- Now you are ready to start simulating your electrical circuits in LTSpice!
- LTSpice is a circuit simulation software that allows you to examine many different circuit behaviors and parameters.
- EE's and CompE's often use LTSpice due to its simple learning curve and the availability of its users to design their own custom circuit components.
  - Not only are there circuit component libraries included with the base version of the software, **but** users can also design and operate their own custom circuit components.

Step 2 (The LTSpice Toolbar ~ Editing Your First Schematic):

- Once you have created a draft.asc file in LTSpice and saved it with your specific file name, the following tool bar will appear, allowing you to begin designing your circuit schematic.

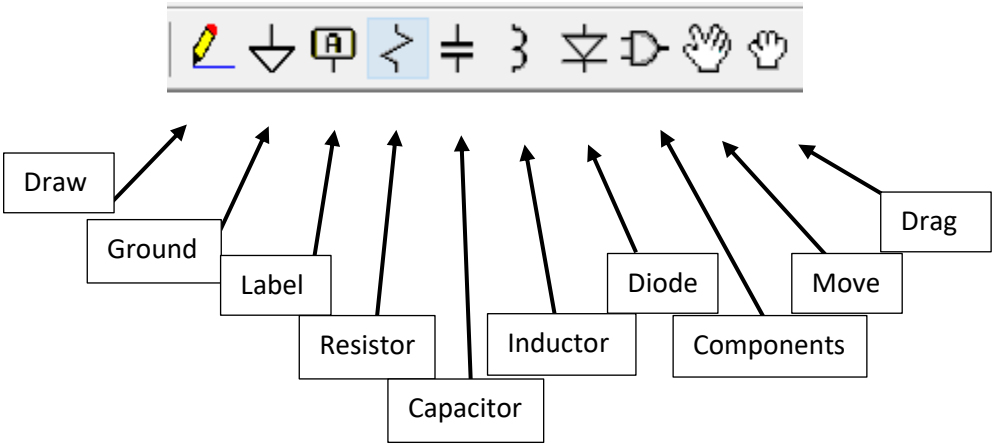

- Draw: This tool is what you used to draw the wires to connect the circuit components.
- Ground: This is the reference point for the circuit analysis and must be included on each schematic.
- Label: This tool allows you to label different nodes of a circuit.
- Resistor: this is the button to insert a resistor.
- Capacitor: this is the button to insert a capacitor.
- Inductor: this is the button to insert an inductor
- Diode: this is the button to insert a diode.
- Components: this is the button to open the available components in LTSpice for your schematic
- Move: this allows you to select components and move them or change their orientation.
- Drag: this allows you to drag components while they are still connected to the rest of the circuit.
- Cut: This is the scissor icon to the left of the other tools pictured above, allowing you to delete.
- For mac users the wire, component, and label tools can be found when you right click with two fingers on the touch pad then select draft. The delete and move tools can be found under the edit tab. Press g while on the schematic page to place a ground on the circuit.

Part 3: LTSpice Circuit Simulations:

Step 1 (Simulating a Voltage Divider Circuit):

- For our first simulation, we want to simulate the simple voltage divider circuit.
- The voltage divider circuit will have a 5 V voltage source and three resistors connected *in series* with the following values: 510 Ohms, 1.2 kOhms, and 2 kOhms. (k ~ 1000 Ohms).
- First, to insert the voltage source, click on the components button and scroll until you find the word *voltage*, or search *voltage* in the search menu.
- Next, insert the resistors by either clicking on the resistor button or by holding down the key *ctrl* and pressing *R* on the keyboard.
- To add component values to the resistors, right click with your mouse on the component and type the number that you desire ("510" for 510 Ohms, "1.2k" for 1.2 kOhms, and "2k" for 2 kOhms).
    - NOTE for MacOS: Two-finger click on the component to open the box to enter values.
- If you need to move the components, you can click on the *move* button and rearrange the parts.
- To connect the components, click the *draw* button and draw the appropriate lines connecting the terminals of the components (you can use the circuit schematics in part 1 for reference, as they were all created using LTSpice).
- Finally, using the *ground* button, place a ground symbol on the line between the last resistor and the negative terminal of the voltage source (again reference the circuits in part 1 if needed).
- To **simulate** the circuit, click on the *run* icon (looks like a person running). In the menu that opened, the tab selected should be titled *transient analysis*, which is the default option. Enter "1" for the stop time and "0" for the start time, starting the simulation, then stopping after 1 second.
- For MacOS users, click the touchpad with two fingers, then choose *draft*, and select *spice directive*. Then hit the *run* icon and follow the above prompts to produce the same results.
- For this circuit, we want to measure the voltage drop across each resistor.
- Figure 5 shows an example schematic of the voltage divider circuit.

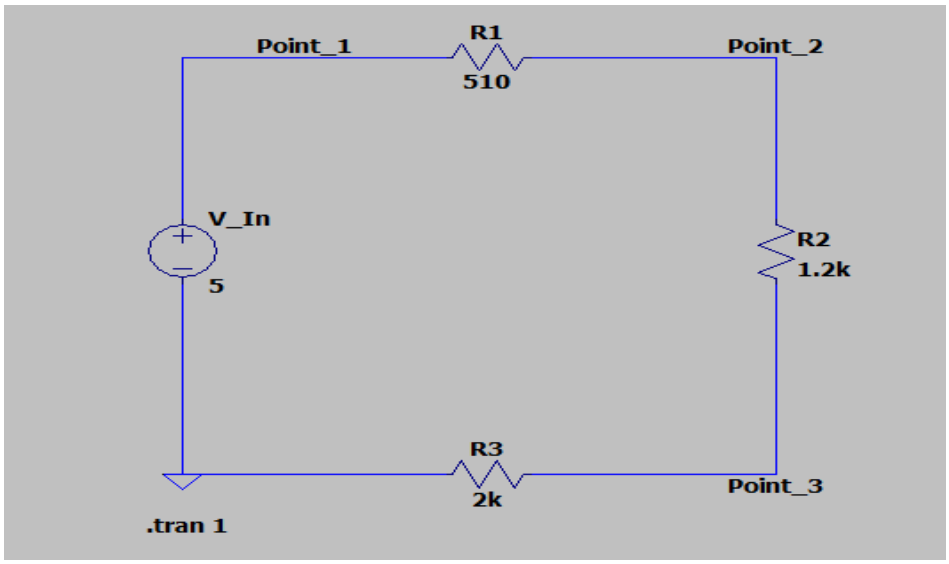

Fig. 5. LTSpice Voltage Divider Circuit with Values

- After entering the values and pressing "*OK*", a plot window will appear. The *X* axis will be the time (in seconds) and the *Y* axis will be whatever it is that is being measured.
- To measure the voltage drop across a resistor, left click and hold while you drag from the left side of the resistor to the right side of the resistor (the red probe will appear and then drag across the resistor until the probe turns black).
- Repeat this for the other resistors and then take a screenshot of the plot (Windows users can use "snipping tool"). The plot you produce should be like Figure 6.

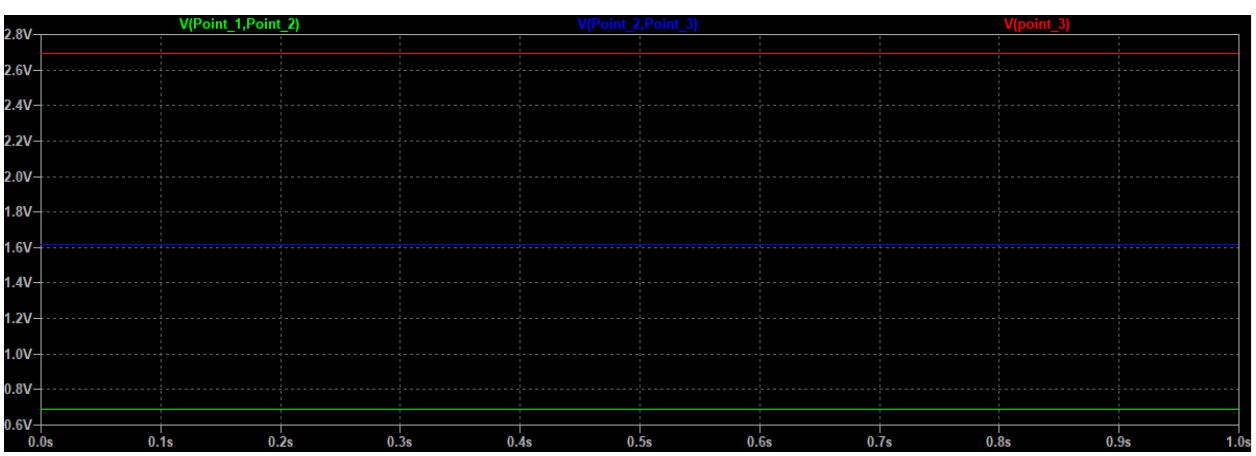

Fig. 6. LTSpice Voltage Drop Across Resistors

Step 2 (Simulating a Current Divider Circuit):

- For our next simulation, we want to simulate the simple current divider circuit.
- The current divider circuit, like the voltage divider circuit, will have a 5 V voltage source and three resistors connected *in parallel* with the same values as before.
- Following the same process as with the voltage divider circuit, implement the components and create your current divider schematic.
- Follow the same simulation setup as earlier, creating a *transient analysis* simulation.
- Figure 7 shows an example schematic of the current divider circuit.

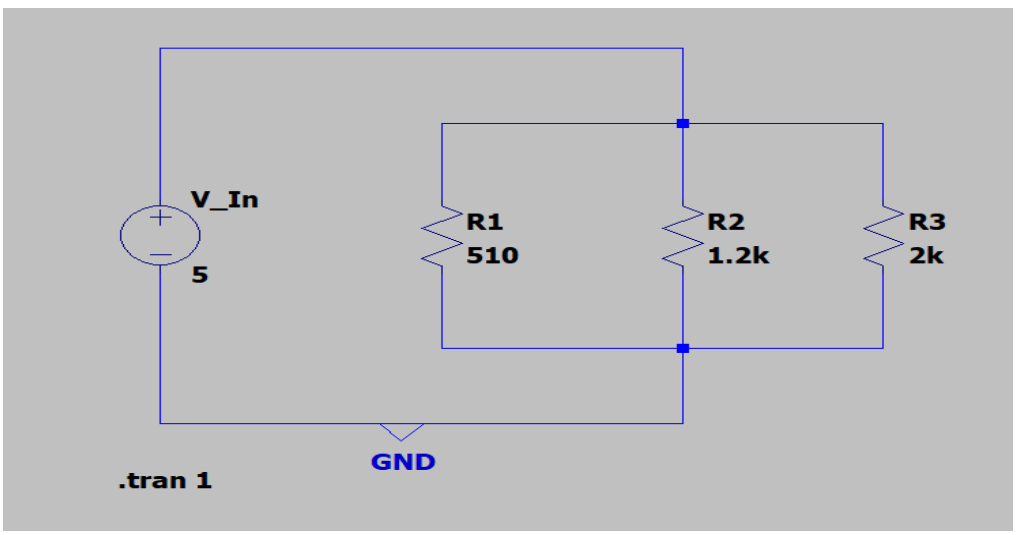

Fig. 7. LTSpice Current Divider Circuit with Values

- To measure the current through each resistor, hover your cursor over what you are measuring. When you see the tool below appear over the resistor, left click, and the current will be measured.

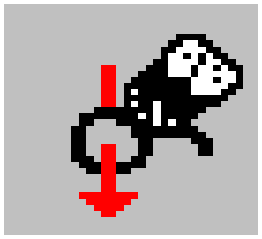

Fig. 8. LTSpice Current Probe Tool

- Repeat this for the other resistors and then take a screenshot of the plot (again using "snipping tool" or some other software). The plot you produce should be like Figure 9.
- Also, create another simulation plot measuring the voltage drop across the resistors. Since the resistors are arranged in *parallel*, the voltage drop should be equal across all the resistors.

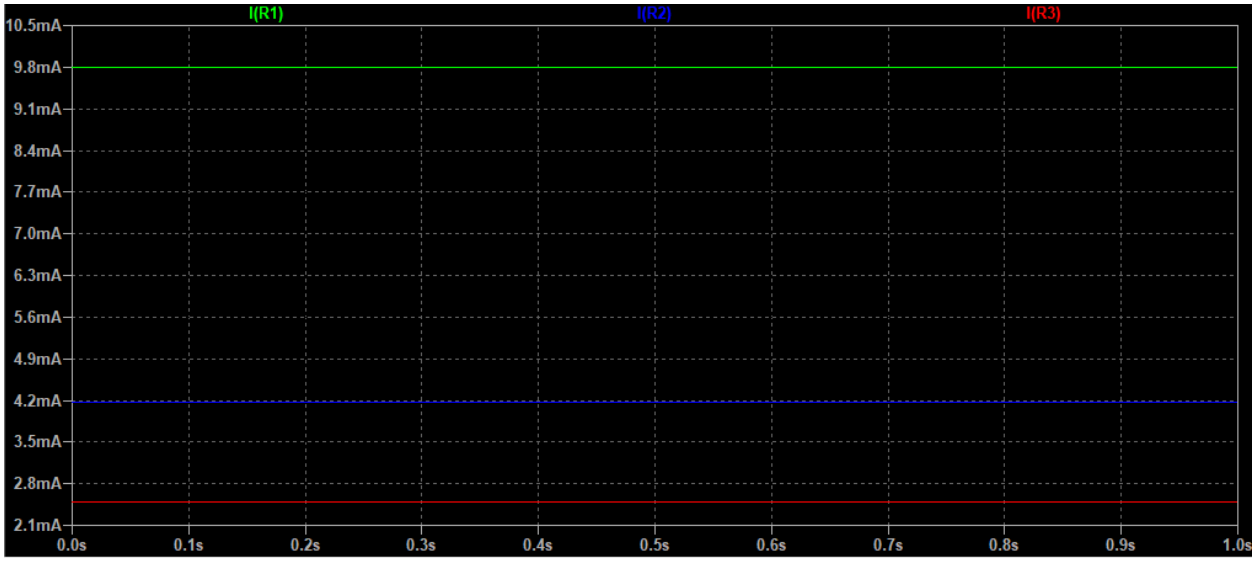

Fig. 9. LTSpice Current Through Resistors

Step 3 (Simulating a Simple and Adjustable LED Circuit):

- For our final simulation, we want to simulate a simple and adjustable LED circuit.
- The simple led circuit will have a 5 V voltage source, a 510 ohm resistor, and a "LED" (you can find this in the component menu by typing LED).
- Following the same process as the other circuits, implement the components and create your LED circuit.
- Follow the same simulation setup as earlier, creating a *transient analysis* simulation.
- Figure 10 shows an example schematic of the simple LED circuit.

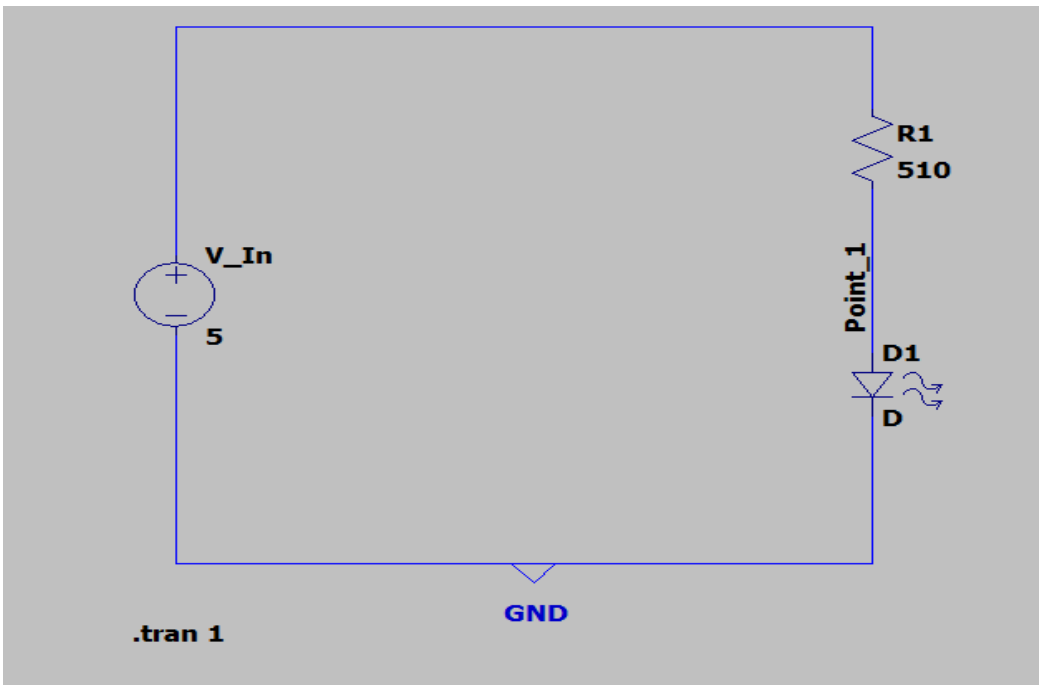

Fig. 10. LTSpice LED Circuit with Values

- First, measure the voltage at point 1, which is shown in Figure 10. This is the forward voltage of the LED, or the voltage at which the LED will "turn on".
- Next, measure the current through the LED, also known as the limited current from R1. You can measure both things at once, having a plot with one y-axis reading voltage and the other y-axis reading current. The plot you produce should be like Figure 11. Screenshot your plots.

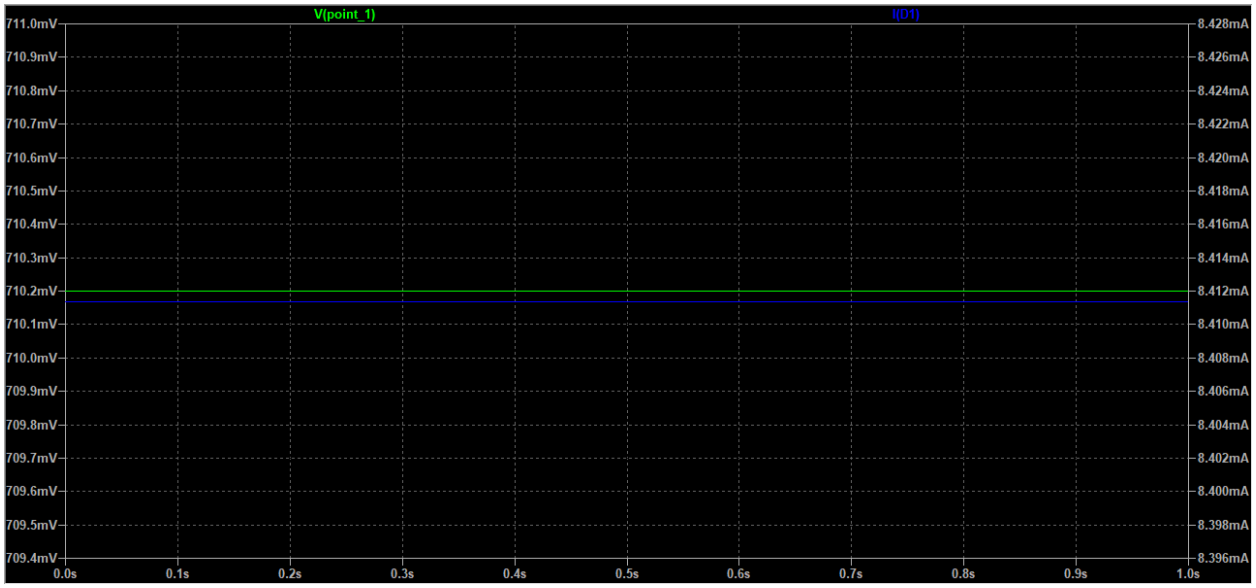

Fig. 11. LTSpice Voltage and Current Through LED

- Now, change the resistor value of R1 from 510 ohms to 220 Ohms and rerun your simulation. Capture images of your new plots, how does changing the resistance in the circuit affect the current flowing through the LED?

Part 4: Building the DC Circuits:

Step 0 (How to Use a Breadboard):

- A breadboard is an essential tool for prototyping and building electronic circuits without soldering. It allows for the creation of temporary electrical connections between components, allowing quick testing and modifications.
- Breadboards are user-friendly and have a straightforward layout:
    - Power Rails: Each side of the breadboard has positive (+) and negative (-) rails. On each side, all the (+) holes are interconnected, and all the (-) holes are interconnected. However, the (+) and (-) rails are **NOT** connected to each other.
    - Terminal Strips: The rows of holes running **horizontally** across the breadboard are electrically connected. However, these horizontal rows are **NOT** connected to the rows above or below them.
    - Central Divide: The central trench of the breadboard signifies a complete separation between the two halves. A jumper wire is needed to create a connection across the trench.
    - See Figure 12 for a visual.

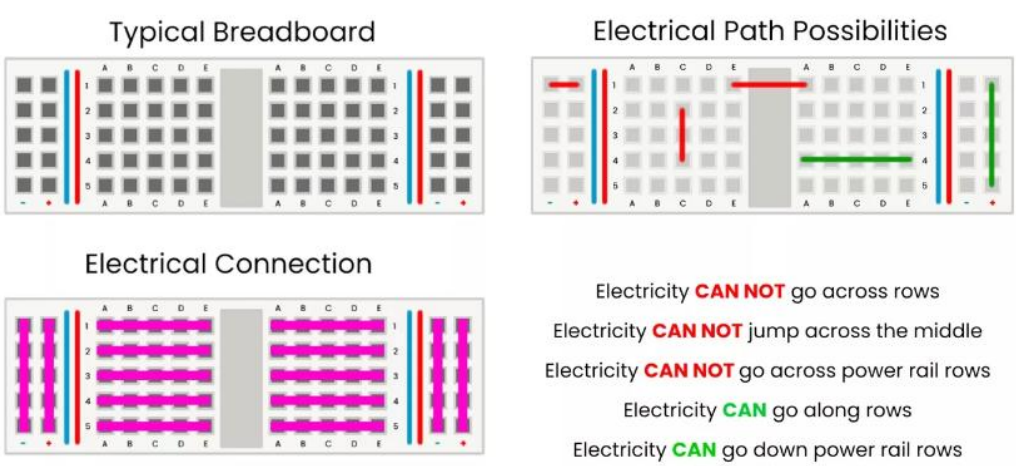

Fig. 12. Breadboard Electrical Connections

Step 1 (Building a Voltage Divider Circuit):

- Using the circuit schematic shown in Figure 1, build a voltage divider circuit using the following components:
    - Voltage source (9 Volts)
    - Resistor 1 (330 Ohms)
    - Resistor 2 (1.5 kOhms)
    - Resistor 3 (3.3 kOhms)
- Using the multi-meter, measure the voltage drop across the resistors R1, R2, and R3. Record these values so that you can put them into a table.
    - Voltage drop is measuring from one terminal of the resistor to the other. Connect the positive lead to one side of the resistor and the negative lead to the other.

Step 2 (Building a Current Divider Circuit):

- Using the circuit schematic shown in Figure 2, build a current divider circuit using the following components:
    - Voltage source (9 Volts)
    - Resistor 1 (330 Ohms)
    - Resistor 2 (1.5 kOhms)
    - Resistor 3 (3.3 kOhms)
- Using the multi-meter, measure the current through the resistors R1, R2, and R3. Record these values so that you can put them into a table.
    - The current through a resistor is measured by connecting the positive lead of the multimeter to the end of the resistor, then connecting the negative lead of the multimeter to ground. See Figure 13 for an illustration.

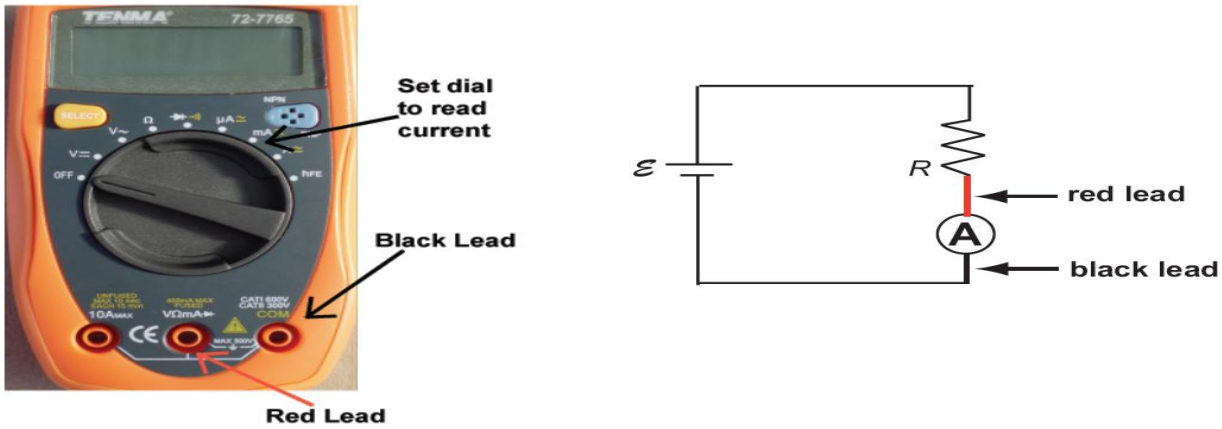

Fig. 13. Measuring Current with a Multimeter

<u>Step 3 (Building a Simple LED Circuit):</u>

- Using the circuit schematic shown in Figure 3, build a simple LED circuit using the following components:
    - Voltage source (9 Volts)
    - Resistor 1 (330 Ohms)
    - LED
- Using the multimeter, measure the voltage across the LED and measure the current through the LED. Record these values so that you can put them into a table later.
- See Figure 14 for how to connect a LED (the longer leg goes towards R1)

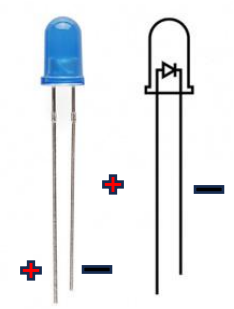

Fig. 14. LED Pinout

Step 4 (Building an Adjustable LED Circuit):

- Using the circuit shown in Figure 4, recreate the design and build an adjustable LED circuit using the following components:
    - Voltage source (9 Volts)
    - Potentiometer (10k Ohms)
    - Resistor 1 (330 Ohms)
    - LED
- See Figure 16 and Figure 17 for the pinout of the potentiometer and how it connects.
- Turn the potentiometer all the way to the right and using the multi-meter, measure the current through the LED. Then, turn the potentiometer all the way to the left and using the multi-meter, measure the current through the LED. Record these values so that you can put them into a table.

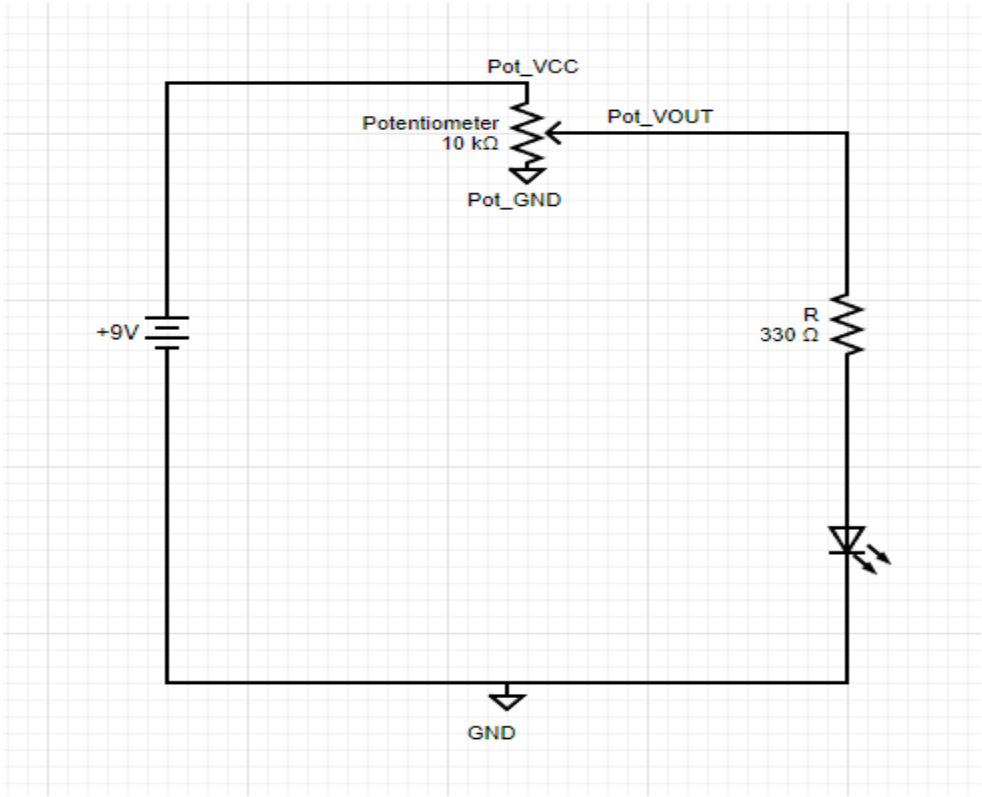

Fig. 15. Adjustable LED Circuit

Fig. 16. Adjustable LED Circuit

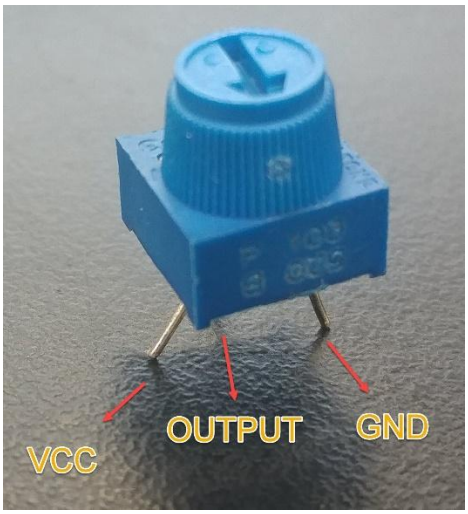

Fig. 17. Potentiometer Pinout (Similar Part ~ Left VCC, Middle VOUT, Right GND)

Part 5: Assignment:

- Using the LTSpice simulations you made earlier in the lab, re-run the simulations using the same component values that were used to physically build the circuits.
    - Voltage Divider
        - 9 Volts, 330 Ohms, 1.5 kOhms, and 3.3 kOhms
    - Current Divider
        - 9 Volts, 330 Ohms, 1.5 kOhms, and 3.3 kOhms
    - Simple LED
        - 9 Volts, 330 Ohms, and LED
    - Adjustable LED
        - 9 Volts, 330 Ohms, LED, and vary the resistance value.
- Screenshot the plots you received from these new simulations and place them into a report (labeling each figure similar to how they are labeled in this lab document).
- Include two to three sentences explaining what you understand about each of the different circuits and how they work (simple explanations).
- Scan and place a picture of the tables you filled in during lab into your report (make sure that you have received signatures from Dr. Van Neste, JC, or Jacob).
- Submit the report to the Ilearn Dropbox by the due date. All submissions should be as .PDF files and should be submitted by the due date (late submissions will receive a zero).

Resistance: **Signature**: _____

Resistor (R1, R2, R3)	Measured Resistance	Expected Resistance	$Percent\ Error = \left\lvert \frac{M-E}{E} \right\rvert * 100$
R1 = 330		330 Ohms	
R2 = 1.5k		1.5 kOhms	
R3 = 3.3k		3.3 kOhms	
Potentiometer (Code)		10k Ohms	

What are your thoughts: _____

_____

Voltage Divider Circuit: **Signature**: _____

Voltage Drop	Measured	Expected	Current Through	Measured	Expected
R1 = 330		0.579 V	R1 = 330		1.754 mA
R2 = 1.5k		2.632 V	R2 = 1.5k		1.754 mA
R3 = 3.3k		5.79 V	R3 = 3.3k		1.754 mA

What are your thoughts: _____

_____

Current Divider Circuit: **Signature**: _____

Voltage Drop	Measured	Expected	Current Through	Measured	Expected
R1 = 330		9.00 V	R1 = 330		27.27 mA
R2 = 1.5k		9.00 V	R2 = 1.5k		6.00 mA
R3 = 3.3k		9.00 V	R3 = 3.3k		2.72 mA

What are your thoughts: _____

_____

Simple LED Circuit: **Signature**: _____

Voltage Drop	Measured	Expected	Current Through	Measured	Expected
R1 = 330		5.8 V ~ 7.0 V	R1 = 330		27.27 mA
LED		2.0 V ~ 3.2 V	LED		27.27 mA

What are your thoughts: _____

_____

_____

Adjustable LED Circuit: **Signature**: _____

Current Through LED	Measured Current
Potentiometer Turned All the Way Left	
Potentiometer Turned All the Way Right	

What are your thoughts: _____

_____

_____