ECE 1000 Explorations in ECE

Lab 3: Simulating DC Circuits with LTSpice

Voltage Divider, Current Divider, and LED (Adjustable) Circuits

April 6th, 2026

Dr. Charles Van Neste ~ cvanneste@tntech.edu

JC Williams ~ jcwilliams@tntech.edu

Introduction:

This lab session explores the process for simulating direct current (DC) circuits, focusing on voltage dividers, current dividers, and Light Emitting Diode (LED) circuits. The voltage divider circuit is a fundamental circuit in which the output voltage is a specific fraction of the input voltage, determined by the resistance within the circuit. In contrast, the current divider circuit, while maintaining a constant voltage across its resistors, illustrates how the total current is distributed throughout the circuit, where the output current is a fraction of the input current. Additionally, this lab showcases practical applications of these principles through LED circuits. In these circuits, the behavior of the LEDs is governed by adjusting the circuit's resistance which influences the current through the device. In this lab, students will engage in the construction, simulation, and analysis of these circuits. The aim of this lab is to provide students with an understanding of how to simulate real-world DC circuits.

Project Objectives:

The following are the objectives for the third ECE 1000 lab:

DURING LAB:

- Following part 1 of the handout, install and set up the LTSpice circuit simulation software (If you haven't already).
- Following part 2 of the handout, simulate the following circuits:
    - Voltage Divider
    - Current Divider
    - Simple LED Circuit
    - Adjustable LED Circuit
- Following part 3 of the handout, complete the after-lab assignment. An example of the lab report format has been posted along with this handout in the course GitHub.
- Remember, Dr. V, JC, and Jacob will be available throughout the lab for questions.
- Your lab report (individual effort and submission) will be due not later than Monday, April 13th at 11:59 PM (must be submitted as a PDF document and follow the report guidelines).

Part 1: LTSpice Software Installation and Setup:

Step 1 (Installing LTSpice and Creating Your First LTSpice Simulation File):

- Open your preferred browser and go to the following link:

  https://www.analog.com/en/design-center/design-tools-and-calculators/ltspice-simulator.html

- If using a Windows machine, click on "Download for Windows 10/11 64-bit".
- If using a Mac machine, click on "Download for MacOS".
- Run the downloaded file and step through all instructions (optional to include desktops shortcuts)
- Once the software has finished installing, create a new folder on your desktop.
  - Example: "ECE_1000_LTSpice_Simulations"
- Open the LTSpice software.
- From the LTSpice home screen, click **"File"** and then **"New Schematic".**
- Then, in the newly opened file titled "Draft1.asc", click "**File"** and then "**Save As"**, and then save the simulation file (with the new name you want) in the file previously created on your desktop.
    - Example File Path:

      C:\Users\19315\Desktop\ECE_1000_s26\LTSpice_Simulation_v1.asc
- Now you are ready to start simulating your electrical circuits in LTSpice!
- LTSpice is a circuit simulation software that allows you to examine many different circuit behaviors and parameters.
- EE's and CompE's often use LTSpice due to its simple learning curve and the availability of its users to design their own custom circuit components.
  - Not only are there circuit component libraries included with the base version of the software, **but** users can also design and operate their own custom circuit components.

Step 2 (The LTSpice Toolbar ~ Editing Your First Schematic):

- Once you have created a draft.asc file in LTSpice and saved it with your specific file name, the following tool bar will appear, allowing you to begin designing your circuit schematic.

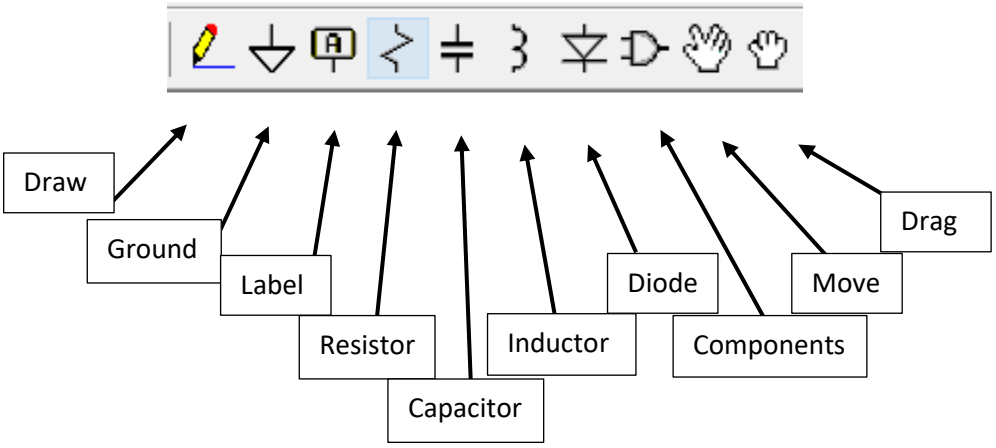

- Draw: This tool is what you used to draw the wires to connect the circuit components.
- Ground: This is the reference point for the circuit analysis and must be included on each schematic.
- Label: This tool allows you to label different nodes of a circuit.
- Resistor: This is the button to insert a resistor.
- Capacitor: This is the button to insert a capacitor.
- Inductor: This is the button to insert an inductor
- Diode: This is the button to insert a diode.
- Components: This is the button to open the available components in LTSpice for your schematic
- Move: This allows you to select components and move them or change their orientation.
- Drag: This allows you to drag components while they are still connected to the rest of the circuit.
- Cut: This is the scissor icon to the left of the other tools pictured above, allowing you to delete.
- For mac users the wire, component, and label tools can be found when you right click with two fingers on the touch pad then select draft. The delete and move tools can be found under the edit tab. Press “g” while on the schematic page to place a ground on the circuit.

Part 2: Learning LTSpice Circuit Simulations:

Step 1 (Simulating a Voltage Divider Circuit):

- For our first simulation, we want to simulate the simple voltage divider circuit.
- The voltage divider circuit will have a 5 V voltage source and three resistors connected *in series* with the following values: 510 Ohms, 1.2 kOhms, and 2 kOhms. (k ~ 1000 Ohms).
- First, to insert the voltage source, click on the components button and scroll until you find the word *voltage*, or search *voltage* in the search menu.
- Next, insert the resistors by either clicking on the resistor button or by holding down the key *ctrl* and pressing *R* on the keyboard.
- To add component values to the resistors, right click with your mouse on the component and type the number that you desire ("510" for 510 Ohms, "1.2k" for 1.2 kOhms, and "2k" for 2 kOhms).
    - NOTE for MacOS: Two-finger click on the component to open the box to enter values.
- If you need to move the components, you can click on the *move* button and rearrange the parts.
- To connect the components, click the *draw* button and draw the appropriate lines connecting the terminals of the components.
- Finally, using the *ground* button, place a ground symbol on the line between the last resistor and the negative terminal of the voltage source (again reference the circuits in part 1 if needed).
- To **simulate** the circuit, click on the *run* icon (looks like a person running). In the menu that opened, the tab selected should be titled *transient analysis*, which is the default option. Enter "1" for the stop time and "0" for the start time, starting the simulation, then stopping after 1 second.
- For MacOS users, click the touchpad with two fingers, then choose *draft*, and select *spice directive*. Then hit the *run* icon and follow the above prompts to produce the same results.
- For this circuit, we want to measure the voltage drop across each resistor.
- Figure 1 shows an example schematic of the voltage divider circuit.

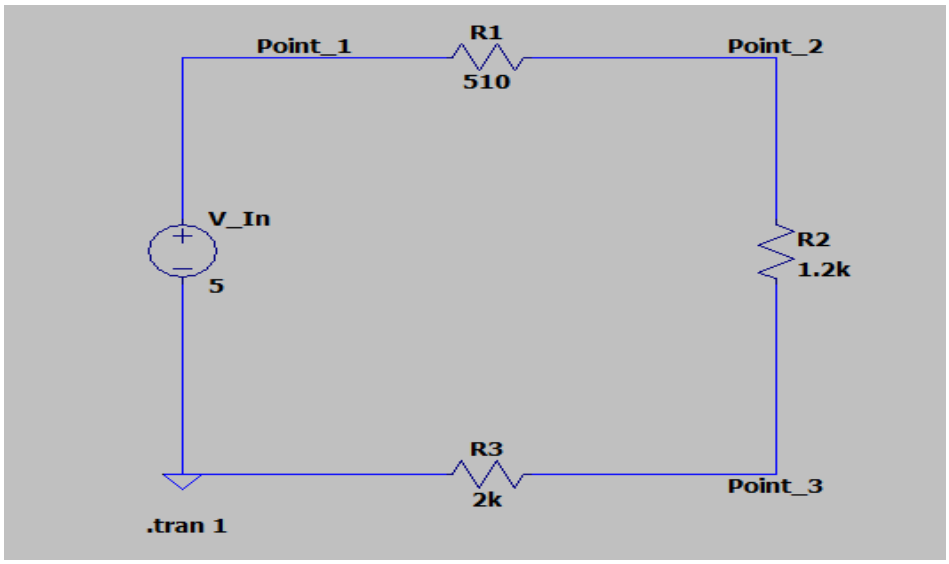

Fig. 1. LTSpice Voltage Divider Circuit with Values

- After entering the values and pressing "*OK*", a plot window will appear. The *X* axis will be the time (in seconds) and the *Y* axis will be whatever it is that is being measured.
- To measure the voltage drop across a resistor, left click and hold while you drag from the left side of the resistor to the right side of the resistor (the red probe will appear and then drag across the resistor until the probe turns black).
- Repeat this for the other resistors and then take a screenshot of the plot (Windows users can use "snipping tool"). The plot you produce should be like Figure 2.

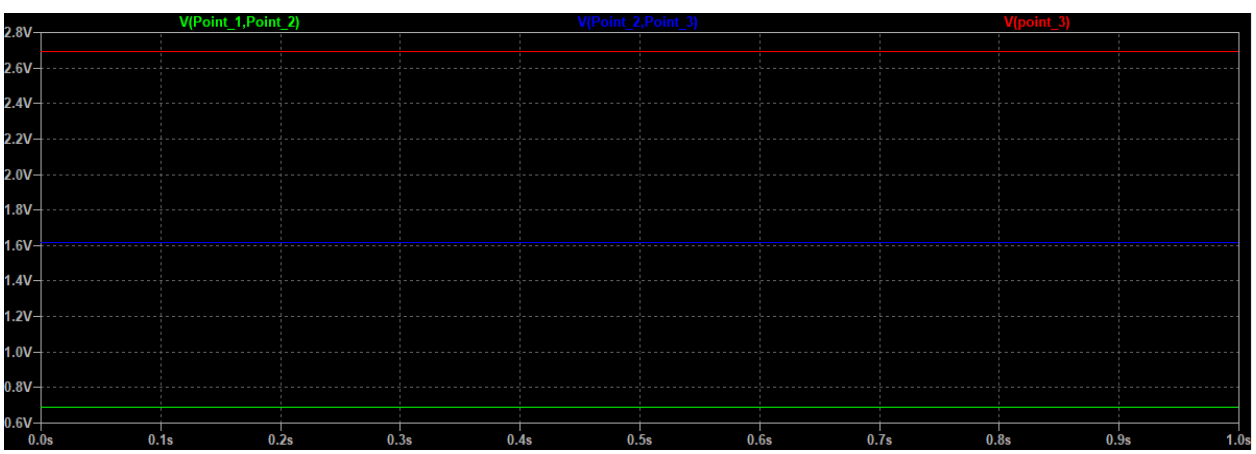

Fig. 2. LTSpice Voltage Drop Across Resistors

Step 2 (Simulating a Current Divider Circuit):

- For our next simulation, we want to simulate the simple current divider circuit.
- The current divider circuit, like the voltage divider circuit, will have a 5 V voltage source and three resistors connected *in parallel* with the same values as before.
- Following the same process as with the voltage divider circuit, implement the components and create your current divider schematic.
- Follow the same simulation setup as earlier, creating a *transient analysis* simulation.
- Figure 3 shows an example schematic of the current divider circuit.

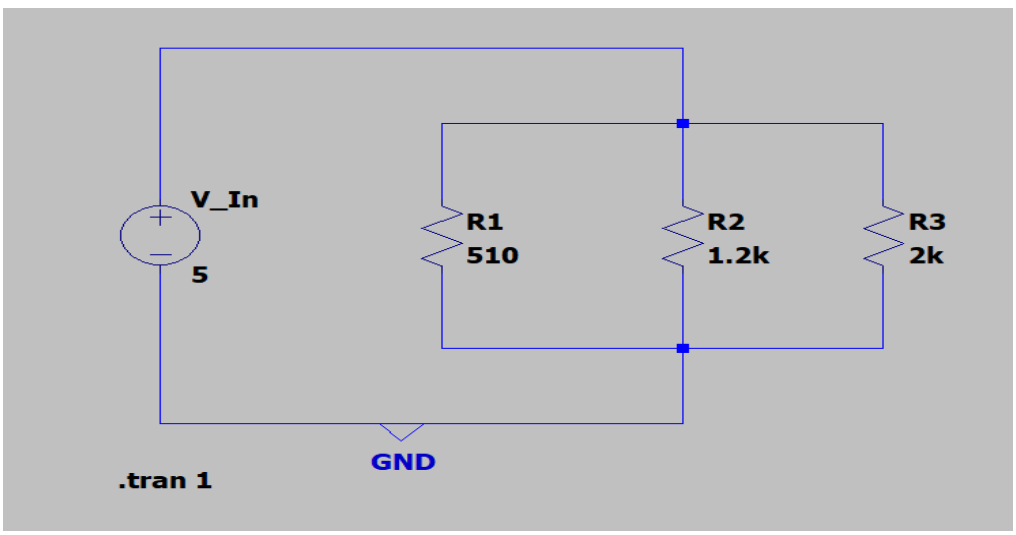

Fig. 3. LTSpice Current Divider Circuit with Values

- To measure the current through each resistor, hover your cursor over what you are measuring and you will see the tool below appear over the resistor, left click, and the current will be measured.

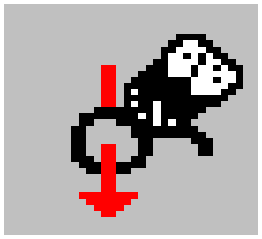

Fig. 4. LTSpice Current Probe Tool

- Repeat this for the other resistors and then take a screenshot of the plot (again using "snipping tool" or some other software). The plot you produce should be like Figure 5.
- Also, create another simulation plot measuring the voltage drop across the resistors. Since the resistors are arranged in *parallel*, the voltage drop should be equal across all the resistors.

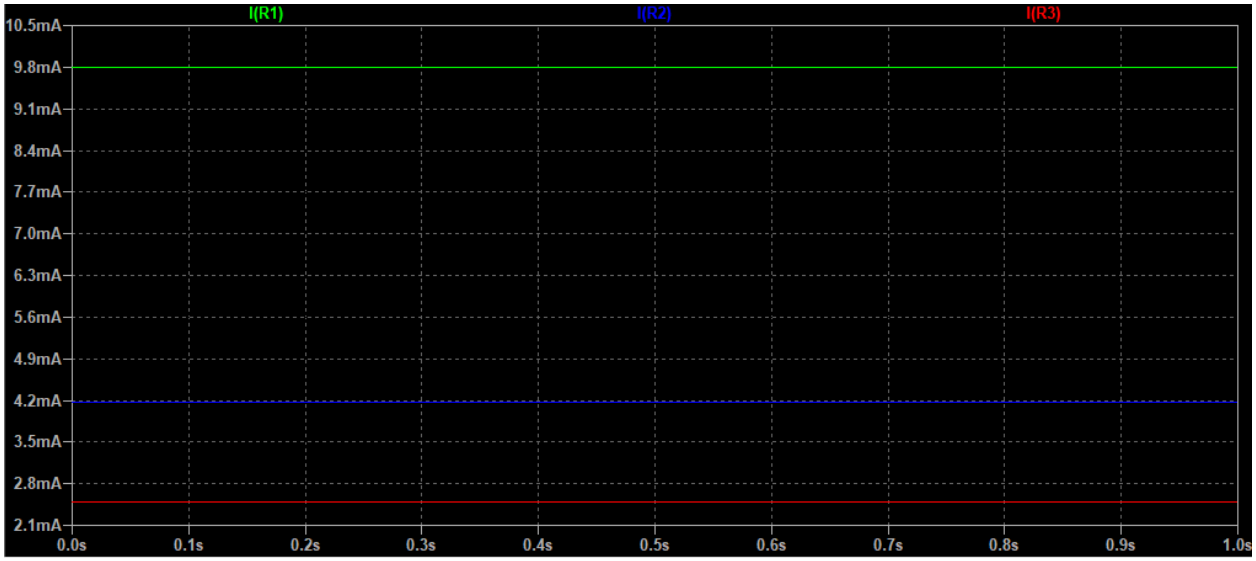

Fig. 5. LTSpice Current Through Resistors

Step 3 (Simulating a Simple and Adjustable LED Circuit):

- For our final simulation, we want to simulate a simple and adjustable LED circuit.
- The simple led circuit will have a 5 V voltage source, a 510 ohm resistor, and a "LED" (you can find this in the component menu by typing LED).
- Following the same process as the other circuits, implement the components and create your LED circuit.
- Follow the same simulation setup as earlier, creating a *transient analysis* simulation.
- Figure 6 shows an example schematic of the simple LED circuit.

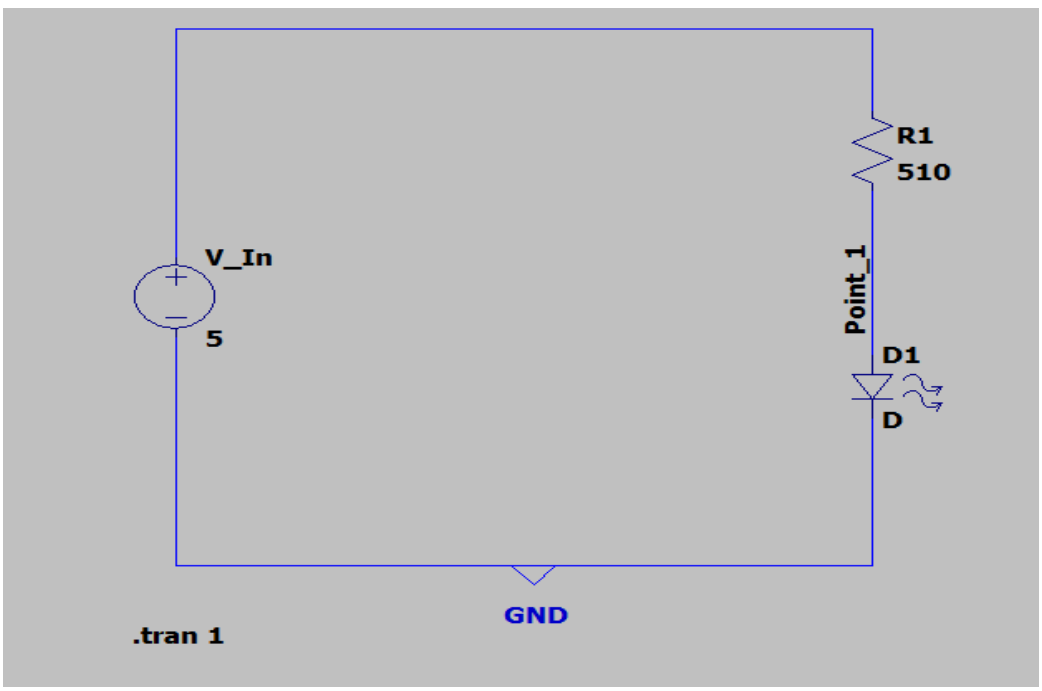

Fig. 6. LTSpice LED Circuit with Values

- First, measure the voltage at point 1, which is shown in Figure 6. This is the forward voltage of the LED, or the voltage at which the LED will "turn on".
- Next, measure the current through the LED, also known as the limited current from R1. You can measure both things at once, having a plot with one y-axis reading voltage and the other y-axis reading current. The plot you produce should be like Figure 7. Screenshot your plots.

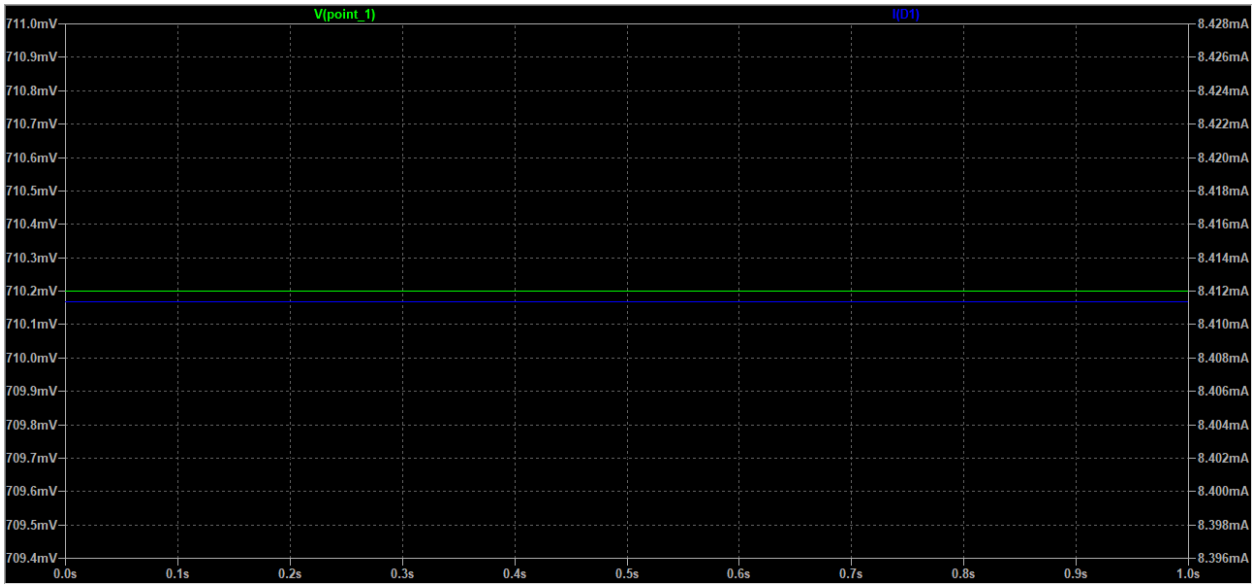

Fig. 7. LTSpice Voltage and Current Through LED

- Now, change the resistor value of R1 from 510 ohms to 220 Ohms and rerun your simulation. Capture images of your new plots, how does changing the resistance in the circuit affect the current flowing through the LED?

Part 3: Assignment:

- Using the LTSpice simulations you made earlier in this lab, re-run the simulations using the same component values that were used to physically build the DC circuits in Lab 2 (switch the values).
    - Voltage Divider
        - 9 Volts, 330 Ohms, 1.5 kOhms, and 3.3 kOhms
    - Current Divider
        - 9 Volts, 330 Ohms, 1.5 kOhms, and 3.3 kOhms
    - Simple LED
        - 9 Volts, 330 Ohms, and LED
    - Adjustable LED
        - 9 Volts, 330 Ohms, LED, vary the resistance value (try at least 220 Ω and 510 Ω, as done in Part 2).
- Screenshot the plots you received from these new simulations and place them into a report (making sure to follow the format of the example report posted on the GitHub).
- For each circuit, create a table and place it into your report listing the voltage across each resistor as well as the current through each resistor.
- Include a statement explaining the behavior of these circuits (along with the operating equations).
- All submissions must be completed as .PDF files (files submitted as .DOCX or similar format will not be graded) and should be submitted by the due date (late submissions will receive a zero). To receive full marks, your report must follow the format of the example report posted on the GitHub.