Experiment 6: Half-Wave Rectifier

Course: ECE 3050

Section and Semester: 103 Spring ’25

Author: Jacob McMurray

Lab Partners: John Bryson, Jacob Blackburn

Date of Experiment: 3/26/26

Date Submitted: 4/3/26

Introduction

This experiment investigates diode behavior in a half-wave rectifier and its use in a basic linear power supply. The lab focuses on converting a sinusoidal AC input into a unidirectional output with a DC component, then observing how adding a filter capacitor improves output smoothness by reducing ripple. The learning objective is to understand the operation of a diode in rectification and gain experience measuring key electrical parameters of power-supply circuits. The experimental objective is to verify that theoretical analysis and computer simulation accurately predict circuit operation for both the simple rectifier and the capacitor-filtered power supply [1].

Background/Theory/Design

Rectification uses a diode to pass one polarity of an AC waveform and block the other, creating a unidirectional output [1], [3]. For the sinusoidal input,

$$v(t) = V_m \sin(\omega t),$$

where V_m is the peak amplitude and $\omega = 2\pi f$. In the half-wave rectifier, the diode conducts during the positive half-cycle and is off during the negative half-cycle, so the output contains a DC component plus AC harmonics [1], [2].

The DC component is the average value over one period:

$$V_{DC} = \frac{1}{T}\int_0^T v_o(t)\,dt = \frac{1}{2\pi}\int_0^{2\pi} v_o(\omega t)\,d(\omega t).$$

When the diode is on, the output is approximately reduced by the diode drop V_γ (about 0.7 V for the diode used), and when the diode is off, output is near zero for the simple half-wave case.

To improve the DC output, a capacitor is connected across the load. During conduction intervals, the capacitor charges close to $(V_m - V_\gamma)$; when the diode turns off, it discharges through R_L, causing an exponential decay between peaks. This behavior creates a ripple voltage superimposed on the DC level. Increasing capacitance generally reduces ripple and produces a smoother output, but larger capacitance also increases peak diode current and may approach device limits. Therefore, the design tradeoff in this experiment is ripple reduction versus diode stress and practical component constraints [1], [3].

Compared with the unfiltered half-wave rectifier (Fig. 1 and Fig. 2), the filtered half-wave rectifier

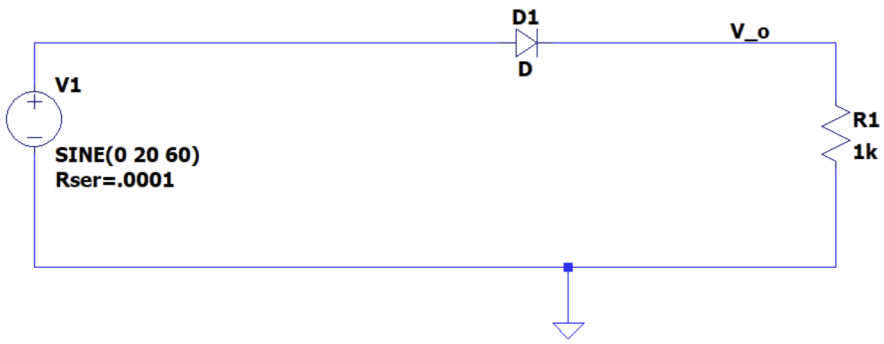

Figure 1: Unfiltered half-wave rectifier circuit diagram.

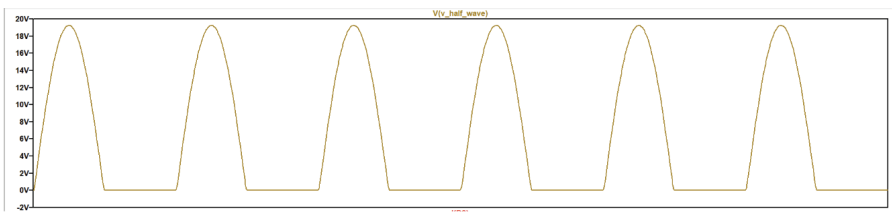

Figure 2: Unfiltered half-wave rectifier output waveform graph.

adds a capacitor across the load. In the unfiltered case, the output follows only the positive half-cycles of the source and drops to approximately zero during the negative half-cycles, giving a large ripple component and stronger low-frequency harmonics. In the filtered case, the capacitor charges near the peak value $(V_m - V_\gamma)$ when the diode conducts, then discharges through R_L between peaks; this reduces ripple and increases the average (DC) output level. The lab handout notes that larger capacitance gives smoother output, but it also increases diode peak current, so the capacitor value must be chosen as a tradeoff between ripple reduction and component stress [1].

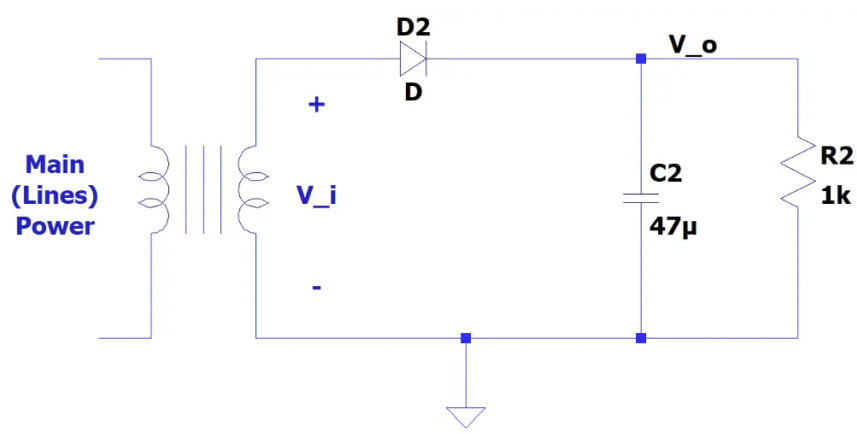

Figure 3: Filtered half-wave rectifier circuit diagram.

The lab uses a wall-transformer input at line frequency, a 1N4001 diode, a filter capacitor, and

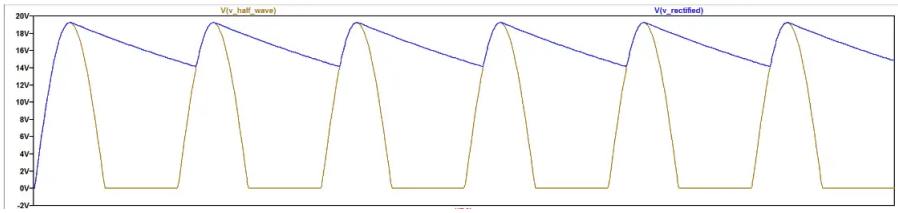

Figure 4: Filtered half-wave rectifier output waveform graph.

variable load resistance to compare waveform shape, average output, ripple magnitude, and diode current across operating conditions.

Procedure

The experiment used a 1N4001 diode, a 47 μF capacitor, and a nominal load resistance of 1 kΩ. A wall-adapter transformer was used as the AC source. Before energizing the circuit, diode and capacitor polarities were checked carefully. Because the capacitor is electrolytic, correct polarity and adequate voltage rating were verified to avoid component damage.

Measurement methods followed the lab guidance for non-sinusoidal waveforms. A digital multimeter (DMM) was used to measure DC (average) voltages. An oscilloscope was used to measure AC quantities (peak or peak-to-peak), as well as waveform minima and maxima. Oscilloscope channels were DC-coupled so both DC and AC components of each waveform were visible.

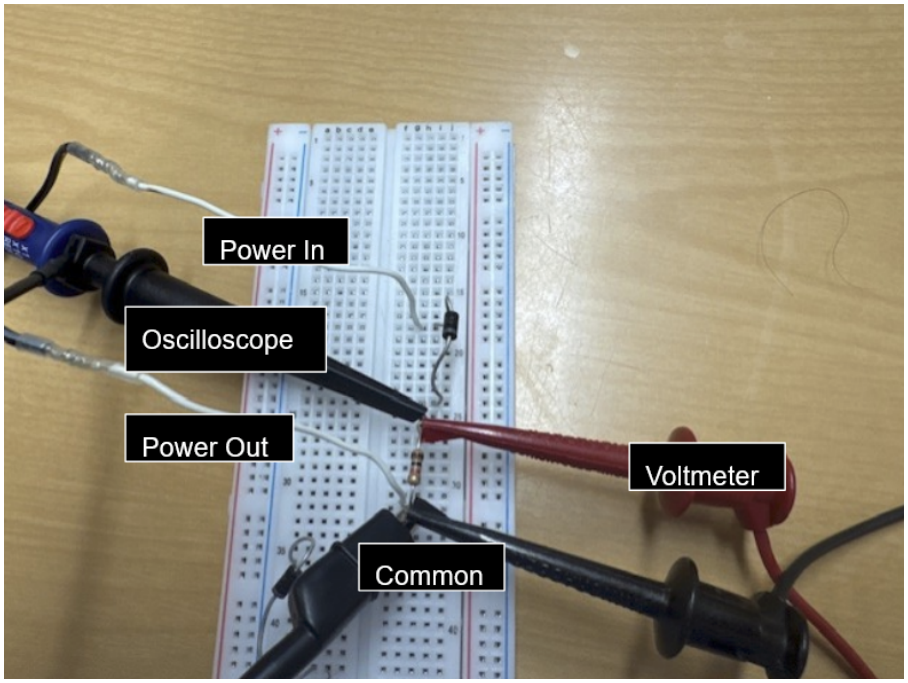

Figure 5: Physical unfiltered circuit for data acquisition.

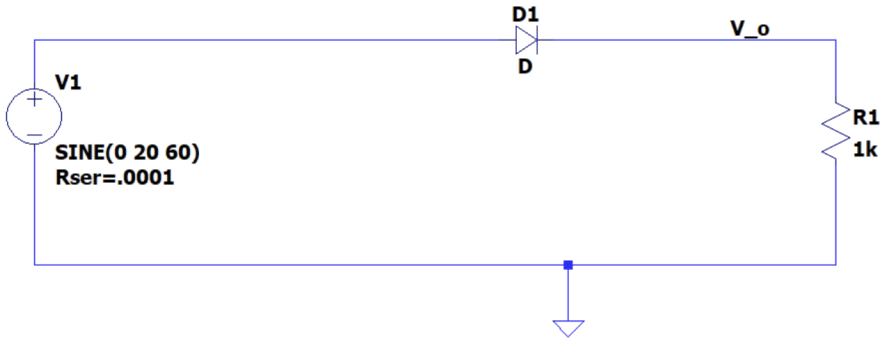

Figure 6: Unfiltered half-wave rectifier circuit diagram.

Figure 7: Resultant waveform measured on oscilloscope of unfiltered rectifier.

First, the unfiltered half-wave rectifier circuit shown in Fig. 5 was built on the bench. The transformer labeled RMS output voltage was recorded, and the actual RMS source voltage was measured with the DMM. The load-voltage waveform was observed and plotted with the oscilloscope with the resulting waveform shown in Fig. 7 with the peak mesurment shown in Fig. 9. The DC component of load voltage was mesured in by the DMM going across the diode as shown in Fig. 5,and the DC load current was then determined by breaking the circuit and inserting the DMM in series.

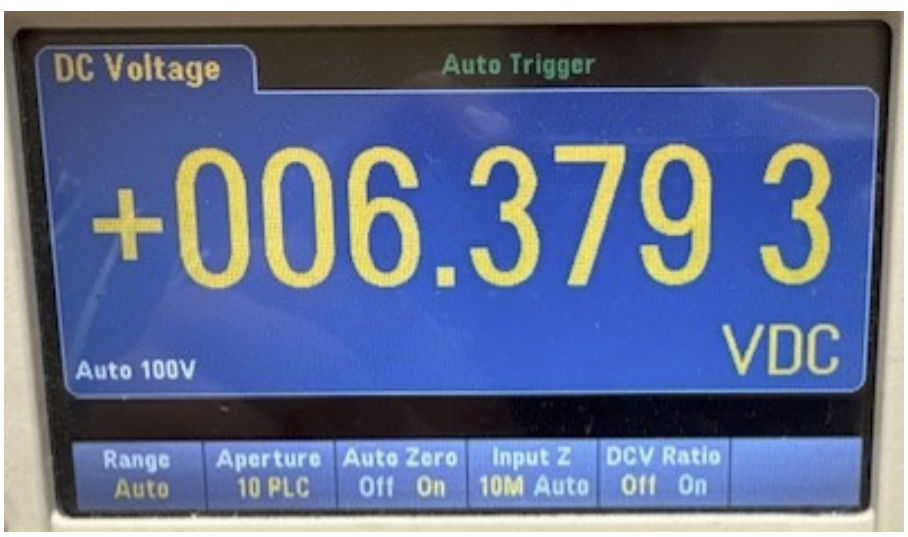

Figure 8: DC component of unfiltered circuit measured by DMM.

Figure 9: AC peak of unfiltered circuit measured by oscilloscope.

Next, the filtered half-wave rectifier circuit was built by adding the capacitor across the load (Fig. 11). Input voltage and load voltage waveforms were observed and plotted as shown in Fig. 12. The DC and AC components of load voltage were measured again as well as the ripple voltage as shown by Fig. 13. Diode-current waveform was observed by measuring the volatge across the shunt resitor and then divideing by that resistance to avoid shorting the diode as shown in Fig. 14, and the diode peak current was measured.

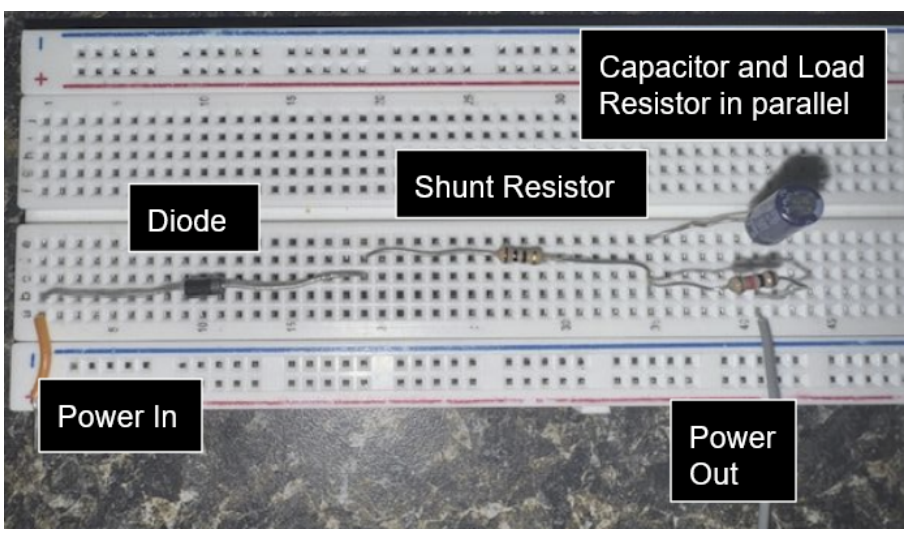

Figure 10: Physical filtered half wave rectifier circuit for which data was obtained.

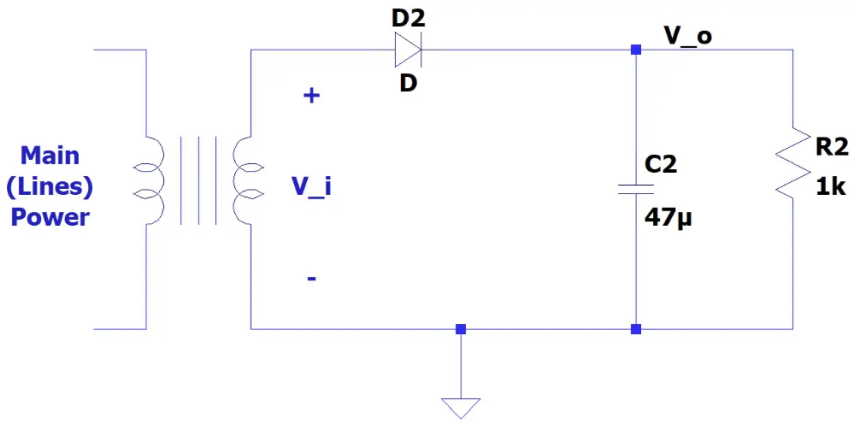

Figure 11: Filtered half-wave rectifier circuit diagram.

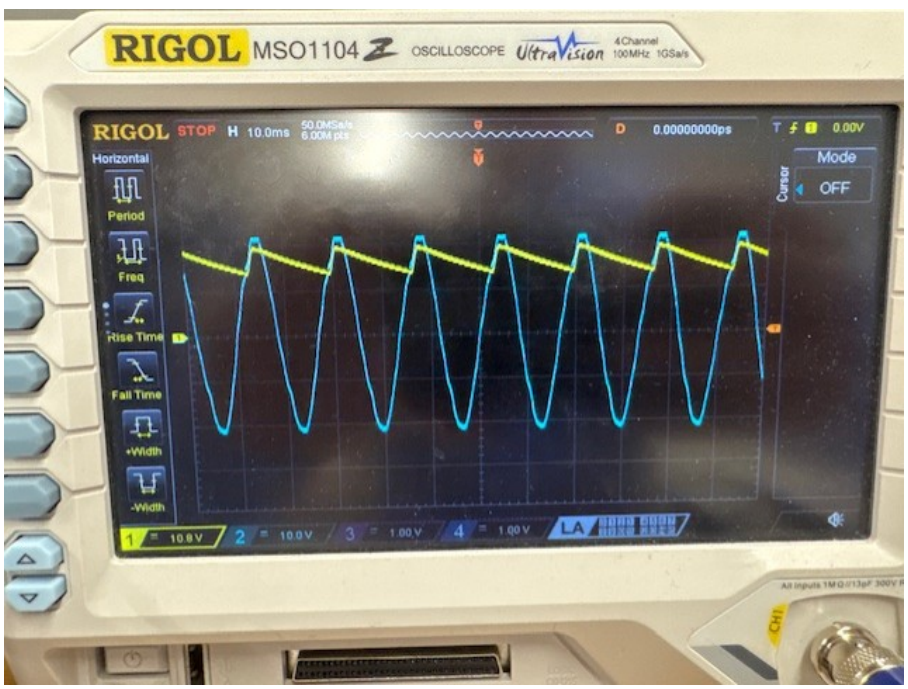

Figure 12: Resulting waveform from the filtered half wave rectifier measured by oscilloscope.

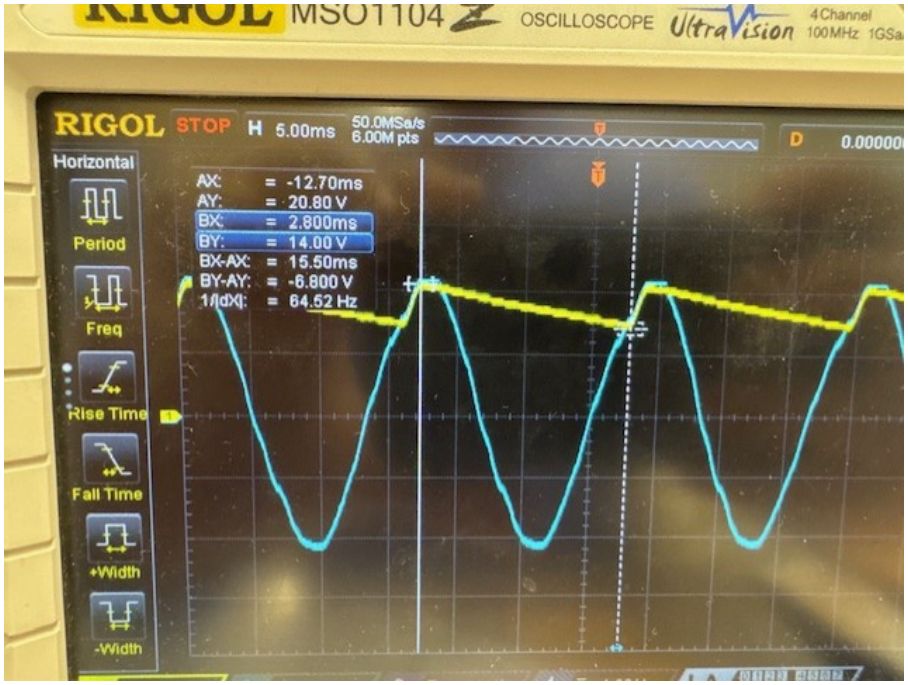

Figure 13: Voltage ripple of filtered circuit measured by the oscilloscope.

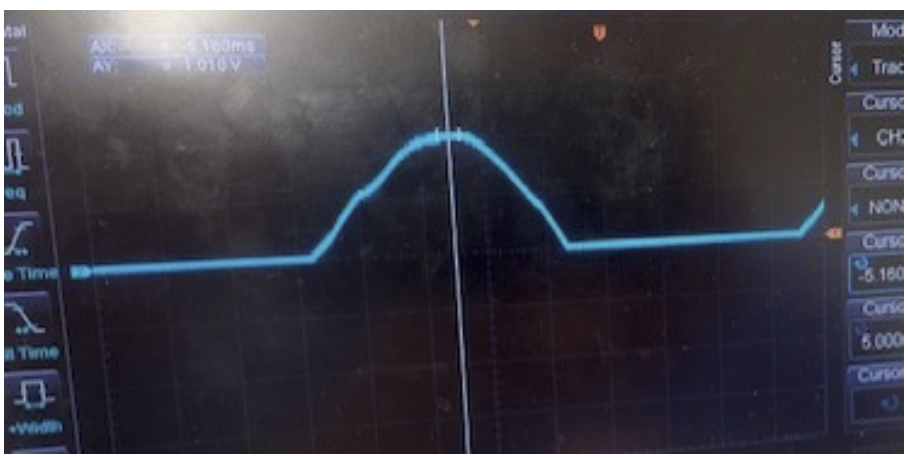

Figure 14: Current wave form across 10 Ω resistor. Scale 1V = 100mA.

To evaluate load dependence, the filtered-rectifier measurements were repeated for two additional load cases. The load was changed to 4.7 kΩ, and the measurements were repeated. Then the load was changed to 195 Ω (implemented with two 390 Ω resistors in parallel), and the same measurements were repeated.

Results, Analysis, and Discussion

Set Up Parameters

Parameter	Value
Rated transformer voltage	12 V
Measured RMS voltage V_{rms}	15.0 V
Calculated peak voltage V_m	21.21 V

Part 1: Unfiltered Half-Wave Rectifier

Quantity (Unfiltered Circuit)	Calculated	Measured	Percent Error (%)
Peak source voltage, V_m	19.80V	20.72 V	+4.65%
Average output voltage, V_{DC}	6.08 V	6.377 V	+4.89%
Minimum output voltage, V_{min}	0.00 V	0 V	+0.00%
AC component of output voltage, V_{AC}	19.80 V	20.72 V	+4.65%
Average load current, $I_{L,avg}$	6.08 mA	6.44 mA	+5.93%

Part 2: Filtered Half-Wave Rectifier ($R_L = 1\,\text{k}\Omega$)

Quantity (Filtered, $R_L = 1\,\text{k}\Omega$)	Calculated	Measured	Percent Error (%)
Maximum output voltage, V_{max}	20.51 V	20.80 V	+1.41%
Average output voltage, V_{DC}	17.42 V	17.580 V	+0.91%
Minimum output voltage, V_{min}	14.33 V	14.06 V	-1.90%
Ripple/AC component, V_R	6.18 V	6.80 V	+10.07%
Average load current, $I_{L,avg}$	17.42 mA	14.58 mA	-16.31%
Peak diode current, I_{DP}	352.02 mA	182.3 mA	-48.21%

Part 3: Filtered Half-Wave Rectifier ($R_L = 4.7\,\text{k}\Omega$)

Quantity (Filtered, $R_L = 4.7\,\text{k}\Omega$)	**Calculated**	**Measured**	**Percent Error (%)**
Maximum output voltage, V_{max}	20.51 V	20.80 V	+1.41%
Average output voltage, V_{DC}	19.76 V	19.80 V	+0.18%
Minimum output voltage, V_{min}	19.02 V	19.60 V	+3.06%
Ripple/AC component, V_R	1.49 V	1.20 V	-19.53%
Average load current, $I_{L,avg}$	4.21 mA	4.23 mA	+0.59%
Peak diode current, I_{DP}	150.29 mA	56.02 mA	-62.72%

Part 4: Filtered Half-Wave Rectifier ($R_L = 195\,\Omega$)

Quantity (Filtered, $R_L = 195\,\Omega$)	**Calculated**	**Measured**	**Percent Error (%)**
Maximum output voltage, V_{max}	20.51 V	20.201 V	-1.51%
Average output voltage, V_{DC}	10.74 V	11.846 V	+10.27%
Minimum output voltage, V_{min}	0.98 V	4.200 V	+330.85%
Ripple/AC component, V_R	19.54 V	16.002 V	-18.09%
Average load current, $I_{L,avg}$	55.09 mA	60.75 mA	+10.28%
Peak diode current, I_{DP}	978.84 mA	101.03 mA	-89.68%

Summary and Conclusion

This lab had signifigant error when compared to calculatation which resulted from the DC source being a greater magnitude than the source waveform the diode remains in forward bias. Another factor is the calculation was using an ideal diode model that veries greatly from the characteristics of the one used in this lab. The analysis of this error and the reasoning behind it helped fufill the learning objective of this lab to support or understanding of the operation and circuit calculation for diodes. The experimental objective of the lab is to verify the operation of the diodes are predictable using simulation and calculation, which is proven through the LTSpice simulations and the calculations made in the presented tables. With the adjustment and understanding of the limited mathmatical model the numerical deviations can be explained.

References

[1] ECE 3050 Circuits and Electronics Lab, *Experiment 6: Half-Wave Rectifier*, Tennessee Technological University, Cookeville, TN, USA, 2026.

[2] C. Johnson, ”Second Order Natural Circuit Response,” class lecture in ECE 3050, Dept. of Electrical and Computer Engineering, Tennessee Technological University, Cookeville, TN, Jan. 20, 2026.

[3] D. A. Neamen, *Microelectronics: Circuit Analysis and Design*, 4th ed. New York, NY, USA: McGraw-Hill, 2010.

Appendix

Materials and Equipment List

The following materials and equipment were used.

- Rectifier diode 1N4001
- 47 μF electrolytic capacitor
- 1 kΩ resistor
- 4.7 kΩ resistor
- 195 Ω (two 390 Ω in parallel) resistor
- Wall-adapter transformer (”wall wart”)
- Digital multimeter
- Oscilloscope
- Soulderless Breadboard and leads/probes

Additional Formulas

- Diode equation form used in analysis:

$$v_D \approx nV_T \ln\left(\frac{i_D}{I_S}\right)$$

- Average DC output for filtered half-wave rectifier:

$$V_{DC} = (V_m - V_\gamma) - \frac{V_R}{2}$$

- Average load current relation:

$$I_{L,av} = \frac{V_{DC}}{R_L}$$

- Peak diode current estimate:

$$I_{DP} = \frac{(V_m - V_\gamma - V_R)}{R_L} + \frac{2\pi(V_m - V_\gamma)}{R_L}\sqrt{\frac{2V_m}{V_R}}$$

Prelab-