Lecture 5

Exp

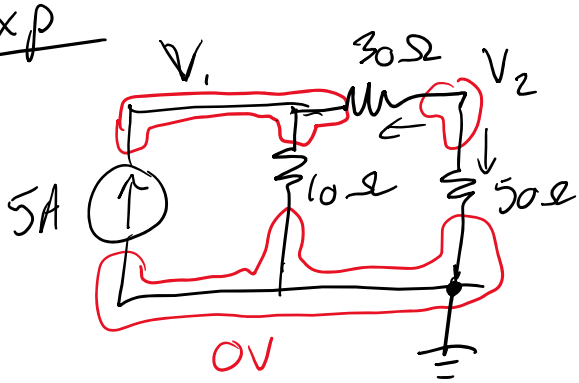

* find voltages at all nodes

Node 1

$$-5A + \frac{V_1 - 0}{10\Omega} + \frac{V_1 - V_2}{30} = 0$$

Node 2

$$\frac{V_2 - V_1}{30} + \frac{V_2 - 0}{50} = 0$$

Clean the equations. (Group

$$-5A + \frac{V_1 - 0}{10\Omega} + \frac{V_1 - V_2}{30} = 0$$

$$\frac{V_1}{10} \rightarrow \left(\frac{1}{10}\right)V_1$$

$$-5A + \left(\frac{1}{10}\right)V_1 + \left(\frac{1}{30}\right)V_1 - \left(\frac{1}{30}\right)V_2 = 0$$

$$\left(\frac{1}{10} + \frac{1}{30}\right)V_1 - \frac{1}{30}V_2 = 5A$$

$$(0.133)V_1 - (0.033)V_2 = 5A$$

$$(0.133)V_1 - (0.033)V_2 = 5A \rightarrow \text{Cleaned}$$

Node 2

$$\frac{V_2 - V_1}{30} + \frac{V_2 - 0}{50} = 0$$

$$-\left(\frac{1}{30}\right)V_1 + \left(\frac{1}{30} + \frac{1}{50}\right)V_2 = 0$$

$$(-0.033)V_1 + (0.0533)V_2 = 0 \rightarrow \text{clean}$$

$$(0.133)V_1 - (0.033)V_2 = 5A \rightarrow (0.133)V_1 = 5A + 0.033V_2$$

solve for V_1

$$V_1 = 37.59 + 0.248V_2$$

$$(-0.033)V_1 + (0.0533)V_2 = 0$$

plug V_1 into 2nd equ.

$$(-0.033)(37.59 + 0.248V_2) + (0.0533)V_2 = 0$$

$$-1.24 - (0.0072)V_2 + (0.0533)V_2 = 0$$

$$(-0.0072 + 0.0533)V_2 = 1.24$$

$$(0.0461)V_2 = 1.24$$

$$V_2 = \frac{1.24}{0.0461}$$

$$\boxed{V_2 = 26.9\,V}$$

$V_2 = 26.9\,V$

$V_1 = 37.59 + 0.248 V_2$

$$V_1 = 37.59 + (0.248)(26.9V)$$

$$\boxed{V_1 = 44.26}$$

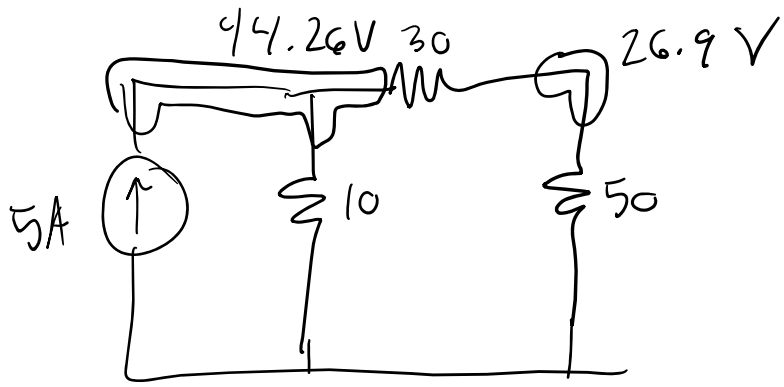

Exp 2

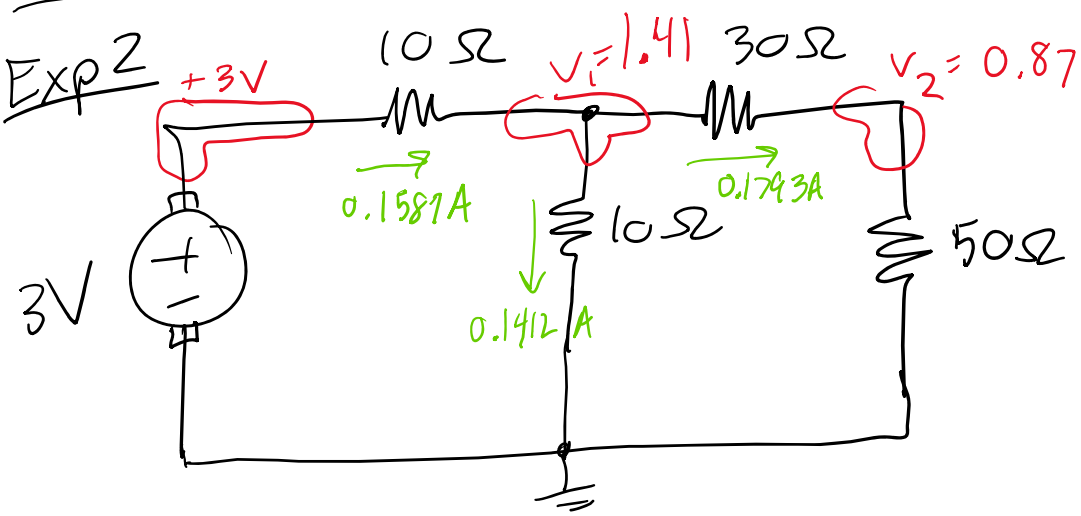

Node 1

$$\frac{V_1 - 3}{10} + \frac{V_1}{10} + \frac{V_1 - V_2}{30} = 0 \rightarrow \left(\frac{1}{10} + \frac{1}{10} + \frac{1}{30}\right)V_1 - \frac{V_2}{30} = \frac{3}{10}$$

$$(0.233)V_1 - (0.033)V_2 = 3/10$$

Node 2

$$\frac{V_2 - V_1}{30} + \frac{V_2}{50} = 0 \rightarrow -\frac{1}{30}V_1 + \left(\frac{1}{30} + \frac{1}{50}\right)V_2 = 0 \rightarrow (-0.033)V_1 + (0.0533)V_2 = 0$$

Node 1

$$(0.233)V_1 - (0.033)V_2 = 3/10$$

Node 2

$$(-0.033)V_1 + (0.0533)V_2 = 0$$

Take Eq 1 → solve for V_1

$$(0.233)V_1 = \frac{3}{10} + (0.033)V_2$$

$$V_1 = \frac{0.3}{(0.233)} + \frac{0.033}{0.233}V_2$$

$$V_1 = 1.288 + 0.142V_2$$

Plug V_1 into Eq. 2

$$(-0.033)(1.288 + 0.142V_2) + (0.0533)V_2 = 0$$

$$(-0.0425) - 0.004686V_2 + 0.0533V_2 = 0$$

$$(-0.004686 + 0.0533)V_2 = 0.0425$$

$$0.0486V_2 = 0.0425$$

$$\boxed{V_2 = 0.874V}$$

Plug V_2 into → $V_1 = 1.288 + 0.142V_2$

$$V_1 = 1.288 + 0.142(0.874)$$

$$\boxed{V_1 = 1.412V}$$