Input output connectors

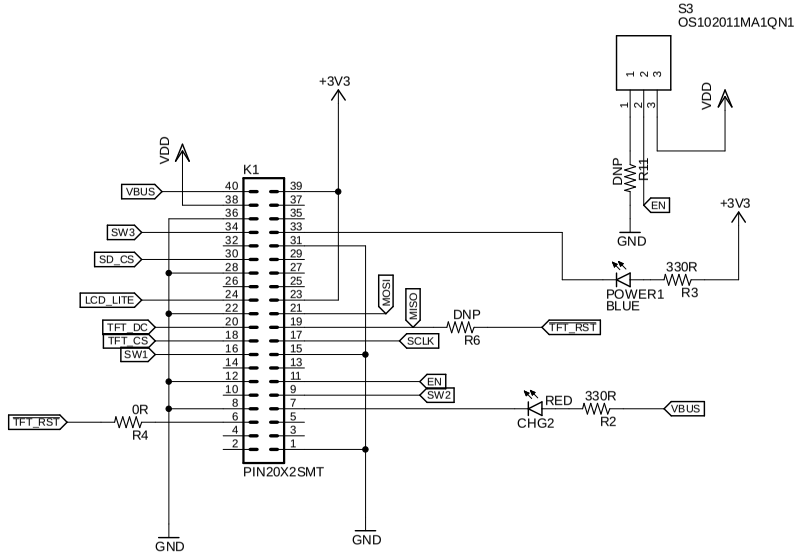

Display

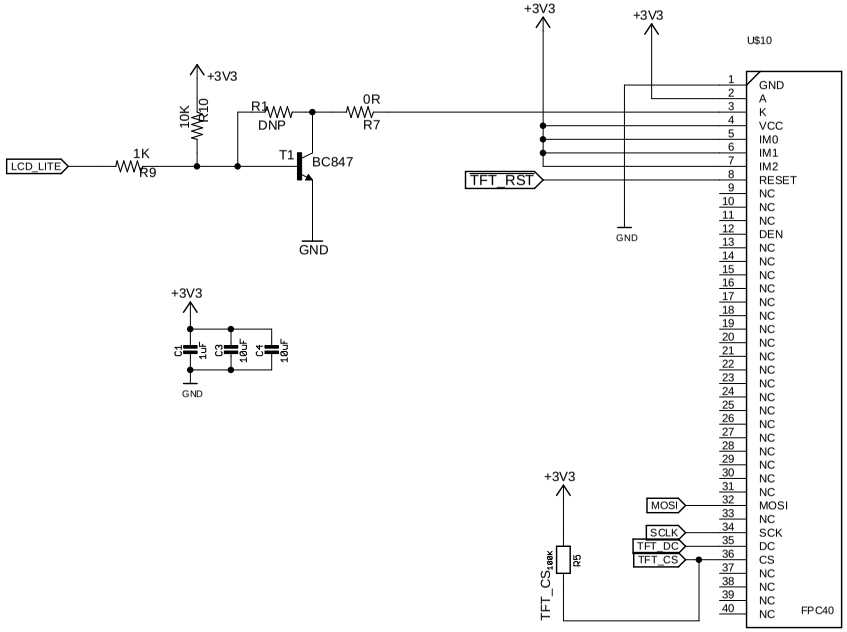

SD Card

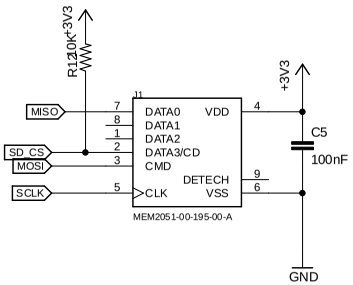

Navigation switch

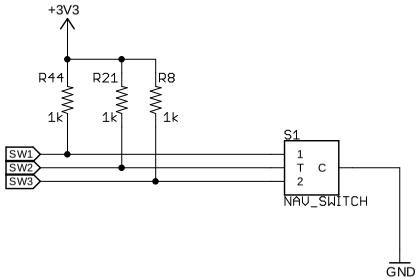

Display Controller ST7796 40pin

(Device Marking HD35019C40T)

open hardware

OSHW

PROTOCENTRAL

v3.1	
pc_healthypi_5.2_display_st7796	
25-04-2023 16:48	
Sheet: 1/1	