MT7628

PROGRAMMING GUIDE

Version: 1.0
Release date: 2014-06-03

MEDIATEK CONFIDENTIAL
FOR farrwang@symc.com.tw USE ONLY

© 2014 MediaTek Inc.
This document contains information that is proprietary to MediaTek Inc.
Unauthorized reproduction or disclosure of this information in whole or in part is strictly prohibited.
Specifications are subject to change without notice.

MT7628 Overview

The MT7628 SoC includes a high performance 580/575 MHz MIPS24KEc CPU core and high speed USB2.0/PCIe interfaces, which is designed to enable a multitude of high performance, cost-effective IEEE 802.11n applications with a MediaTek WiFi client card.

Functional Block Diagram

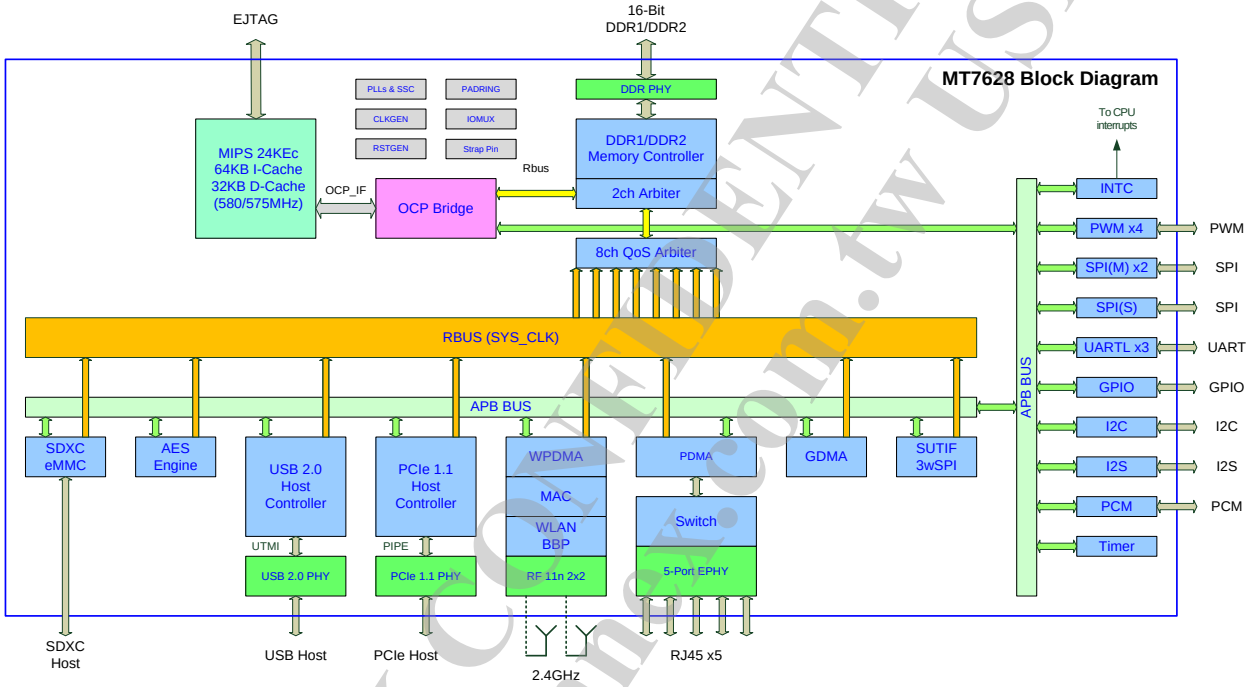

Figure 1-1 MT7628 Block Diagram

There are several masters (MIPS 24KEc, USB, PCI Express, SDXC, FE) in the MT7628 SoC on a high performance, low latency Rbus. In addition, the MT7628 SoC supports lower speed peripherals such as UART Lite, GPIO, I2C and SPI via a low speed peripheral bus (Pbus). The DDR/DDR2 controller is the only bus slave on the Rbus. It includes an Advanced Memory Scheduler to arbitrate the requests from bus masters, enhancing the performance of memory access intensive tasks.

MEDIATEK CONFIDENTIAL
FOR farrwang@symnex.com.tw USE ONLY

This document contains information that is proprietary to MediaTek Inc.
Unauthorized reproduction or disclosure of this information in whole or in part is strictly prohibited.

Document Revision History

Revision	Date	Author	Description
1.0	2014-04-28	PeterCT Wu	Initial Draft

MEDIATEK CONFIDENTIAL
FOR farrwang@ synnex.com.tw USE ONLY

This document contains information that is proprietary to MediaTek Inc.
Unauthorized reproduction or disclosure of this information in whole or in part is strictly prohibited.

Table of Contents

MT7628 OVERVIEW 2
FUNCTIONAL BLOCK DIAGRAM 2
DOCUMENT REVISION HISTORY 3
TABLE OF CONTENTS 4
TABLE OF FIGURES 6
LIST OF TABLES 7
1. MIPS 24KEC PROCESSOR 8
1.1 FEATURES 8
1.2 BLOCK DIAGRAM 9
1.3 MEMORY MAP SUMMARY 10
1.3 INTERUPT TABLE SUMMARY 11
1.4 CLOCK PLAN 12
2. REGISTERS 13
2.1 NOMENCLATURE 13
2.2 SYSTEM CONTROL 14
2.2.1 FEATURES 14
2.2.2 BLOCK DIAGRAM 14
2.2.3 REGISTERS 15
2.3 TIMER 32
2.3.1 FEATURES 32
2.3.2 BLOCK DIAGRAM 32
2.3.3 REGISTERS 33
2.4 INTERRUPT CONTROLLER 38
2.4.1 REGISTERS 38
2.5 EMC CONTROLLER 46
2.5.1 REGSITER 46
2.6 R-BUS CONTROLLER 63
2.6.1 FEATURES 63
2.6.2 BLOCK DIAGRAM 63
2.7 MIPS CNT 74
2.7.1 REGISTERS 74
2.8 GENERAL PURPOSE IO 76
2.8.1 FEATURES 76
2.8.2 BLOCK DIAGRAM 76
2.8.3 GPIO PIN MAPPING 77
2.8.4 REGISTER 77
2.9 SPI SLAVE 91
2.9.1 SPI SLAVE CONTROL 91
2.9.2 REGSITERS 93
2.10 I^2C CONTROLLER 96
2.10.1 FEATURES 96
2.10.2 LIST OF REGISTERS 96
2.11 I2S CONTROLLER 103
2.11.1 FEATURES 103
2.11.2 BLOCK DIAGRAM 103
2.11.3 REGISTERS 104

MEDIATEK CONFIDENTIAL
FOR facwang@symnex.com.tw USE ONLY

This document contains information that is proprietary to MediaTek Inc.
Unauthorized reproduction or disclosure of this information in whole or in part is strictly prohibited.

2.12 SPI CONTROLLER 110
2.12.1 FEATURES 110
2.12.2 BLOCK DIAGRAM 110
2.12.3 REGISTERS 110
2.13 UART LITE 121
2.13.1 FEATURES 121
2.13.2 REGISTERS 121
2.14 PCM CONTROLLER 135
2.14.1 FEATURES 135
2.14.2 BLOCK DIAGRAM 135
2.14.3 LIST OF REGISTERS 136
2.14.4 PCM CONFIGURATION 136
2.14.5 REGISTER 138
2.15 GENERIC DMA CONTROLLER 155
2.15.1 FEATURES 155
2.15.2 BLOCK DIAGRAM 155
2.15.3 PERIPHERAL CHANNEL CONNECTION 155
2.15.4 REGISTERS 156
2.16 AES CONTROLLER 204
2.16.1 REGISTERS 204
2.17 PWM (PULSE WIDTH MODULATION) 214
2.17.1 REGISTERS 214
2.18 FRAME ENGINE 232
2.18.1 REGISTERS 232
2.19 SWITCH CONTROLLER 251
2.19.1 REGISTERS 251
2.20 MSDC 301
2.20.1 REGISTERS 301
2.21 PCI EXPRESS 328
2.21.1 REGISTERS 328
2.22 USB HOST CONTROLLER 336
2.22.1 REGISTERS 336
3. LIST 345

MEDIATEK CONFIDENTIAL
FOR farrwang@symnex.com.tw USE ONLY

This document contains information that is proprietary to MediaTek Inc.
Unauthorized reproduction or disclosure of this information in whole or in part is strictly prohibited.

Table of Figures

FIGURE 1-1 MT7628 BLOCK DIAGRAM 2
FIGURE 1-1 MIPS 24KEC CPU BLOCK DIAGRAM 9
FIGURE 1-2 MT7628 CLOCK DIAGRAM 12
FIGURE 2-1 SYSTEM CONTROL BLOCK DIAGRAM 14
FIGURE 2-2 TIMER BLOCK DIAGRAM 32
FIGURE 2-9 QOS ARBITRATION BLOCK DIAGRAM 63
FIGURE 2-3 PROGRAMMABLE I/O BLOCK DIAGRAM 76
FIGURE 2-7 I^2S TRANSMITTER BLOCK DIAGRAM 103
FIGURE 2-8 I2S TRANSMIT/RECEIVE 103
FIGURE 2-6 SPI CONTROLLER BLOCK DIAGRAM 110
FIGURE 2-4 PCM CONTROLLER BLOCK DIAGRAM 135
FIGURE 2-5 GENERIC DMA CONTROLLER BLOCK DIAGRAM 155

MEDIATEK CONFIDENTIAL
FOR farrwang@ synnex.com.tw USE ONLY

This document contains information that is proprietary to MediaTek Inc.
Unauthorized reproduction or disclosure of this information in whole or in part is strictly prohibited.

List of Tables

TABLE 1 THE IIR[5:0] CODES ASSOCIATED WITH THE POSSIBLE INTERRUPTS 123
TABLE 2 DIVISOR NEEDED TO GENERATE A GIVEN BAUD RATE 128
TABLE 3 DIVISOR NEEDED TO GENERATE A GIVEN BAUD RATE FROM 13MHZ BASED ON DIFFERENT HIGHSPEED VALUE 130
TABLE 4 DIVISOR NEEDED TO GENERATE A GIVEN BAUD RATE FROM 26 MHZ BASED ON DIFFERENT HIGHSPEED VALUE 131
TABLE 5 DIVISOR NEEDED TO GENERATE A GIVEN BAUD RATE FROM 52 MHZ BASED ON DIFFERENT HIGHSPEED VALUE 131

MEDIATEK CONFIDENTIAL
FOR farrwang@ synnex.com.tw USE ONLY

This document contains information that is proprietary to MediaTek Inc.
Unauthorized reproduction or disclosure of this information in whole or in part is strictly prohibited.

1. MIPS 24KEc Processor

1.1 Features

- 8-stage pipeline
- 32-bit address paths
- 64-bit data paths to caches and external interfaces
- MIPS32-Compatible Instruction Set
  - Multiply-Accumulate and Multiply-Subtract Instructions (MADD, MADDU, MSUB, MSUBU)
  - Targeted Multiply Instruction (MUL)
  - Zero/One Detect Instructions (CLZ, CLO)
  - Wait instructions (WAIT)
  - Conditional Move instructions (MOVZ, MOVN)
  - Prefetch instructions (PREF)
- MIPS32 Enhanced Architecture (Release 2) Features
  - Vectored interrupts and support for an external interrupt controller
  - Programmable exception vector base
  - Atomic interrupt enable/disable
  - GPR shadow registers (one, three or seven additional shadows can be optionally added to minimize latency for interrupt handlers)
  - Bit field manipulation instructions
- MIPS32 Privileged Resource Architecture
  - MIPS DSP ASE
  - Fractional data types (Q15, Q31)
  - Saturating arithmetic
  - SIMD instructions operate on 2x16 b or 4x8 b simultaneously
  - 3 additional pairs of accumulator registers
- Programmable Memory Management Unit
  - 32 dual-entry JTLB with variable page sizes
  - 4-entry ITLB
  - 8-entry DTLB
  - Optional simple Fixed Mapping Translation (FMT) mechanism
- MIPS16e™ Code Compression
  - 16-bit encodings of 32-bit instructions to improve code density
  - Special PC-relative instructions for efficient loading of addresses and constants
  - SAVE & RESTORE macro instructions for setting up and tearing down stack frames within subroutines
  - Improved support for handling 8 and 16-bit datatypes
- Programmable L1 Cache Sizes
  - Instruction cache size: 32 KB
  - Data cache size: 16 KB
- 4-Way Set Associative
  - Up to 8 outstanding load misses
  - Write-back and write-through support
  - 32-byte cache line size

MEDIATEK CONFIDENTIAL
FOR farrwang@symnex.com.tw USE ONLY

© 2014 MediaTek Inc.

This document contains information that is proprietary to MediaTek Inc.
Unauthorized reproduction or disclosure of this information in whole or in part is strictly prohibited.

1.2 Block Diagram

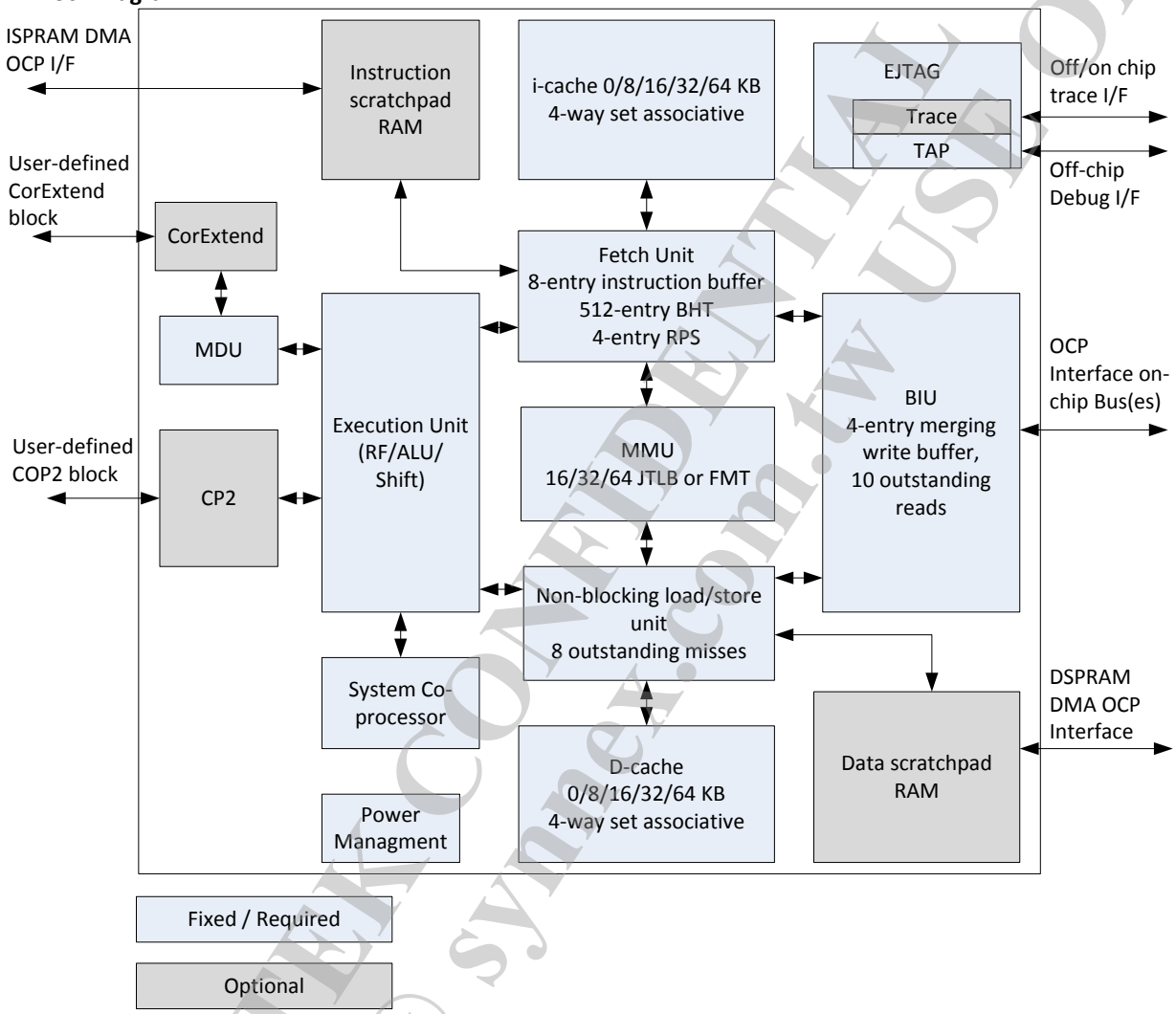

Figure 1-1 MIPS 24KEc CPU Block Diagram

MEDIATEK CONFIDENTIAL
FOR farrwang@symnex.com.tw USE ONLY

This document contains information that is proprietary to MediaTek Inc.
Unauthorized reproduction or disclosure of this information in whole or in part is strictly prohibited.

1.3 Memory Map Summary

Start		End	Size	Description
0000.0000	-	0FFF.FFFF	256 MBytes	DDR 256 MB
1000.0000	-	1000.00FF	256 Bytes	SYSCTL
1000.0100	-	1000.01FF	256 Bytes	TIMER
1000.0200	-	1000.02FF	256 Bytes	INTCTL
1000.0300	-	1000.03FF	256 Bytes	EXT_MC_ARB (DDR/DDR II)
1000.0400	-	1000.04FF	256 Bytes	Rbus Matrix CTRL
1000.0500	-	1000.05FF	256 Bytes	MIPS CNT
1000.0600	-	1000.06FF	256 Bytes	GPIO
1000.0700	-	1000.07FF	256 Bytes	SPI Slave
1000.0800	-	1000.08FF	256 Bytes	<<Reserved>>
1000.0900	-	1000.09FF	256 Bytes	I2C
1000.0A00	-	1000.0AFF	256 Bytes	I2S
1000.0B00	-	1000.0BFF	256 Bytes	SPI Master
1000.0C00	-	1000.0CFF	256 Bytes	UARTLITE 1
1000.0D00	-	1000.0DFF	256 Bytes	UARTLITE 2
1000.0E00	-	1000.0EFF	256 Bytes	UARTLITE 3
1000.0F00	-	1000.0FFF	256 Bytes	<<Reserved>>
1000.1000	-	1000.17FF	2 KBytes	RGCTL
1000.1800	-	1000.1FFF	2 KBytes	<<Reserved>>
1000.2000	-	1000.27FF	2 KBytes	PCM (up to 16 channels)
1000.2800	-	1000.2FFF	2 KBytes	Generic DMA (up to 16 channels)
1000.3000	-	1000.3FFF	4 KBytes	<<Reserved>>
1000.4000	-	1000.4FFF	4 KBytes	AES Engine
1000.5000	-	1000.5FFF	4 Kbytes	PWM
1000.6000	-	100F.FFFF		<<Reserved>>
1010.0000	-	1010.FFFF	64 Kbytes	Frame Engine
1011.0000	-	1011.7FFF	32 KBytes	Ethernet Switch
1011.8000	-	1011.FFFF	32 KBytes	<<Reserved>>
1012.0000		1012.7FFF	32 KBytes	USB PHY
1012.8000	-	1012.FFFF	32 KBytes	<<Reserved>>
1013.0000	-	1013.7FFF	32 KBytes	SDXC / eMMC
1013.8000	-	1013.FFFF	32 KBytes	<<Reserved>>
1014.0000	-	1017.FFFF	256 KBytes	PCI Experss
1018.0000	-	101B.FFFF	256 KBytes	<<Reserved>>
101C.0000	-	101F.FFFF	256 KBytes	USB Host Controller
1020.0000	-	102F.FFFF	1 MBytes	<<Reserved>>
1030.0000	-	103F.FFFF	1 MBytes	WLAN MAC/BBP
1040.0000	-	1BFF.FFFF		<<Reserved>>
1C00.0000	-	1C3F.FFFF	4 MBytes	SPI Flash Direct Access
1C40.0000	-	1FFF.FFFF		<<Reserved>>
2000.0000	-	2FFF.FFFF	256 MBytes	PCIE Direct Access
3000.9999	-	3FFF.FFFF		<<Reserved>>

MEDIATEK CONFIDENTIAL
FOR farwing@ymc.com.tw USE ONLY

This document contains information that is proprietary to MediaTek Inc.
Unauthorized reproduction or disclosure of this information in whole or in part is strictly prohibited.

1.3 Interupt Table Summary

SI_Int -

	Module	Source Pin	Level/Edge
SI_Int0	soc_cirq	cpu_irq0	Level
SI_Int1	soc_cirq	cpu_irq1	Level
SI_Int2	PCIE	pcie_int_req	Level
SI_Int3	FE	fe_int_req	Level
SI_Int4	WLAN	wlan_int_req	Level
SI_Int5	MIPS24Kec/aux_tick	SI_TIMERInt/stk_int	Level

INTC -

	Module	Source Pin	Level/Edge
soc_cirq_int0	SYSCTL	sysctl_int	Level
soc_cirq_int1	SPIS	SW interrupt	Level
soc_cirq_int2			
soc_cirq_int3	DRAMC	mc_int	Level
soc_cirq_int4	PCM	pcm_int	Level
soc_cirq_int5			
soc_cirq_int6	GPIO	gpio_int	Level
soc_cirq_int7	GDMA	gdma_int	Level
soc_cirq_int8			
soc_cirq_int9	MIPS24Kec	pc_int	Level
soc_cirq_int10	I2S	i2s_int	Level
soc_cirq_int11	SPI	spi_int	Level
soc_cirq_int12			
soc_cirq_int13	AES	aes_int	Level
soc_cirq_int14	SDXC	sdxc_int	Level
soc_cirq_int15	PCTRL	r2p_int	Level
soc_cirq_int16	PCIE	pcie_link_down_rst_int	Level
soc_cirq_int17	ESW	esw_int	Level
soc_cirq_int18	USB20	uhstl_int	Level
soc_cirq_int19			
soc_cirq_int20	UART-LITE	uart0_int	Level
soc_cirq_int21	UART-LITE	uart1_int	Level
soc_cirq_int22	UART-LITE	uart2_int	Level
soc_cirq_int23	TIMER	wdtimer_int	Level
soc_cirq_int24	TIMER	timer0_int	Level
soc_cirq_int25	TIMER	timer1_int	Level
soc_cirq_int26	PWM	pwm_irq	Level
soc_cirq_int27	WLAN	wlan_wakeup_int	Level
soc_cirq_int28			
soc_cirq_int29			
soc_cirq_int30			
soc_cirq_int31			

MEDIATEK CONFIDENTIAL
FOR farrwang@symex.com.tw USE ONLY

This document contains information that is proprietary to MediaTek Inc.
Unauthorized reproduction or disclosure of this information in whole or in part is strictly prohibited.

1.4 Clock Plan

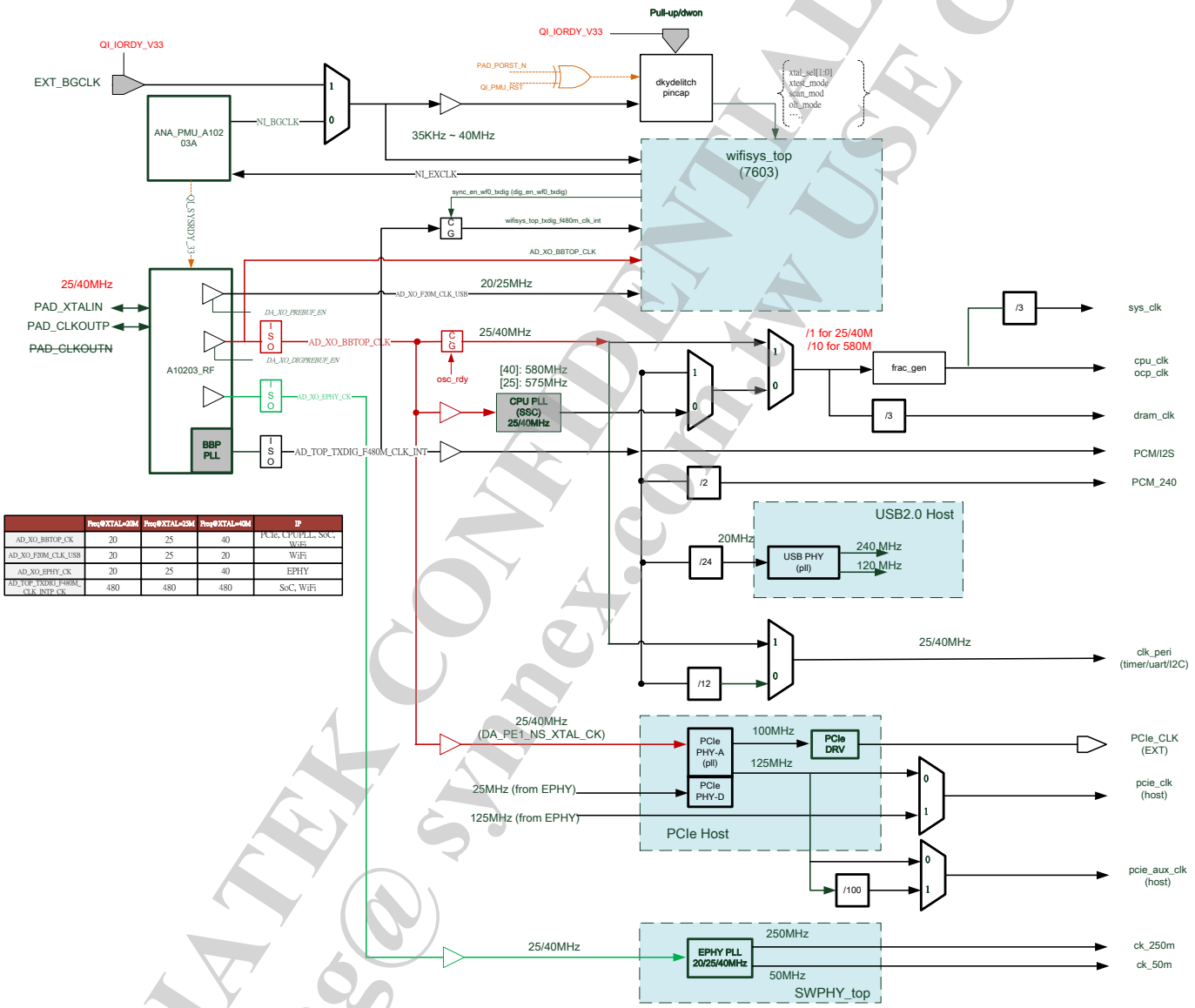

	Freq@XTAL=20M	Freq@XTAL=25M	Freq@XTAL=40M	IP
AD_XO_BBTOP_CK	20	25	40	PCIe, CPUPLL, SoC, WiFi
AD_XO_F20M_CLK_USB	20	25	20	WiFi
AD_XO_EPHY_CK	20	25	40	EPHY
AD_TOP_TXDIG_F480M_CLK_INTP_CK	480	480	480	SoC, WiFi

Figure 1-2 MT7628 Clock Diagram

MEDIATEK CONFIDENTIAL
FOR farrwang@synnex.com.tw USE ONLY

© 2014 MediaTek Inc.

This document contains information that is proprietary to MediaTek Inc.
Unauthorized reproduction or disclosure of this information in whole or in part is strictly prohibited.

2. Registers

2.1 Nomenclature

The following nomenclature is used for register types:

RO	Read Only
WO	Write Only
RW	Read or Write
RC	Read Clear
W1C	Write One Clear
-	Reserved bit
X	Undefined binary value

MEDIATEK CONFIDENTIAL
FOR farrwang@ synnex.com.tw USE ONLY

This document contains information that is proprietary to MediaTek Inc.
Unauthorized reproduction or disclosure of this information in whole or in part is strictly prohibited.

2.2 System Control

2.2.1 Features

- Provides read-only chip revision registers
- Provides a window to access boot-strapping signals
- Supports memory remapping configurations
- Supports software reset to each platform building block
- Provides registers to determine GPIO and other peripheral pin muxing schemes
- Provides some power-on-reset only test registers for software programmers
- Combines miscellaneous registers (such as clock skew control, status register, memo registers, etc)

2.2.2 Block Diagram

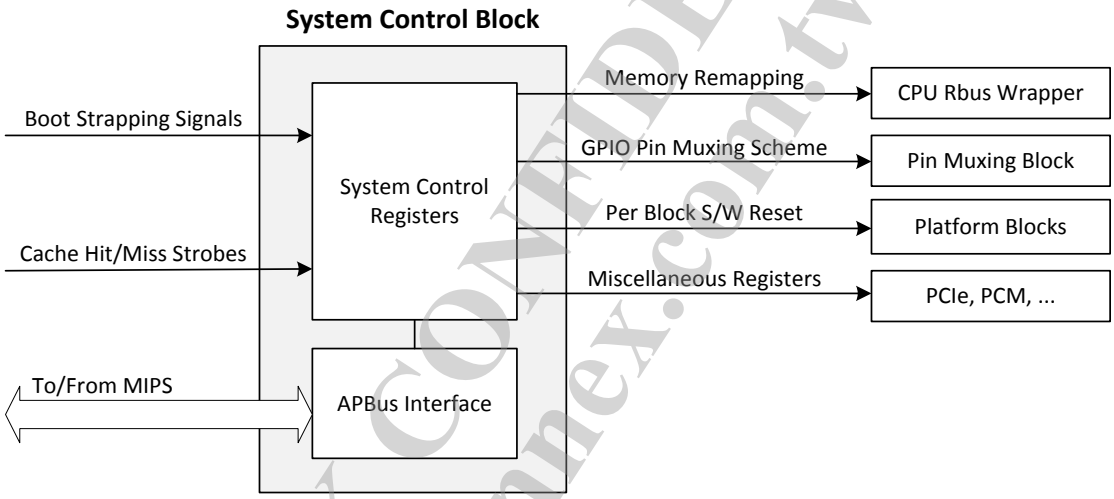

Figure 2-1 System Control Block Diagram

MEDIATEK CONFIDENTIAL
FOR farrwang@symnex.com.tw USE ONLY

© 2014 MediaTek Inc.
This document contains information that is proprietary to MediaTek Inc.

2.2.3 Registers

SYSCTL Changes LOG

Revision	Date	Author	Change Log
0.1	2013/10/3	PeterCT Wu	Initial for MT7628
0.2	2014/4/28	PeterCT Wu	MT7628 E2

Module name: SYSCTL Base address: (+10000000h)

Address	Name	Width	Register Function
10000000	CHIPID0_3	32	CHIP ID ASCII Character 0-3
10000004	CHIPID4_7	32	CHIP ID ASCII Character 4-7
10000008	EE_CFG	32	E-Fuse Configuration
1000000C	CHIP_REV_ID	32	Chip Revision Identification
10000010	SYSCFG0	32	System Configuration Register 0
10000014	SYSCFG1	32	System Configuration Register 1
10000018	TESTSTAT	32	Firmware Test Status
1000001C	TESTSTAT2	32	Firmware Test Status 2
10000028	ROM_STATUS	32	Andes ROM Status
1000002C	CLKCFG0	32	Clock Configuration Register 0
10000030	CLKCFG1	32	Clock Configuration Register 1
10000034	RSTCTL	32	Reset Control Register
10000038	RSTSTAT	32	Reset Status Register
1000003C	AGPIO_CFG	32	Analog GPIO Configuration
10000040	N9_GPIO_INT	32	Andes GPIO Interrupt
10000044	N9_GPIO_MASK	32	Andes GPIO Mask
10000060	GPIO1_MODE	32	GPIO1 purpose selection
10000064	GPIO2_MODE	32	GPIO2 purpose selection
10000068	MEMO1	32	Memory1
1000006C	MEMO2	32	Memory2
10000070	EXT_MEMO1	32	Extend Application #1
10000074	EXT_MEMO2	32	Extend Application #2
10000078	EXT_MEMO3	32	Extend Application #3
1000007C	EXT_MEMO4	32	Extend Application #4

10000000 CHIPID0_3 CHIP ID ASCII Character 0-3 **3637544D**

Bit	31	30	29	28	27	26	25	24	23	22	21	20	19	18	17	16
Name	CHIP_ID3								CHIP_ID2							
Type	RO								RO							
Reset	0	0	1	1	0	1	1	0	0	0	1	1	0	1	1	1
Bit	15	14	13	12	11	10	9	8	7	6	5	4	3	2	1	0
Name	CHIP_ID1								CHIP_ID0							
Type	RO								RO							
Reset	0	1	0	1	0	1	0	0	0	1	0	0	1	1	0	1

Bit(s)	Name	Description

FOR MEDIATEK CONFIDENTIAL
fairwang@systemcom.tw USE ONLY

This document contains information that is proprietary to MediaTek Inc.
Unauthorized reproduction or disclosure of this information in whole or in part is strictly prohibited.

Bit(s)	Name	Description
31:24	CHIP_ID3	**ASCII CHIP Name Identification Character 3**
23:16	CHIP_ID2	**ASCII CHIP Name Identification Character 2**
15:8	CHIP_ID1	**ASCII CHIP Name Identification Character 1**
7:0	CHIP_ID0	**ASCII CHIP Name Identification Character 0**

10000004 **CHIPID4_7** **CHIP ID ASCII Character 4-7** **20203832**

Bit	31	30	29	28	27	26	25	24	23	22	21	20	19	18	17	16
Name	CHIP_ID7								CHIP_ID6							
Type	RO								RO							
Reset	0	0	1	0	0	0	0	0	0	0	1	0	0	0	0	0
Bit	15	14	13	12	11	10	9	8	7	6	5	4	3	2	1	0
Name	CHIP_ID5								CHIP_ID4							
Type	RO								RO							
Reset	0	0	1	1	1	0	0	0	0	0	1	1	0	0	1	0

Bit(s)	Name	Description
31:24	CHIP_ID7	**ASCII CHIP Name Identification Character 3**
23:16	CHIP_ID6	**ASCII CHIP Name Identification Character 2**
15:8	CHIP_ID5	**ASCII CHIP Name Identification Character 1**
7:0	CHIP_ID4	**ASCII CHIP Name Identification Character 0**

10000008 **EE_CFG** **E-Fuse Configuration** **00000000**

Bit	31	30	29	28	27	26	25	24	23	22	21	20	19	18	17	16
Name	EE_CFG1															
Type	RO															
Reset	0	0	0	0	0	0	0	0	0	0	0	0	0	0	0	0
Bit	15	14	13	12	11	10	9	8	7	6	5	4	3	2	1	0
Name	EE_CFG0															
Type	RO															
Reset	0	0	0	0	0	0	0	0	0	0	0	0	0	0	0	0

Bit(s)	Name	Description
31:16	EE_CFG1	**E-Fuse Configuration 1**
15:0	EE_CFG0	**E-Fuse Configuration 0**

1000000C **CHIP_REV_ID** **Chip Revision Identification** **00010102**

Bit	31	30	29	28	27	26	25	24	23	22	21	20	19	18	17	16
Name																PKG_ID
Type																RO
Reset																1
Bit	15	14	13	12	11	10	9	8	7	6	5	4	3	2	1	0
Name					VER_ID								ECO_ID			
Type					RO								RO			
Reset					0	0	0	1					0	0	1	0

MEDIATEK CONFIDENTIAL
FOR FARYANE@SYNNEX.COM.TW USE ONLY

© 2014 MediaTek Inc.
This document contains information that is proprietary to MediaTek Inc.
Unauthorized reproduction or disclosure of this information in whole or in part is strictly prohibited.

Bit(s)	Name	Description
16	PKG_ID	**Package ID** 0: DRQFN10x10-110 1: DRQFN12x12-156
11:8	VER_ID	**Chip Version ID**
3:0	ECO_ID	**Chip ECO ID**

10000010 **SYSCFG0** **System Configuration Register 0** **00000100**

Bit	31	30	29	28	27	26	25	24	23	22	21	20	19	18	17	16
Name	TEST_CODE											BS_SHADOW[8:4]				
Type	RW											RO				
Reset	0	0	0	0	0	0	0	0				0	0	0	0	0
Bit	15	14	13	12	11	10	9	8	7	6	5	4	3	2	1	0
Name	BS_SHADOW[3:0]							DBG_JTAG_MODE	TEST_MODE_1	XTAL_FREQ_SEL	EXT_BG	TEST_MODE_0	CHIP_MODE			DRAM_TYPE
Type	RO							RO	RO	RO	RO	RO	RO			RO
Reset	0	0	0	0				1	0	0	0	0	0	0	0	0

Bit(s)	Name	Description
31:24	TEST_CODE	**Default value is from bootstrap and can be modified by software.**
20:12	BS_SHADOW	**BS shadow register for last boot-up value (by manual boot-strap SYSCFG1.PULL_EN)** Displays a backup copy of the last bootup value
8	DBG_JTAG_MODE	**JTAG for MIPS and Andes** 1: Normal Boot-up 0: JTAG mode(MIPS & Andes)
7	TEST_MODE_1	**Test Mode[1:0]**
6	XTAL_FREQ_SEL	**XTAL Frequency Selection** 0: 25MHz DIP 1: 40MHz SMD (3225)
5	EXT_BG	**External BG Clock** 0: BG clock from PMU 1: BG clock from the external pin
4	TEST_MODE_0	**Test Mode[1:0]** 0: SUTIF 1: 3-wire SPI
3:1	CHIP_MODE	Chip Mode A vector to set chip function/test/debug modes in non-test/debug operation. For more information see the Bootstrapping Pins Description in the datasheet for this chip. 000: Boot from PLL (boot from SPI 3-Byte ADR) 001: Boot from PLL (boot from SPI 4-Byte ADR) 010: Boot from XTAL (boot from SPI 3-Byte ADR) 011: Boot from XTAL (boot from SPI 4-Byte ADR) 100: SCAN mode 101: IDDQ mode 110: Power-On mode 111: UTIF test mode

MEDIATEK CONFIDENTIAL
FOR farrwana@synflex.com.tw USE ONLY

This document contains information that is proprietary to MediaTek Inc.
Unauthorized reproduction or disclosure of this information in whole or in part is strictly prohibited.

Bit(s)	Name	Description
0	DRAM_TYPE	**DDR type** [note] This DDR attribute is not valid for KN package.. (7628KN has DDR1 KGD) 0: DDR2 1: DDR1

10000014 **SYSCFG1** **System Configuration Register 1** **00000000**

Bit	31	30	29	28	27	26	25	24	23	22	21	20	19	18	17	16
Name																PULL_EN
Type																RW
Reset																0
Bit	15	14	13	12	11	10	9	8	7	6	5	4	3	2	1	0
Name																
Type																
Reset																

Bit(s)	Name	Description
16	PULL_EN	**Internal Manual Boot-Strap** 1: enable 0: disable

10000018 **TESTSTAT** **Firmware Test Status** **00000000**

Bit	31	30	29	28	27	26	25	24	23	22	21	20	19	18	17	16
Name	TESTSTAT[31:16]															
Type	RW															
Reset	0	0	0	0	0	0	0	0	0	0	0	0	0	0	0	0
Bit	15	14	13	12	11	10	9	8	7	6	5	4	3	2	1	0
Name	TESTSTAT[15:0]															
Type	RW															
Reset	0	0	0	0	0	0	0	0	0	0	0	0	0	0	0	0

Bit(s)	Name	Description
31:0	TESTSTAT	**Firmware Test Status register** NOTE: This register is reset only by a power-on reset.

1000001C **TESTSTAT2** **Firmware Test Status 2** **00000000**

Bit	31	30	29	28	27	26	25	24	23	22	21	20	19	18	17	16
Name	TESTSTAT2[31:16]															
Type	RW															
Reset	0	0	0	0	0	0	0	0	0	0	0	0	0	0	0	0
Bit	15	14	13	12	11	10	9	8	7	6	5	4	3	2	1	0
Name	TESTSTAT2[15:0]															
Type	RW															
Reset	0	0	0	0	0	0	0	0	0	0	0	0	0	0	0	0

Bit(s)	Name	Description

FOR MEDIATEK CONFIDENTIAL
fanwang@synnex.com USE ONLY

This document contains information that is proprietary to MediaTek Inc.
Unauthorized reproduction or disclosure of this information in whole or in part is strictly prohibited.

Bit(s)	Name	Description
31:0	TESTSTAT2	**Firmware Test Status Register 2** NOTE: This register is reset only by a power-on reset.

10000028 **ROM_STATUS** **Andes ROM Status** **00000000**

Bit	31	30	29	28	27	26	25	24	23	22	21	20	19	18	17	16
Name																
Type																
Reset																
Bit	15	14	13	12	11	10	9	8	7	6	5	4	3	2	1	0
Name									STATUS							
Type									RO							
Reset									0	0	0	0	0	0	0	0

Bit(s)	Name	Description
7:0	STATUS	**Andes ROM Status** 0: Power-on default 1: ROM initialization done 2: Wifi driver loaded

1000002C **CLKCFG0** **Clock Configuration Register 0** **00201000**

Bit	31	30	29	28	27	26	25	24	23	22	21	20	19	18	17	16
Name			OSC_1US_DIV							INT_CLK_FDIV						INT_CLK_FFRAC[4:4]
Type			RW							RW						RW
Reset			0	0	0	0	0	0		0	1	0	0	0		0
Bit	15	14	13	12	11	10	9	8	7	6	5	4	3	2	1	0
Name	INT_CLK_FFRAC[3:0]				REFCLK0_RATE				DIS_N9		PCIE_EXT_125M	PERI_CLK_SEL	DIS_BBP_SLEEP	EN_BBP_CLK	CPU_FRM_BBP	CPU_FRM_XTAL
Type	RW				RW				RW		RW	RW	RW	RW	RW	RW
Reset	0	0	0	1	0	0	0		0		0	0	0	0	0	0

Bit(s)	Name	Description
29:24	OSC_1US_DIV	**Oscillator 1 usec Divider** Sets the maximum for the reference clock counter for either a 20 MHz or 40 MHz external XTAL input. The count increments each 1usec (indicating 1 MHz), up to the maximum, before resetting to zero. This counts the frequency of an external XTAL. This count is used to output a 32 KHz frequency to the REFCLK0 pin. 0: Automatically generates a 1 usec system tick regardless of whether XTAL frequency is 20 MHz or 40 MHz. 39: Default value for an external 40 MHz XTAL. 19: Default value for an external 20 MHz XTAL. Others: Manual mode for tick generation.
22:18	INT_CLK_FDIV	**Internal Clock Frequency Divider for I2S/PCM** The frequency divider used to generate the Fraction-N clock frequency.

MEDIATEK CONFIDENTIAL
FOR farrwang@symnex.com.tw USE ONLY

This document contains information that is proprietary to MediaTek Inc.
Unauthorized reproduction or disclosure of this information in whole or in part is strictly prohibited.

Bit(s)	Name	Description
		Valid values range from 1 to 31. Fraction-N clock frequency = (INT_CLK_FFRAC/INT_CLK_FDIV)*PLL_FREQ
16:12	INT_CLK_FFRAC	**Internal Clock Fraction-N Frequency for I2S/PCM** A parameter used in conjunction with INT_CLK_FDIV to generate the Fraction-N clock frequency. Valid values range from 0 to 31. Fraction-N clock Frequency = (INT_CLK_FFRAC/INT_CLK_FDIV)*PLL_FREQ
11:9	REFCLK0_RATE	**Output clock rate of reference Clock 0** 7: CPUPLL Clock/8 6: Off 5: Internal Fraction-N_CLK/2 (I2S/PCM) 4: 48 MHz 3: 40 MHz 2: 25 MHz 1: 12 MHz 0: Xtal clock(25/40 MHz by boot strap)
7	DIS_N9	**Pause Andes Execution** [Note] This bit is initialized by HW STRAP and can be changed by SW afterwards. 1: Enable 0: default
5	PCIE_EXT_125M	**PCIe 125MHZ Clock Source** 1: Ext. 125MHz Source (EPHY) 0: PCIe PHY 125M
4	PERI_CLK_SEL	**Peripheral Clock Source Select** 1: XTAL input 0: 40 MHz from BBP 480 MHz divided by 12
3	DIS_BBP_SLEEP	**BBPPLL Sleep Mode Control** 1: Disable BBPPLL entering SLEEP mode 0: BBPPLL SLEEP mode
2	EN_BBP_CLK	**BBPPLL 480MHz Clock** 1: BBPPLL Clock Enable 0: BBPPLL Clock Disable
1	CPU_FRM_BBP	**CPU clock from BBPPLL** 1: 480MHz BBPPLL 0: 580MHz CPUPLL
0	CPU_FRM_XTAL	**CPU clock from XTAL** [Note] This bit is initialized by HW STRAP and can be changed by SW afterwards. 1: XTAL input 0: CPUPLL

10000030 **CLKCFG1** **Clock Configuration Register 1** **F69F7F00**

Bit	31	30	29	28	27	26	25	24	23	22	21	20	19	18	17	16
Name	PWM_CLK_EN	SDXC_CLK_EN	CRYPTO_CLK_EN	MIPSC_CLK_EN		PCIE_CLK_EN	UPHY_CLK_EN		ETH_CLK_EN			UART2_CLK_EN	UART1_CLK_EN	SPI_CLK_EN	I2S_CLK_EN	I2C_CLK_EN
Type	RW	RW	RW	RW		RW	RW		RW			RW	RW	RW	RW	RW
Reset	1	1	1	1		1	1		1			1	1	1	1	1
Bit	15	14	13	12	11	10	9	8	7	6	5	4	3	2	1	0

MEDIATEK CONFIDENTIAL
FOR taiwan@sunnex.com.tw USE ONLY

This document contains information that is proprietary to MediaTek Inc.
Unauthorized reproduction or disclosure of this information in whole or in part is strictly prohibited.

Name		GDMA_CLK_EN	PIO_CLK_EN	UART0_CLK_EN	PCM_CLK_EN	MC_CLK_EN	INT_CLK_EN	TIMER_CLK_EN								
Type		RW	RW	RW	RW	RW	RW	RW								
Reset		1	1	1	1	1	1	1								

Bit(s)	Name	Description
31	PWM_CLK_EN	**PWM clock control** 1: Clock Enable 0: Clock Disable
30	SDXC_CLK_EN	**SDXC clock control** 1: Clock Enable 0: Clock Disable
29	CRYPTO_CLK_EN	**AUX system tick counter clock control** 1: Clock Enable 0: Clock Disable
28	MIPSC_CLK_EN	**MIPS Counter clock control** 1: Clock Enable 0: Clock Disable
26	PCIE_CLK_EN	**PCIE2 clock control** 1: Clock Enable 0: Clock Disable
25	UPHY_CLK_EN	**UPHY clock control** 1: Clock Enable 0: Clock Disable
23	ETH_CLK_EN	**ETH clock control** 1: Clock Enable 0: Clock Disable
20	UART2_CLK_EN	**UART2 clock control** 1: Clock Enable 0: Clock Disable
19	UART1_CLK_EN	**UART1 clock control** 1: Clock Enable 0: Clock Disable
18	SPI_CLK_EN	**SPI clock control** 1: Clock Enable 0: Clock Disable
17	I2S_CLK_EN	**I2S clock control** 1: Clock Enable 0: Clock Disable
16	I2C_CLK_EN	**I2C clock control** 1: Clock Enable 0: Clock Disable
14	GDMA_CLK_EN	**GDMA clock control** 1: Clock Enable 0: Clock Disable
13	PIO_CLK_EN	**PIO clock control** 1: Clock Enable 0: Clock Disable
12	UART0_CLK_EN	**UART0 clock control** 1: Clock Enable 0: Clock Disable
11	PCM_CLK_EN	**PCM clock control**

MEDIATEK CONFIDENTIAL
FOR fairwang@symnex.com.tw USE ONLY

This document contains information that is proprietary to MediaTek Inc.
Unauthorized reproduction or disclosure of this information in whole or in part is strictly prohibited.

Bit(s)	Name	Description
		1: Clock Enable 0: Clock Disable
10	MC_CLK_EN	**MC clock control** 1: Clock Enable 0: Clock Disable
9	INT_CLK_EN	**INT clock control** 1: Clock Enable 0: Clock Disable
8	TIMER_CLK_EN	**TIMER clock control** 1: Clock Enable 0: Clock Disable

10000034 **RSTCTL** **Reset Control Register** **04000400**

Bit	31	30	29	28	27	26	25	24	23	22	21	20	19	18	17	16
Name	PWM_RST	SDXC_RST	CRYPTO_RST	AUX_STCK_RST		PCIE_RST		EPHY_RST	ETH_RST	UHST_RST		UART2_RST	UART1_RST	SPI_RST	I2S_RST	I2C_RST
Type	RW	RW	RW	RW		RW		RW	RW	RW		RW	RW	RW	RW	RW
Reset	0	0	0	0		1		0	0	0		0	0	0	0	0
Bit	15	14	13	12	11	10	9	8	7	6	5	4	3	2	1	0
Name		GDMA_RST	PIO_RST	UART0_RST	PCM_RST	MC_RST	INT_RST	TIMER_RST			HIF_RST	WIFI_RST	SPIS_RST			SYS_RST
Type		RW	RW	RW	RW	RW	RW	RW			RW	RW	RW			W1C
Reset		0	0	0	0	1	0	0			0	0	0			0

Bit(s)	Name	Description
31	PWM_RST	**PWM reset control** 1: Reset Assert 0: Reset Deassert
30	SDXC_RST	**SDXC reset control** 1: Reset Assert 0: Reset Deassert
29	CRYPTO_RST	**Crypto engine reset control** 1: Reset Assert 0: Reset Deassert
28	AUX_STCK_RST	**AUX system tick counter clock control** 1: Reset Assert 0: Reset Deassert
26	PCIE_RST	**PCIE reset control** 1: Reset Assert 0: Reset Deassert
24	EPHY_RST	**EPHY reset control** 1: Reset Assert 0: Reset Deassert
23	ETH_RST	**ETH reset control** 1: Reset Assert 0: Reset Deassert

MEDIATEK CONFIDENTIAL
FOR farrwang@symtex.com.tw USE ONLY

This document contains information that is proprietary to MediaTek Inc.
Unauthorized reproduction or disclosure of this information in whole or in part is strictly prohibited.

Bit(s)	Name	Description
22	UHST_RST	**USB PHY reset control** 1: Reset Assert 0: Reset Deassert
20	UART2_RST	**UART2 reset control** 1: Reset Assert 0: Reset Deassert
19	UART1_RST	**UART1 reset control** 1: Reset Assert 0: Reset Deassert
18	SPI_RST	**SPI reset control** 1: Reset Assert 0: Reset Deassert
17	I2S_RST	**I2S reset control** 1: Reset Assert 0: Reset Deassert
16	I2C_RST	**I2C reset control** 1: Reset Assert 0: Reset Deassert
14	GDMA_RST	**GDMA reset control** 1: Reset Assert 0: Reset Deassert
13	PIO_RST	**PIO reset control** 1: Reset Assert 0: Reset Deassert
12	UART0_RST	**UART0 reset control** 1: Reset Assert 0: Reset Deassert
11	PCM_RST	**PCM reset control** 1: Reset Assert 0: Reset Deassert
10	MC_RST	**MC reset control** 1: Reset Assert 0: Reset Deassert
9	INT_RST	**INT reset control** 1: Reset Assert 0: Reset Deassert
8	TIMER_RST	**TIMER reset control** 1: Reset Assert 0: Reset Deassert
5	HIF_RST	**WIFI HIF reset control** [Note] WPDMA reset control 1: Reset Assert 0: Reset Deassert
4	WIFI_RST	**WIFI reset control** [Note] This bit will reset Andes and initialize XTAL and BBPPLL again, MIPS must carefully use it. 1: Reset Assert 0: Reset Deassert
3	SPIS_RST	**SPI Slave control** 1: Reset Assert 0: Reset Deassert
0	SYS_RST	**Whole System Reset Control** [Note] Except for power-on CR, this bit reset the whole system include itself.

MEDIATEK CONFIDENTIAL
FOR farrwang@symnex.com.tw USE ONLY

This document contains information that is proprietary to MediaTek Inc.
Unauthorized reproduction or disclosure of this information in whole or in part is strictly prohibited.

Bit(s)	Name	Description
		1: Whole System Reset 0: NA

10000038 **RSTSTAT** **Reset Status Register** **C0030000**

Bit	31	30	29	28	27	26	25	24	23	22	21	20	19	18	17	16
Name	WDT2SYSRST_EN	WDT2RSTO_EN	WDTRSTPD													
Type	RW	RW	RW													
Reset	1	1	0	0	0	0	0	0	0	0	0	0	0	0	1	1
Bit	15	14	13	12	11	10	9	8	7	6	5	4	3	2	1	0
Name							WDRST_TON9_EN	N9_WDRST_EN					N9SYSRST	SWSYSRST	WDRST	
Type							RW	RW					W1C	W1C	W1C	
Reset							0	0					0	0	0	

Bit(s)	Name	Description
31	WDT2SYSRST_EN	**WDT reset apply to System Reset** Enables watchdog timeout to trigger a system reset. 1: Enable 0: Disable
30	WDT2RSTO_EN	**WDT reset apply to watch dog reset pin out.** 1: Enable 0: Disable
29:16	WDTRSTPD	**Watchdog Reset Output Low Period** Controls the WDT reset output low period. For example: If the pin share mode was set correctly and WDT2RSTO_EN=1, When WDTRSTPD= 0, you can see duration of 1 usec low on the WDT reset output pin. When WDTRSTPD= 3, you can see duration of 4 usec low on the WDT reset output pin. (unit: 1 usec)
9	WDRST_TON9_EN	**MIPS software reset or watch-dog reset apply to N9 subsys.** When this bit is set, MIPS can reset N9 or N9 is reset when MISP watch-dog reset happen. 0: disable 1: Enable
8	N9_WDRST_EN	**N9 watch-dog reset applies to MIPS subsys.** When N9 WDRST happens, N9 will also reset MIPS system. 0: disable 1: Enable
3	N9SYSRST	**N9 watch-dog reset occurred** This bit will be set if N9 wifisys is reset by its watch-dog mechanism. Writing a '1' will clear this bit. Writing a '0' has not effect. NOTE: This register is reset only by a power on reset. 0: Has no effect. 1: Clears this bit.

MEDIATEK CONFIDENTIAL
FOR farrwang@synnex.com.tw USE ONLY

This document contains information that is proprietary to MediaTek Inc.
Unauthorized reproduction or disclosure of this information in whole or in part is strictly prohibited.

Bit(s)	Name	Description
2	SWSYSRST	**Software system reset occurred** This bit will be set if software reset the chip by writing to the RSTSYS bit in RSTCTL. Writing a '1' will clear this bit. Writing a '0' has not effect. NOTE: This register is reset only by a power on reset. 0: Has no effect. 1: Clears this bit.
1	WDRST	**Watchdog reset occurred** This bit will be set if the watchdog timer reset the chip. Writing a '1' will clear this bit. Writing a '0' has not effect. NOTE: This register is reset only by power-on reset. 0: Has no effect. 1: Clears this bit.

1000003C **AGPIO_CFG** **Analog GPIO Configuration** **001F001F**

Bit	31	30	29	28	27	26	25	24	23	22	21	20	19	18	17	16
Name												EPHY_GPIO_AIO_EN				EPHY_P0_DIS
Type												RW				RW
Reset												1	1	1	1	1
Bit	15	14	13	12	11	10	9	8	7	6	5	4	3	2	1	0
Name				RF_OLT_MODE			EINT_SEL	WLED_OD_EN				REF_CLKO_AIO_EN	I2S_CLK_AIO_EN	I2S_WS_AIO_EN	I2S_SDO_AIO_EN	I2S_SDI_AIO_EN
Type				RW			RW	RW				RW	RW	RW	RW	RW
Reset				0			0	0				1	1	1	1	1

Bit(s)	Name	Description
20:17	EPHY_GPIO_AIO_EN	**EPHY P1 ~ P4 digital PAD selection (P1 ~ P4 Disable)** (note: When any bit of bit[20:17] is set to 1, P1 ~ P4 will be swtiched to digital PADs together.) 0: Analog PAD 1: Digital PAD
16	EPHY_P0_DIS	**EPHY P0 Disable** 0: Enable 1: Disable
12	RF_OLT_MODE	**Enable RF OLT mode** 0: DIsable 1: Enable
9	EINT_SEL	**Andes EINT Source** 0: from W_UTIF 1: from GPIO [23:20]
8	WLED_OD_EN	**WLED Open-Drain** 0: DIsable 1: Open-Drain
4	REF_CLKO_AIO_EN	**REF Clock Output PAD Selection** 0: Analog PAD 1: Digital PAD
3	I2S_CLK_AIO_EN	**I2S Clock PAD Selection** 0: Analog PAD

MEDIATEK CONFIDENTIAL
FOR farwang@symtex.com.tw USE ONLY

This document contains information that is proprietary to MediaTek Inc.
Unauthorized reproduction or disclosure of this information in whole or in part is strictly prohibited.

Bit(s)	Name	Description
		1: Digital PAD
2	I2S_WS_AIO_EN	**I2S WS PAD Selection** 0: Analog PAD 1: Digital PAD
1	I2S_SDO_AIO_EN	**I2S CSDO PAD Selection** 0: Analog PAD 1: Digital PAD
0	I2S_SDI_AIO_EN	**I2S SDI PAD Selection** 0: Analog PAD 1: Digital PAD

10000040 **N9_GPIO_INT** **Andes GPIO Interrupt** **00000000**

Bit	31	30	29	28	27	26	25	24	23	22	21	20	19	18	17	16
Name																GPIO_INT[16:16]
Type																W1C
Reset																0
Bit	15	14	13	12	11	10	9	8	7	6	5	4	3	2	1	0
Name	GPIO_INT[15:0]															
Type	W1C															
Reset	0	0	0	0	0	0	0	0	0	0	0	0	0	0	0	0

Bit(s)	Name	Description
16:0	GPIO_INT	**Andes GPIO INT**

10000044 **N9_GPIO_MASK** **Andes GPIO Mask** **0001FFFF**

Bit	31	30	29	28	27	26	25	24	23	22	21	20	19	18	17	16
Name																GPIO_MASK[16:16]
Type																RW
Reset																1
Bit	15	14	13	12	11	10	9	8	7	6	5	4	3	2	1	0
Name	GPIO_MASK[15:0]															
Type	RW															
Reset	1	1	1	1	1	1	1	1	1	1	1	1	1	1	1	1

Bit(s)	Name	Description
16:0	GPIO_MASK	**Andes GPIO MASK**

10000060 **GPIO1_MODE** **GPIO1 purpose selection** **54050404**

MEDIATEK CONFIDENTIAL
FOR farrwang@synnex.com.tw USE ONLY

This document contains information that is proprietary to MediaTek Inc.
Unauthorized reproduction or disclosure of this information in whole or in part is strictly prohibited.

Bit	31	30	29	28	27	26	25	24	23	22	21	20	19	18	17	16
Name	PWM1_MODE		PWM0_MODE		UART2_MODE		UART1_MODE				I2C_MODE			REFCLK_MODE		PERST_MODE
Type	RW		RW		RW		RW				RW			RW		RW
Reset	0	1	0	1	0	1	0	0			0	0		1		1
Bit	15	14	13	12	11	10	9	8	7	6	5	4	3	2	1	0
Name		WDT_MODE		SPI_MODE	SD_MODE		UART0_MODE		I2S_MODE		SPI_CS1_MODE		SPIS_MODE		GPIO_MODE	
Type		RW		RW	RW		RW		RW		RW		RW		RW	
Reset		0		0	0	1	0	0	0	0	0	0	0	1	0	0

Bit(s)	Name	Description
31:30	PWM1_MODE	**PWM1 GPIO mode** 3: SDXC D6 2: UTIF[5] 1: GPIO 0: PWM ch1
29:28	PWM0_MODE	**PWM0 GPIO mode** 3: SDXC D7 2: UTIF[4] 1: GPIO 0: PWM ch0
27:26	UART2_MODE	**UART2 GPIO mode** 3: SDXC D5/D4 2: PWM ch2/ch3 1: GPIO 0: UART-Lite #2
25:24	UART1_MODE	**UART1 GPIO mode** 3: SW_R, SW_T 2: PWM ch0/ch1 1: GPIO 0: UART-Lite #1
21:20	I2C_MODE	**I2C GPIO mode** 2: S-UART (debug) 1: GPIO 0: I2C
18	REFCLK_MODE	**REFCLK GPIO mode** 1: GPIO 0: REFCLK (12M)
16	PERST_MODE	**PCIe RESET GPIO mode** 1: GPIO 0: PCIe reset
14	WDT_MODE	**Watch dog timeout GPIO mode** 1: GPIO 0: Watch dog
12	SPI_MODE	**SPI GPIO mode** 1: GPIO 0: SPI
11:10	SD_MODE	**SDXC GPIO mode** 3: Andes JTAG 2: UTIF[17:10] 1: GPIO 0: SDXC

MEDIATEK CONFIDENTIAL
FOR fariwang@symnex.com.tw USE ONLY

© 2014 MediaTek Inc.

This document contains information that is proprietary to MediaTek Inc.
Unauthorized reproduction or disclosure of this information in whole or in part is strictly prohibited.

Bit(s)	Name	Description
9:8	UART0_MODE	**UART0 GPIO mode** 1: GPIO 0: UART-Lite #0
7:6	I2S_MODE	**I2S GPIO mode** 3: ANTSEL[5:2] 2: PCM 1: GPIO 0: I2S
5:4	SPI_CS1_MODE	**SPI CS1 GPIO mode** 2: REFCLK 1: GPIO 0: SPI CS1
3:2	SPIS_MODE	**SPI Slave GPIO mode** 3: PWM CH0/1 and UART2 2: UTIF[3:0] 1: GPIO 0: SPI Slave
1:0	GPIO_MODE	**GPIO mode** 3: PCIe Reset 2: REFCLK (12M) 1: GPIO 0: GPIO

10000064 **GPIO2_MODE** **GPIO2 purpose selection** **05550555**

Bit	31	30	29	28	27	26	25	24	23	22	21	20	19	18	17	16
Name					P4_LED_KN_MODE		P3_LED_KN_MODE		P2_LED_KN_MODE		P1_LED_KN_MODE		P0_LED_KN_MODE		WLED_KN_MODE	
Type					RW		RW		RW		RW		RW		RW	
Reset					0	1	0	1	0	1	0	1	0	1	0	1
Bit	15	14	13	12	11	10	9	8	7	6	5	4	3	2	1	0
Name					P4_LED_AN_MODE		P3_LED_AN_MODE		P2_LED_AN_MODE		P1_LED_AN_MODE		P0_LED_AN_MODE		WLED_AN_MODE	
Type					RW		RW		RW		RW		RW		RW	
Reset					0	1	0	1	0	1	0	1	0	1	0	1

Bit(s)	Name	Description
27:26	P4_LED_KN_MODE	**EPHY P4 LED GPIO mode** [Note] Only valid for MT7628KN. 3: JTAG (JTRST_N) 2: UTIF[6] 1: GPIO 0: EPHY P4 LED
25:24	P3_LED_KN_MODE	**EPHY P3 LED GPIO mode** [Note] Only valid for MT7628KN. 3: JTAG (JTCLK) 2: UTIF[7] 1: GPIO 0: EPHY P3 LED
23:22	P2_LED_KN_MODE	**EPHY P2 LED GPIO mode** [Note] Only valid for MT7628KN. 3: JTAG (JTMS) 2: UTIF[8] 1: GPIO 0: EPHY P2 LED

MEDIATEK CONFIDENTIAL
FOR farrwang@sunnex.com.tw USE ONLY

This document contains information that is proprietary to MediaTek Inc.
Unauthorized reproduction or disclosure of this information in whole or in part is strictly prohibited.

Bit(s)	Name	Description
21:20	P1_LED_KN_MODE	**EPHY P1 LED GPIO mode** [Note] Only valid for MT7628KN. 3: JTAG (JTDI) 2: UTIF[9] 1: GPIO 0: EPHY P1 LED
19:18	P0_LED_KN_MODE	**EPHY P0 LED GPIO mode** [Note] Only valid for MT7628KN. 3: JTAG(JTDO) 2: Reserved 1: GPIO 0: EPHY P0 LED
17:16	WLED_KN_MODE	**WLED GPIO mode** [Note] Only valid for MT7628KN. 3: Reserved 2: Reserved 1: GPIO 0: WLED
11:10	P4_LED_AN_MODE	**EPHY P4 LED GPIO mode** [Note] Only valid for MT7628AN. 3: JTAG (JTRST_N) 2: UTIF[6] 1: GPIO 0: EPHY P4 LED
9:8	P3_LED_AN_MODE	**EPHY P3 LED GPIO mode** [Note] Only valid for MT7628AN. 3: JTAG (JTCLK) 2: UTIF[7] 1: GPIO 0: EPHY P3 LED
7:6	P2_LED_AN_MODE	**EPHY P2 LED GPIO mode** [Note] Only valid for MT7628AN. 3: JTAG (JTMS) 2: UTIF[8] 1: GPIO 0: EPHY P2 LED
5:4	P1_LED_AN_MODE	**EPHY P1 LED GPIO mode** [Note] Only valid for MT7628AN. 3: JTAG (JTDI) 2: UTIF[9] 1: GPIO 0: EPHY P1 LED
3:2	P0_LED_AN_MODE	**EPHY P0 LED GPIO mode** [Note] Only valid for MT7628AN. 3: JTAG(JTDO) 2: Reserved 1: GPIO 0: EPHY P0 LED
1:0	WLED_AN_MODE	**WLED GPIO mode** [Note] Only valid for MT7628AN. 3: Reserved 2: Reserved 1: GPIO 0: WLED

MEDIATEK CONFIDENTIAL
FOR farrwang@synnex.com.tw USE ONLY

This document contains information that is proprietary to MediaTek Inc.
Unauthorized reproduction or disclosure of this information in whole or in part is strictly prohibited.

10000068 **MEMO1** **Memory1** **00000000**

Bit	31	30	29	28	27	26	25	24	23	22	21	20	19	18	17	16
Name	MEMO1[31:16]															
Type	RW															
Reset	0	0	0	0	0	0	0	0	0	0	0	0	0	0	0	0
Bit	15	14	13	12	11	10	9	8	7	6	5	4	3	2	1	0
Name	MEMO1[15:0]															
Type	RW															
Reset	0	0	0	0	0	0	0	0	0	0	0	0	0	0	0	0

Bit(s)	Name	Description
31:0	MEMO1	**Memory1**

1000006C **MEMO2** **Memory2** **00000000**

Bit	31	30	29	28	27	26	25	24	23	22	21	20	19	18	17	16
Name	MEMO2[31:16]															
Type	RW															
Reset	0	0	0	0	0	0	0	0	0	0	0	0	0	0	0	0
Bit	15	14	13	12	11	10	9	8	7	6	5	4	3	2	1	0
Name	MEMO2[15:0]															
Type	RW															
Reset	0	0	0	0	0	0	0	0	0	0	0	0	0	0	0	0

Bit(s)	Name	Description
31:0	MEMO2	**Memory2**

10000070 **EXT_MEMO1** **Extend Application #1** **00000000**

Bit	31	30	29	28	27	26	25	24	23	22	21	20	19	18	17	16
Name	MEMO1[31:16]															
Type	RW															
Reset	0	0	0	0	0	0	0	0	0	0	0	0	0	0	0	0
Bit	15	14	13	12	11	10	9	8	7	6	5	4	3	2	1	0
Name	MEMO1[15:0]															
Type	RW															
Reset	0	0	0	0	0	0	0	0	0	0	0	0	0	0	0	0

Bit(s)	Name	Description
31:0	MEMO1	**Extend Application #1**

10000074 **EXT_MEMO2** **Extend Application #2** **00000000**

Bit	31	30	29	28	27	26	25	24	23	22	21	20	19	18	17	16
Name	MEMO2[31:16]															
Type	RW															
Reset	0	0	0	0	0	0	0	0	0	0	0	0	0	0	0	0
Bit	15	14	13	12	11	10	9	8	7	6	5	4	3	2	1	0
Name	MEMO2[15:0]															
Type	RW															

MEDIATEK CONFIDENTIAL
FOR fairwang@synnex.com.tw USE ONLY

This document contains information that is proprietary to MediaTek Inc.
Unauthorized reproduction or disclosure of this information in whole or in part is strictly prohibited.

Reset	0	0	0	0	0	0	0	0	0	0	0	0	0	0	0	0

Bit(s)	Name	Description
31:0	MEMO2	**Extend Application #2**

10000078 **EXT_MEMO3** **Extend Application #3** **00000000**

Bit	31	30	29	28	27	26	25	24	23	22	21	20	19	18	17	16
Name	MEMO3[31:16]															
Type	RW															
Reset	0	0	0	0	0	0	0	0	0	0	0	0	0	0	0	0
Bit	15	14	13	12	11	10	9	8	7	6	5	4	3	2	1	0
Name	MEMO3[15:0]															
Type	RW															
Reset	0	0	0	0	0	0	0	0	0	0	0	0	0	0	0	0

Bit(s)	Name	Description
31:0	MEMO3	**Extend Application #3**

1000007C **EXT_MEMO4** **Extend Application #4** **00000000**

Bit	31	30	29	28	27	26	25	24	23	22	21	20	19	18	17	16
Name	MEMO4[31:16]															
Type	RW															
Reset	0	0	0	0	0	0	0	0	0	0	0	0	0	0	0	0
Bit	15	14	13	12	11	10	9	8	7	6	5	4	3	2	1	0
Name	MEMO4[15:0]															
Type	RW															
Reset	0	0	0	0	0	0	0	0	0	0	0	0	0	0	0	0

Bit(s)	Name	Description
31:0	MEMO4	**Extend Application #4**

MEDIATEK CONFIDENTIAL
FOR farrwang@synnex.com.tw USE ONLY

This document contains information that is proprietary to MediaTek Inc.
Unauthorized reproduction or disclosure of this information in whole or in part is strictly prohibited.

2.3 Timer

2.3.1 Features

- Independent 1usec tick pre-scale for each timer.
- Independent interrupts for each timer.
- Two general-purpose timers and a watchdog timer. Watchdog timer resets system on time-out.
- Timer Modes
  - *Periodic*
    In periodic mode, the timer counts down to zero from the limited value. An interrupt is generated when the count is zero. After reaching zero, the limited value is reloaded into the timer and the timer counts down again. A limited value of zero disables the timer.
  - *Timeout*
    In timeout mode, the timer counts down to zero from the limited value. An interrupt is generated when the count is zero. In this mode, the ENABLE bit is reset when the timer reaches zero, stopping the counter.
  - *Watchdog*
    In watchdog mode, the timer counts down to zero from the limited value. If the load value is not reloaded or the timer is not disabled before the count is zero, the chip will be reset. When this occurs, every register in the chip is reset except the watchdog reset status bit WDRST in the RSTSTAT register in the system control block; it remains set to alert firmware of the timeout event when it re-executes its bootstrap.

2.3.2 Block Diagram

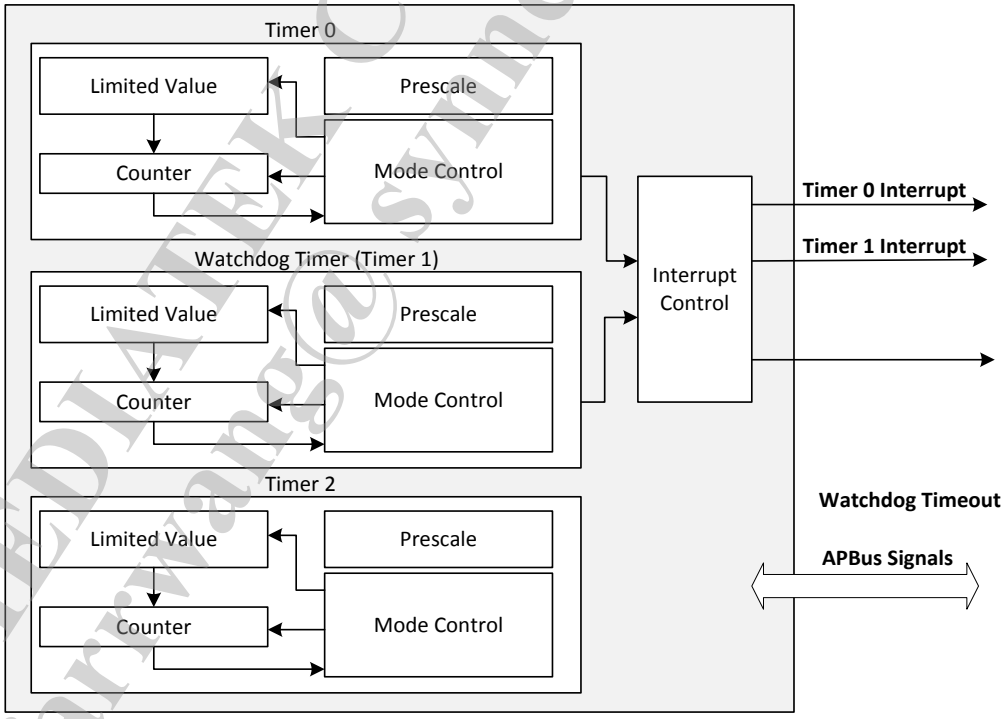

Figure 2-2 Timer Block Diagram

MEDIATEK CONFIDENTIAL
FOR farwang@symnex.com.tw USE ONLY

This document contains information that is proprietary to MediaTek Inc.
Unauthorized reproduction or disclosure of this information in whole or in part is strictly prohibited.

2.3.3 Registers

TIMER Changes LOG

Revision	Date	Author	Change Log
0.1	2012/8/24	Leon Chung	Initialization
0.2	2013/12/10	Rick Ho	1. Modify T0CTL_REG Bit[4] to WO and add Bit[3] RO 2. Modify WDTCTL_REG Bit[4] to WO and add Bit[3] RO 3. Modify T1CTL_REG Bit[4] to WO and add Bit[3] RO

Module name: TIMER Base address: (+10000100h)

Address	Name	Width	Register Function
10000100	TGLB_REG	32	RISC Global Control Register
10000110	T0CTL_REG	32	RISC Timer 0 Control Register
10000114	T0LMT_REG	32	RISC Timer 0 Limit Register
10000118	T0_REG	32	RISC Timer 0 Register
10000120	WDTCTL_REG	32	Watch Dog Timer Control Register
10000124	WDTLMT_REG	32	Watch Dog Timer Limit Register
10000128	WDT_REG	32	Watch Dog Timer Register
10000130	T1CTL_REG	32	RISC Timer 1 Control Register
10000134	T1LMT_REG	32	RISC Timer 1 Limit Register
10000138	T1_REG	32	RISC Timer 1 Register

10000100 TGLB_REG RISC Global Control Register 00000000

Bit	31	30	29	28	27	26	25	24	23	22	21	20	19	18	17	16
Name	RESV1[20:5]															
Type	RO															
Reset	0	0	0	0	0	0	0	0	0	0	0	0	0	0	0	0
Bit	15	14	13	12	11	10	9	8	7	6	5	4	3	2	1	0
Name	RESV1[4:0]					T1RST	WDTRST	T0RST	RESV0					T1INT	WDTINT	T0INT
Type	RO					W1C	W1C	W1C	RO					W1C	W1C	W1C
Reset	0	0	0	0	0	0	0	0	0	0	0	0	0	0	0	0

Bit(s)	Name	Description
31:11	RESV1	**Reserved**
10	T1RST	**Timer 1 reset** 1: to reset timer 1 to T1LMT value
9	WDTRST	**Watch dog timer reset** 1: to reset watch dog timer to WDTLMT value
8	T0RST	**Timer 0 reset** 1: to reset timer 0 to T0LMT value
7:3	RESV0	**Reserved**
2	T1INT	**Timer 1 interrupt status**
1	WDTINT	**Watch dog timer interrupt status**

MEDIATEK CONFIDENTIAL
FOR farrwang@synnex.com.tw USE ONLY

This document contains information that is proprietary to MediaTek Inc.
Unauthorized reproduction or disclosure of this information in whole or in part is strictly prohibited.

Bit(s)	Name	Description
0	T0INT	**Timer 0 interrupt status**

10000110 **T0CTL_REG** **RISC Timer 0 Control Register** **00000000**

Bit	31	30	29	28	27	26	25	24	23	22	21	20	19	18	17	16
Name	T0PRES															
Type	RW															
Reset	0	0	0	0	0	0	0	0	0	0	0	0	0	0	0	0
Bit	15	14	13	12	11	10	9	8	7	6	5	4	3	2	1	0
Name	RESV2								T0EN	RESV1		T0AL	T0AL_STATUS	RESV0		
Type	RO								RW	RO		WO	RO	RO		
Reset	0	0	0	0	0	0	0	0	0	0	0	0	0	0	0	0

Bit(s)	Name	Description
31:16	T0PRES	**Timer 0 count down tick pre-scale. Unit is 1u second.**
15:8	RESV2	**Reserved**
7	T0EN	**Timer 0 count down enable**
6:5	RESV1	**Reserved**
4	T0AL	**Timer 0 auto load enable** 1: Enable 0: Disable
3	T0AL_STATUS	**Timer 0 auto load enable status** 1: Enable 0: Disable
2:0	RESV0	**Reserved**

10000114 **T0LMT_REG** **RISC Timer 0 Limit Register** **00000000**

Bit	31	30	29	28	27	26	25	24	23	22	21	20	19	18	17	16
Name	RESV0															
Type	RO															
Reset	0	0	0	0	0	0	0	0	0	0	0	0	0	0	0	0
Bit	15	14	13	12	11	10	9	8	7	6	5	4	3	2	1	0
Name	T0LMT															
Type	RW															
Reset	0	0	0	0	0	0	0	0	0	0	0	0	0	0	0	0

Bit(s)	Name	Description
31:16	RESV0	**Reserved**
15:0	T0LMT	**Timer 0 Limit.** When T0AL is set to 1, T0LMT will be loaded into timer 0 when timer 0 is enabled or when count down to 0.

10000118 **T0_REG** **RISC Timer 0 Register** **0000FFFF**

MEDIATEK CONFIDENTIAL
FOR farrwang@symnex.com.tw USE ONLY

This document contains information that is proprietary to MediaTek Inc.
Unauthorized reproduction or disclosure of this information in whole or in part is strictly prohibited.

Bit	31	30	29	28	27	26	25	24	23	22	21	20	19	18	17	16
Name	RESV0															
Type	RO															
Reset	0	0	0	0	0	0	0	0	0	0	0	0	0	0	0	0
Bit	15	14	13	12	11	10	9	8	7	6	5	4	3	2	1	0
Name	T0															
Type	RW															
Reset	1	1	1	1	1	1	1	1	1	1	1	1	1	1	1	1

Bit(s)	Name	Description
31:16	RESV0	**Reserved**
15:0	T0	**RISC down-count timer 0**

10000120 WDTCTL_REG Watch Dog Timer Control Register 00000000

Bit	31	30	29	28	27	26	25	24	23	22	21	20	19	18	17	16
Name	WDTPRES															
Type	RW															
Reset	0	0	0	0	0	0	0	0	0	0	0	0	0	0	0	0
Bit	15	14	13	12	11	10	9	8	7	6	5	4	3	2	1	0
Name	RESV2								WDTEN	RESV1		WDTAL	WDTAL_STATUS	RESV0		
Type	RO								RW	RO		WO	RO	RO		
Reset	0	0	0	0	0	0	0	0	0	0	0	0	0	0	0	0

Bit(s)	Name	Description
31:16	WDTPRES	**Watch dog timer count down tick pre-scale. Unit is 1u second.**
15:8	RESV2	**Reserved**
7	WDTEN	**Watch dog timer count down enable**
6:5	RESV1	**Reserved**
4	WDTAL	**Watch dog timer auto load enable** 1: Enable 0: Disable
3	WDTAL_STATUS	**Watch dog timer auto load enable status** 1: Enable 0: Disable
2:0	RESV0	**Reserved**

10000124 WDTLMT_REG Watch Dog Timer Limit Register 00000000

Bit	31	30	29	28	27	26	25	24	23	22	21	20	19	18	17	16
Name	RESV0															
Type	RO															
Reset	0	0	0	0	0	0	0	0	0	0	0	0	0	0	0	0
Bit	15	14	13	12	11	10	9	8	7	6	5	4	3	2	1	0
Name	WDTLMT															
Type	RW															
Reset	0	0	0	0	0	0	0	0	0	0	0	0	0	0	0	0

Bit(s)	Name	Description

FOR MEDIATEK CONFIDENTIAL
fairwang@synnex.com.tw USE ONLY

This document contains information that is proprietary to MediaTek Inc.
Unauthorized reproduction or disclosure of this information in whole or in part is strictly prohibited.

Bit(s)	Name	Description
31:16	RESV0	**Reserved**
15:0	WDTLMT	**Watch dog timer Limit.** When WDTAL is set to 1, WDTLMT will be loaded into watch dog timer when watch dog timer is enabled or when count down to 0.

10000128 **WDT_REG** **Watch Dog Timer Register** **0000FFFF**

Bit	31	30	29	28	27	26	25	24	23	22	21	20	19	18	17	16
Name	RESV0															
Type	RO															
Reset	0	0	0	0	0	0	0	0	0	0	0	0	0	0	0	0
Bit	15	14	13	12	11	10	9	8	7	6	5	4	3	2	1	0
Name	WDT															
Type	RW															
Reset	1	1	1	1	1	1	1	1	1	1	1	1	1	1	1	1

Bit(s)	Name	Description
31:16	RESV0	**Reserved**
15:0	WDT	**watch dog timer.**

10000130 **T1CTL_REG** **RISC Timer 1 Control Register** **00000000**

Bit	31	30	29	28	27	26	25	24	23	22	21	20	19	18	17	16
Name	T1PRES															
Type	RW															
Reset	0	0	0	0	0	0	0	0	0	0	0	0	0	0	0	0
Bit	15	14	13	12	11	10	9	8	7	6	5	4	3	2	1	0
Name	RESV2								T1EN	RESV1		T1AL	T1AL_STATUS	RESV0		
Type	RO								RW	RO		WO	RO	RO		
Reset	0	0	0	0	0	0	0	0	0	0	0	0	0	0	0	0

Bit(s)	Name	Description
31:16	T1PRES	**Timer 1 count down tick pre-scale. Unit is 1u second.**
15:8	RESV2	**Reserved**
7	T1EN	**Timer 1 count down enable**
6:5	RESV1	**Reserved**
4	T1AL	**Timer 1 auto load enable** 1: Enable 0: Disable
3	T1AL_STATUS	**Timer 1 auto load enable status** 1: Enable 0: Disable
2:0	RESV0	**Reserved**

10000134 **T1LMT_REG** **RISC Timer 1 Limit Register** **0000000**

MEDIATEK CONFIDENTIAL
FOR fartwang@symtex.com.tw USE ONLY

This document contains information that is proprietary to MediaTek Inc.
Unauthorized reproduction or disclosure of this information in whole or in part is strictly prohibited.

0

Bit	31	30	29	28	27	26	25	24	23	22	21	20	19	18	17	16
Name	RESV0															
Type	RO															
Reset	0	0	0	0	0	0	0	0	0	0	0	0	0	0	0	0
Bit	15	14	13	12	11	10	9	8	7	6	5	4	3	2	1	0
Name	T1LMT															
Type	RW															
Reset	0	0	0	0	0	0	0	0	0	0	0	0	0	0	0	0

Bit(s)	Name	Description
31:16	RESV0	**Reserved**
15:0	T1LMT	**Timer 1 Limit.** When T1AL is set to 1, T1LMT will be loaded into timer 1 when timer 1 is enabled or when count down to 0.

10000138 **T1_REG** **RISC Timer 1 Register** **0000FFFF**

Bit	31	30	29	28	27	26	25	24	23	22	21	20	19	18	17	16
Name	RESV0															
Type	RO															
Reset	0	0	0	0	0	0	0	0	0	0	0	0	0	0	0	0
Bit	15	14	13	12	11	10	9	8	7	6	5	4	3	2	1	0
Name	T1															
Type	RW															
Reset	1	1	1	1	1	1	1	1	1	1	1	1	1	1	1	1

Bit(s)	Name	Description
31:16	RESV0	**Reserved**
15:0	T1	**RISC down-count timer 1**

MEDIATEK CONFIDENTIAL
FOR farrwang@synnex.com.tw USE ONLY

This document contains information that is proprietary to MediaTek Inc.
Unauthorized reproduction or disclosure of this information in whole or in part is strictly prohibited.

2.4 Interrupt Controller

2.4.1 Registers

CIRQ Changes LOG

Revision	Date	Author	Change Log
0.1	2012/6/15	YuShu Xiao	Initialization

Module name: CIRQ Base address: (+10000200h)

Address	Name	Width	Register Function
10000200	IRQ_SEL0	32	**IRQ Selection 0 Register** The registers allow the interrupt sources to be mapped onto interrupt requests IRQ. When write data to this register, the FIQ_SEL register will be update to the inverse data at the same time.
10000204	IRQ_SEL1	32	**Reserved** Reserved
10000208	IRQ_SEL2	32	**Reserved** Reserved
1000020C	IRQ_SEL3	32	**Reserved** Reserved
1000026C	FIQ_SEL	32	**FIQ Selection Register** The registers allow the interrupt sources to be mapped onto interrupt requests FIQ. When write data to this register, the IRQ_SEL0 register will be update to the inverse data at the same time.
10000270	IRQ_MASK	32	**IRQ Mask Register** This register contains a mask bit for each interrupt line in IRQ Controller.
10000274	FIQ_MASK	32	**FIQ Mask Register** This register contains a mask bit for each interrupt line in FIQ Controller
10000278	IRQ_MASK_CLR	32	**IRQ Mask Clear Register** This register is used to clear bits in IRQ Mask Register.
1000027C	FIQ_MASK_CLR	32	**FIQ Mask Clear Register** This register is used to clear bits in FIQ Mask Register.
10000280	IRQ_MASK_SET	32	**IRQ Mask Set Register** This register is used to set bits in the IRQ Mask Register.
10000284	FIQ_MASK_SET	32	**FIQ Mask Set Register** This register is used to set bits in the FIQ Mask Register.
10000288	IRQ_EOI	32	**IRQ End of Interrupt Register** This register provides a mean for software to relinquish and to refresh the interrupt controller. Writing a 1 to a specific bit results in an IRQ End of Interrupt command issued internally to the corresponding interrupt line.
1000028C	FIQ_EOI	32	**FIQ End of Interrupt Register** This register provides a mean for software to relinquish and to refresh the interrupt controller. Writing a 1 to a specific bit results in an FIQ End of Interrupt command issued internally to the corresponding interrupt line.
10000290	IRQ_SENS	32	**IRQ Sensitive Register** This register is used to set the IRQ interrupts as either edge or

MEDIATEK CONFIDENTIAL
FOR farrwang@sitera.com.tw USE ONLY

This document contains information that is proprietary to MediaTek Inc.
Unauthorized reproduction or disclosure of this information in whole or in part is strictly prohibited.

			level sensitive.
10000294	**FIQ_SENS**	32	**FIQ Sensitive Register** This register is used to set the FIQ interrupts as either edge or level sensitive.
10000298	**INT_SOFT**	32	**Software Interrupt Register** Setting 1 to the specific bit position generates a software interrupt for corresponding interrupt line before interrupt input multiplex. This register is used for debug purpose.
1000029C	**IRQ_STAT**	32	**IRQ Status Register** Reading this register will get the IRQ interrupt sources with masking.
100002A0	**FIQ_STAT**	32	**FIQ Status Register** Reading this register will get the FIQ interrupt sources with masking.
100002A4	**INT_PURE**	32	**Interrupt Pure Register** Reading this register will get the pure interrupt sources without masking.
100002A8	**INT_MSEL**	32	**Interrupt Mode Selection Register** This register is used to select the interrupt modes of MIPS1004Kc.

10000200 IRQ_SEL0 IRQ Selection 0 Register 00000001

Bit	31	30	29	28	27	26	25	24	23	22	21	20	19	18	17	16
Name	IRQ0[31:16]															
Type	RW															
Reset	0	0	0	0	0	0	0	0	0	0	0	0	0	0	0	0
Bit	15	14	13	12	11	10	9	8	7	6	5	4	3	2	1	0
Name	IRQ0[15:0]															
Type	RW															
Reset	0	0	0	0	0	0	0	0	0	0	0	0	0	0	0	1

Bit(s)	Name	Description
31:0	IRQ0	**IRQ Selection 0** 0: Clear IRQ_SEL0 and Set FIQ_SEL 1: Set IRQ_SEL0 and Clear FIQ_SEL

10000204 IRQ_SEL1 Reserved 00000000

Bit	31	30	29	28	27	26	25	24	23	22	21	20	19	18	17	16
Name	RESV[31:16]															
Type	RW															
Reset	0	0	0	0	0	0	0	0	0	0	0	0	0	0	0	0
Bit	15	14	13	12	11	10	9	8	7	6	5	4	3	2	1	0
Name	RESV[15:0]															
Type	RW															
Reset	0	0	0	0	0	0	0	0	0	0	0	0	0	0	0	0

Bit(s)	Name	Description
31:0	RESV	**Reserved**

MEDIATEK CONFIDENTIAL
FOR fairwang@symnet.com.tw USE ONLY

This document contains information that is proprietary to MediaTek Inc.
Unauthorized reproduction or disclosure of this information in whole or in part is strictly prohibited.

10000208 IRQ_SEL2 Reserved 00000000

Bit	31	30	29	28	27	26	25	24	23	22	21	20	19	18	17	16
Name	RESV[31:16]															
Type	RW															
Reset	0	0	0	0	0	0	0	0	0	0	0	0	0	0	0	0
Bit	15	14	13	12	11	10	9	8	7	6	5	4	3	2	1	0
Name	RESV[15:0]															
Type	RW															
Reset	0	0	0	0	0	0	0	0	0	0	0	0	0	0	0	0

Bit(s)	Name	Description
31:0	RESV	**Reserved**

1000020C IRQ_SEL3 Reserved 00000000

Bit	31	30	29	28	27	26	25	24	23	22	21	20	19	18	17	16
Name	RESV[31:16]															
Type	RW															
Reset	0	0	0	0	0	0	0	0	0	0	0	0	0	0	0	0
Bit	15	14	13	12	11	10	9	8	7	6	5	4	3	2	1	0
Name	RESV[15:0]															
Type	RW															
Reset	0	0	0	0	0	0	0	0	0	0	0	0	0	0	0	0

Bit(s)	Name	Description
31:0	RESV	**Reserved**

1000026C FIQ_SEL FIQ Selection Register 00000000

Bit	31	30	29	28	27	26	25	24	23	22	21	20	19	18	17	16
Name	FIQ[31:16]															
Type	RW															
Reset	0	0	0	0	0	0	0	0	0	0	0	0	0	0	0	0
Bit	15	14	13	12	11	10	9	8	7	6	5	4	3	2	1	0
Name	FIQ[15:0]															
Type	RW															
Reset	0	0	0	0	0	0	0	0	0	0	0	0	0	0	0	0

Bit(s)	Name	Description
31:0	FIQ	**FIQ Selection** 0: Clear FIQ_SEL and Set IRQ_SEL0 1: Set FIQ_SEL and Clear IRQ_SEL0

10000270 IRQ_MASK IRQ Mask Register 00000000

Bit	31	30	29	28	27	26	25	24	23	22	21	20	19	18	17	16
Name	IRQ0[31:16]															
Type	RW															
Reset	0	0	0	0	0	0	0	0	0	0	0	0	0	0	0	0
Bit	15	14	13	12	11	10	9	8	7	6	5	4	3	2	1	0

MEDIATEK CONFIDENTIAL
FOR farrwang@synnex.com.tw USE ONLY

This document contains information that is proprietary to MediaTek Inc.
Unauthorized reproduction or disclosure of this information in whole or in part is strictly prohibited.

Name	IRQ0[15:0]															
Type	RW															
Reset	0	0	0	0	0	0	0	0	0	0	0	0	0	0	0	0

Bit(s)	Name	Description
31:0	IRQ0	**IRQ Mask** 0: Interrupt is disabled 1: Interrupt is enabled

10000274 FIQ_MASK FIQ Mask Register 00000000

Bit	31	30	29	28	27	26	25	24	23	22	21	20	19	18	17	16
Name	FIQ[31:16]															
Type	RW															
Reset	0	0	0	0	0	0	0	0	0	0	0	0	0	0	0	0
Bit	15	14	13	12	11	10	9	8	7	6	5	4	3	2	1	0
Name	FIQ[15:0]															
Type	RW															
Reset	0	0	0	0	0	0	0	0	0	0	0	0	0	0	0	0

Bit(s)	Name	Description
31:0	FIQ	**FIQ Mask** 0: Interrupt is disabled 1: Interrupt is enabled

10000278 IRQ_MASK_CLR IRQ Mask Clear Register 00000000

Bit	31	30	29	28	27	26	25	24	23	22	21	20	19	18	17	16
Name	IRQ0[31:16]															
Type	WO															
Reset	0	0	0	0	0	0	0	0	0	0	0	0	0	0	0	0
Bit	15	14	13	12	11	10	9	8	7	6	5	4	3	2	1	0
Name	IRQ0[15:0]															
Type	WO															
Reset	0	0	0	0	0	0	0	0	0	0	0	0	0	0	0	0

Bit(s)	Name	Description
31:0	IRQ0	**IRQ Mask Clear** 0: No effect 1: Clear the corresponding MASK bit

1000027C FIQ_MASK_CLR FIQ Mask Clear Register 00000000

Bit	31	30	29	28	27	26	25	24	23	22	21	20	19	18	17	16
Name	FIQ[31:16]															
Type	WO															
Reset	0	0	0	0	0	0	0	0	0	0	0	0	0	0	0	0
Bit	15	14	13	12	11	10	9	8	7	6	5	4	3	2	1	0
Name	FIQ[15:0]															
Type	WO															
Reset	0	0	0	0	0	0	0	0	0	0	0	0	0	0	0	0

MEDIATEK CONFIDENTIAL
FOR tarrwang@synnex.com.tw USE ONLY

This document contains information that is proprietary to MediaTek Inc.
Unauthorized reproduction or disclosure of this information in whole or in part is strictly prohibited.

Bit(s)	Name	Description
31:0	FIQ	**FIQ Mask Clear** 0: No effect 1: Clear the corresponding MASK bit

10000280 **IRQ_MASK_SET** **IRQ Mask Set Register** **00000000**

Bit	31	30	29	28	27	26	25	24	23	22	21	20	19	18	17	16
Name	IRQ0[31:16]															
Type	WO															
Reset	0	0	0	0	0	0	0	0	0	0	0	0	0	0	0	0
Bit	15	14	13	12	11	10	9	8	7	6	5	4	3	2	1	0
Name	IRQ0[15:0]															
Type	WO															
Reset	0	0	0	0	0	0	0	0	0	0	0	0	0	0	0	0

Bit(s)	Name	Description
31:0	IRQ0	**IRQ Mask Set** 0: No effect 1: Set the corresponding MASK bit

10000284 **FIQ_MASK_SET** **FIQ Mask Set Register** **00000000**

Bit	31	30	29	28	27	26	25	24	23	22	21	20	19	18	17	16
Name	FIQ[31:16]															
Type	WO															
Reset	0	0	0	0	0	0	0	0	0	0	0	0	0	0	0	0
Bit	15	14	13	12	11	10	9	8	7	6	5	4	3	2	1	0
Name	FIQ[15:0]															
Type	WO															
Reset	0	0	0	0	0	0	0	0	0	0	0	0	0	0	0	0

Bit(s)	Name	Description
31:0	FIQ	**FIQ Mask Set** 0: No effect 1: Set the corresponding MASK bit

10000288 **IRQ_EOI** **IRQ End of Interrupt Register** **00000000**

Bit	31	30	29	28	27	26	25	24	23	22	21	20	19	18	17	16
Name	IRQ0[31:16]															
Type	W1C															
Reset	0	0	0	0	0	0	0	0	0	0	0	0	0	0	0	0
Bit	15	14	13	12	11	10	9	8	7	6	5	4	3	2	1	0
Name	IRQ0[15:0]															
Type	W1C															
Reset	0	0	0	0	0	0	0	0	0	0	0	0	0	0	0	0

Bit(s)	Name	Description
31:0	IRQ0	**IRQ End of Interrupt** 0: No service is currently in progress or pending

MEDIATEK CONFIDENTIAL
FOR fariwang@synnex.com.tw USE ONLY

This document contains information that is proprietary to MediaTek Inc.
Unauthorized reproduction or disclosure of this information in whole or in part is strictly prohibited.

Bit(s)	Name	Description
		1: Interrupt request is in-service

1000028C FIQ_EOI FIQ End of Interrupt Register 00000000

Bit	31	30	29	28	27	26	25	24	23	22	21	20	19	18	17	16
Name	FIQ[31:16]															
Type	W1C															
Reset	0	0	0	0	0	0	0	0	0	0	0	0	0	0	0	0
Bit	15	14	13	12	11	10	9	8	7	6	5	4	3	2	1	0
Name	FIQ[15:0]															
Type	W1C															
Reset	0	0	0	0	0	0	0	0	0	0	0	0	0	0	0	0

Bit(s)	Name	Description
31:0	FIQ	**FIQ End of Interrupt** 0: No service is currently in progress or pending 1: Interrupt request is in-service

10000290 IRQ_SENS IRQ Sensitive Register 00000001

Bit	31	30	29	28	27	26	25	24	23	22	21	20	19	18	17	16
Name	IRQ0[31:16]															
Type	RW															
Reset	0	0	0	0	0	0	0	0	0	0	0	0	0	0	0	0
Bit	15	14	13	12	11	10	9	8	7	6	5	4	3	2	1	0
Name	IRQ0[15:0]															
Type	RW															
Reset	0	0	0	0	0	0	0	0	0	0	0	0	0	0	0	1

Bit(s)	Name	Description
31:0	IRQ0	**IRQ Sensitive** 0: Edge sensitivity with Pos-edge Edge 1: Level sensitivity with active High

10000294 FIQ_SENS FIQ Sensitive Register 00000001

Bit	31	30	29	28	27	26	25	24	23	22	21	20	19	18	17	16
Name	FIQ[31:16]															
Type	RW															
Reset	0	0	0	0	0	0	0	0	0	0	0	0	0	0	0	0
Bit	15	14	13	12	11	10	9	8	7	6	5	4	3	2	1	0
Name	FIQ[15:0]															
Type	RW															
Reset	0	0	0	0	0	0	0	0	0	0	0	0	0	0	0	1

Bit(s)	Name	Description
31:0	FIQ	**FIQ Sensitive** 0: Edge sensitivity with Pos-edge Edge 1: Level sensitivity with active High

MEDIATEK CONFIDENTIAL
FOR farrwang@synnex.com.tw USE ONLY

This document contains information that is proprietary to MediaTek Inc.
Unauthorized reproduction or disclosure of this information in whole or in part is strictly prohibited.

10000298 INT_SOFT Software Interrupt Register 00000000

Bit	31	30	29	28	27	26	25	24	23	22	21	20	19	18	17	16
Name	INT[31:16]															
Type	RW															
Reset	0	0	0	0	0	0	0	0	0	0	0	0	0	0	0	0
Bit	15	14	13	12	11	10	9	8	7	6	5	4	3	2	1	0
Name	INT[15:0]															
Type	RW															
Reset	0	0	0	0	0	0	0	0	0	0	0	0	0	0	0	0

Bit(s)	Name	Description
31:0	INT	**Software Interrupt**

1000029C IRQ_STAT IRQ Status Register 00000000

Bit	31	30	29	28	27	26	25	24	23	22	21	20	19	18	17	16
Name	IRQ0[31:16]															
Type	RO															
Reset	0	0	0	0	0	0	0	0	0	0	0	0	0	0	0	0
Bit	15	14	13	12	11	10	9	8	7	6	5	4	3	2	1	0
Name	IRQ0[15:0]															
Type	RO															
Reset	0	0	0	0	0	0	0	0	0	0	0	0	0	0	0	0

Bit(s)	Name	Description
31:0	IRQ0	**IRQ Status** 0: No interrupt request is generated 1: Interrupt request is pending

100002A0 FIQ_STAT FIQ Status Register 00000000

Bit	31	30	29	28	27	26	25	24	23	22	21	20	19	18	17	16
Name	FIQ[31:16]															
Type	RO															
Reset	0	0	0	0	0	0	0	0	0	0	0	0	0	0	0	0
Bit	15	14	13	12	11	10	9	8	7	6	5	4	3	2	1	0
Name	FIQ[15:0]															
Type	RO															
Reset	0	0	0	0	0	0	0	0	0	0	0	0	0	0	0	0

Bit(s)	Name	Description
31:0	FIQ	**FIQ Status** 0: No interrupt request is generated 1: Interrupt request is pending

100002A4 INT_PURE Interrupt Pure Register 00000000

Bit	31	30	29	28	27	26	25	24	23	22	21	20	19	18	17	16

MEDIATEK CONFIDENTIAL
FOR farrwang@synnex.com.tw USE ONLY

This document contains information that is proprietary to MediaTek Inc.
Unauthorized reproduction or disclosure of this information in whole or in part is strictly prohibited.

Name	INT[31:16]															
Type	RO															
Reset	0	0	0	0	0	0	0	0	0	0	0	0	0	0	0	0
Bit	15	14	13	12	11	10	9	8	7	6	5	4	3	2	1	0
Name	INT[15:0]															
Type	RO															
Reset	0	0	0	0	0	0	0	0	0	0	0	0	0	0	0	0

Bit(s)	Name	Description
31:0	INT	**Pure Interrupt** 0: No interrupt source is asserted 1: Interrupt source is asserted

100002A8 **INT_MSEL** **Interrupt Mode Selection Register** **00000000**

Bit	31	30	29	28	27	26	25	24	23	22	21	20	19	18	17	16
Name	RESV[30:15]															
Type	RW															
Reset	0	0	0	0	0	0	0	0	0	0	0	0	0	0	0	0
Bit	15	14	13	12	11	10	9	8	7	6	5	4	3	2	1	0
Name	RESV[14:0]															SEL
Type	RW															RW
Reset	0	0	0	0	0	0	0	0	0	0	0	0	0	0	0	0

Bit(s)	Name	Description
31:1	RESV	**Reserved**
0	SEL	**Interrupt Mode Selection** 0: Compatibility & Vectored Interrupt Mode 1: External Interrupt Controller Mode

MEDIATEK CONFIDENTIAL
FOR farrwang@synnex.com.tw USE ONLY

This document contains information that is proprietary to MediaTek Inc.
Unauthorized reproduction or disclosure of this information in whole or in part is strictly prohibited.

2.5 EMC Controller

2.5.1 Regsiter

EXT_MC_ARB Changes LOG

Revision	Date	Author	Change Log
0.1	2012/10/5	Lancelot	Initialization
0.2	2013/8/19	YS Xiao	Modify to MT7628

Module name: EXT_MC_ARB Base address: (+10000300h)

Address	Name	Width	Register Function
10000300	SDRAM_CFG0	32	SDRAM Configuration 0
10000304	SDRAM_CFG1	32	SDRAM Configuration 1
10000308	ILL_ACC_ADDR	32	Illegal Access Address Capture
1000030C	ILL_ACC_TYPE	32	Illegal Access Type Capture
10000310	DDR_SELF_REFRESH	32	ODT and Self-Refresh Configuration
10000314	SDR_DDR_PWR_SAVE_CNT	32	Self-Refresh Time Count
10000320	DLL_DBG	32	DRAM DLL Debug Probe
10000340	DDR_CFG0	32	DDR1/DDR2 controller configuration 0 register
10000344	DDR_CFG1	32	DDR1/DDR2 controller configuration 1 register
10000348	DDR_CFG2	32	DDR1/DDR2 controller configuration 2 register
1000034C	DDR_CFG3	32	DDR1/DDR2 controller configuration 3 register
10000350	DDR_CFG4	32	DDR1/DDR2 controller configuration 4 register
10000360	DDR_DQ_DLY	32	DDR1/DDR2 DQ delay control register
10000364	DDR_DQS_DLY	32	DDR1/DDR2 DQS delay control register
10000368	DDR_DLL_SLV	32	DDR1/DDR2 DLL slave control register
1000036C	DDR_DLL_MST	32	DDR1/DDR2 DLL master control register
10000380	MC_ARB_CFG	32	MC 2 to 1 arbiter setting
10000384	MC_AG_BW	32	MC Channel BW/QoS_Type/DueDate Setting
10000390	RB_DBG	32	RB Debug
10000394	RB_STATE	32	RB Debug State
10000398	RB_BW	32	RB Bandwidth
1000039C	RB_LAT	32	RB Latency

10000300 SDRAM_CFG0 SDRAM Configuration 0 **51925282**

Bit	31	30	29	28	27	26	25	24	23	22	21	20	19	18	17	16
Name	DIS_CLK_GT	CLK_SLEW		TWR	TMRD				TRFC				RSV0		TCAS	
Type	RW	RW		RW	RW				RW				RO		RW	
Reset	0	1	0	1	0	0	0	1	1	0	0	1	0	0	1	0
Bit	15	14	13	12	11	10	9	8	7	6	5	4	3	2	1	0
Name	TRAS				RSV1		TRCD		TRC				RSV2		TRP	

MEDIATEK CONFIDENTIAL
FOR tarwang@sunnet.com.tw USE ONLY

This document contains information that is proprietary to MediaTek Inc.
Unauthorized reproduction or disclosure of this information in whole or in part is strictly prohibited.

Type	RW				RO		RW		RW				RO		RW	
Reset	0	1	0	1	0	0	1	0	1	0	0	0	0	0	1	0

Bit(s)	Name	Description
31	DIS_CLK_GT	**Disable Clock Gating** Disables clock gating of the SDR DRAM controller. 0: Enable 1: Disable
30:29	CLK_SLEW	**Reserved**
28	TWR	**Write Recovery Time** (unit: system clock cycles - 1)
27:24	TMRD	**Load Mode Register command to any other command delay.** (unit: system clock cycles - 1)
23:20	TRFC	**Auto Refresh period** (unit: system clock cycles - 1)
19:18	RSV0	**Reserved**
17:16	TCAS	**CAS Latency Time** (unit: system clock cycles - 1)
15:12	TRAS	**The Active To Precharge command delay.** (unit: system clock cycles - 1)
11:10	RSV1	**Reserved**
9:8	TRCD	**Active To Read or Write delay (RAS to CAS delay)** (unit: system clock cycles - 1)
7:4	TRC	**Active To Active command period** (unit: system clock cycles - 1)
3:2	RSV2	**Reserved**
1:0	TRP	**Precharge command period** (unit: system clock cycles - 1)

10000304 **SDRAM_CFG 1** **SDRAM Configuration 1** **01120600**

Bit	31	30	29	28	27	26	25	24	23	22	21	20	19	18	17	16
Name	SDRAM_INIT_START	SDRAM_INIT_DONE	RBC_MAPPING	PWR_DOWN_EN	PWR_DOWN_MODE	RSV0		SDRAM_WIDTH	RSV1		NUMCOLS		RSV2		NUMROWS	
Type	RW	RO	RW	RW	RW	RO		RW	RO		RW		RO		RW	
Reset	0	0	0	0	0	0	0	1	0	0	0	1	0	0	1	0
Bit	15	14	13	12	11	10	9	8	7	6	5	4	3	2	1	0
Name	TREFR															
Type	RW															
Reset	0	0	0	0	0	1	1	0	0	0	0	0	0	0	0	0

Bit(s)	Name	Description
31	SDRAM_INIT_START	**SDRAM Initialization Start performs the SDRAM initialization sequence.** Can not set this bit to 0 after initialization. 1: Start intialization
30	SDRAM_INIT_DONE	**SDRAM Initialization Done** Indicates the SDRAM has been initialized. 0: Not initialized.

MEDIATEK CONFIDENTIAL
FOR fanrwang@symnex.com.tw USE ONLY

This document contains information that is proprietary to MediaTek Inc.
Unauthorized reproduction or disclosure of this information in whole or in part is strictly prohibited.

Bit(s)	Name	Description
		1: Initialized.
29	RBC_MAPPING	**RBC Mapping** Selects the address mapping scheme. 0: {BANK ADDR, ROW ADDR, COL ADDR} address mapping scheme 1: {ROW ADDR, BANK ADDR, COL ADDR} address mapping scheme
28	PWR_DOWN_EN	**Power Down Enable** Enables the SDRAM precharge power-down mode to save standby power. 0: Disable 1: Enable
27	PWR_DOWN_MODE	**Power Down Mode** 0: Precharge power down mode 1: Active power down
26:25	RSV0	**Reserved**
24	SDRAM_WIDTH	**SDRAM Width** Selects the number of SDRAM data bus bits. 0: 16 bits 1: 32 bits
23:22	RSV1	**Reserved**
21:20	NUMCOLS	**Number of Columns** Selects the number of column address bits. 0: 8 Column address bits 1: 9 Column address bits (default) 2: 10 Column address bits 3 11 Column address bits
19:18	RSV2	**Reserved**
17:16	NUMROWS	**Number of Rows** Selects the number of row address bits. 0: 11 Row address bits 1: 12 Row address bits (default) 2: 13 Row address bits 3: 14 Row address bits
15:0	TREFR	**AUTO REFRESH period** (unit: SDRAM clock cycles - 1).

10000308 **ILL_ACC_ADDR** **Illegal Access Address Capture** **00000000**

Bit	31	30	29	28	27	26	25	24	23	22	21	20	19	18	17	16
Name	ILL_ACC_ADDR[31:16]															
Type	RO															
Reset	0	0	0	0	0	0	0	0	0	0	0	0	0	0	0	0
Bit	15	14	13	12	11	10	9	8	7	6	5	4	3	2	1	0
Name	ILL_ACC_ADDR[15:0]															
Type	RO															
Reset	0	0	0	0	0	0	0	0	0	0	0	0	0	0	0	0

Bit(s)	Name	Description
31:0	ILL_ACC_ADDR	**Illegal Access Address if any bus masters (including CPU) issue illegal accesses (e.g. accesses to reserved memory space, or non-double-word accesses to configuration registers), the address of the illegal transaction is captured in this register.** An illegal interrupt is generated to indicate this exception.

MEDIATEK CONFIDENTIAL
FOR fairwang@sunnex.com.tw USE ONLY

This document contains information that is proprietary to MediaTek Inc.
Unauthorized reproduction or disclosure of this information in whole or in part is strictly prohibited.

1000030C **ILL_ACC_TYPE** **Illegal Access Type Capture** **00000000**

Bit	31	30	29	28	27	26	25	24	23	22	21	20	19	18	17	16
Name	ILL_INT_STATUS	ILL_ACC_WR	RSV0										ILL_ACC_BSEL			
Type	W1C	RO	RO										RO			
Reset	0	0	0	0	0	0	0	0	0	0	0	0	0	0	0	0
Bit	15	14	13	12	11	10	9	8	7	6	5	4	3	2	1	0
Name	RSV1					ILL_IID			ILL_ACC_LEN							
Type	RO					RO			RO							
Reset	0	0	0	0	0	0	0	0	0	0	0	0	0	0	0	0

Bit(s)	Name	Description
31	ILL_INT_STATUS	**Illegal Access Interrupt Status** Indicates whether the ilegal access interrupt is cleared or pending. Read 0: Cleared 1: Pending Write 1: Clear both the ILL_ACC_ADDR and ILL_ACC_TYPE registers and thus clear ILL_INT_STATUS.
30	ILL_ACC_WR	**Illegal Access Write** Indicates the illegal access is a read or a write. 0: A read access 1: A write access
29:20	RSV0	**Reserved**
19:16	ILL_ACC_BSEL	**Illegal Access Byte Select** Indicates which bytes were illegally accessed.
15:11	RSV1	**Reserved**
10:8	ILL_IID	**Illegal Access Initiator ID** Indicates the initiator ID of the illegal access. 0: CPU 1: DMA 2: PPE 3: Ethernet PDMA Rx 4: Ethernet PDMA Tx 5: PCI/PCIE 6: Embedded WLAN MAC/BBP 7: USB
7:0	ILL_ACC_LEN	**Illegal Access Length** Indicates the access size of the illegal access. (unit: bytes)

10000310 **DDR_SELF_REFRESH** **ODT and Self-Refresh Configuration** **0E120001**

Bit	31	30	29	28	27	26	25	24	23	22	21	20	19	18	17	16
Name	RSV0				ODT_SRC_SEL				ODT_OFF_DLY				ODT_ON_DLY			
Type	RO				RW				RW				RW			
Reset	0	0	0	0	1	1	1	0	0	0	0	1	0	0	1	0
Bit	15	14	13	12	11	10	9	8	7	6	5	4	3	2	1	0
Name	RSV1											SR_AU	RSV2		SRAC	SRRE

MEDIATEK CONFIDENTIAL
FOR taiwan@synnex.com.tw USE ONLY

This document contains information that is proprietary to MediaTek Inc.
Unauthorized reproduction or disclosure of this information in whole or in part is strictly prohibited.

												TO_EN			K_B	Q_B
Type	RO											RW	RO		RO	RW
Reset	0	0	0	0	0	0	0	0	0	0	0	0	0	0	0	1

Bit(s)	Name	Description
31:28	RSV0	**Reserved**
27:24	ODT_SRC_SEL	**ODT Source Select** Sets the DDR pad ODT control source. 0: Dasavtive[0] 1: Dasavtive[1] ... 11: Dasavtive[11] 12: DQS_WINDOW 13: ODT_LOCAL 14: Always on 15: Always off
23:20	ODT_OFF_DLY	**ODT Off Delay** Sets the delay time of the ODT_OFF signal based on the ODT_ON signal. 0: 0 T 1: 0.5 T 2: 1.5 T 3: 2.5 T ... 15: 14.5 T
19:16	ODT_ON_DLY	**ODT On Delay** Sets the delay time of the ODT_ON signal based on the ODT source signal. 0: 0 T 1: 1 T 2: 2 T ... 15: 15 T
15:5	RSV1	**Reserved**
4	SR_AUTO_EN	**Auto Self-Refresh Enable** Enables auto self-refresh for power saving. 0: Disable 1: Enable
3:2	RSV2	**Reserved**
1	SRACK_B	**Self-Refresh Acknowledge Status** Indicates whether DDR2 is in self-refresh mode or has exited from self-refresh mode. When DDR2 changes from self-refresh mode to normal mode, it takes about 200 clock cycles. 0: The DDR2 is in self-refresh mode. 1: The DDR2 has exited from self-refresh mode.
0	SRREQ_B	**Self-Refresh Request Control** Requests DDR2 to enter or exit self-refresh mode. It is low active. 0: Enter self-refresh mode. 1: Exit self-refresh mode.

10000314 **SDR_DDR_PWR_SAVE_CNT** **Self-Refresh Time Count** **0003FFFF**

Bit	31	30	29	28	27	26	25	24	23	22	21	20	19	18	17	16
Name	PD_CNT								SR_TAR_CNT[23:16]							

MEDIATEK CONFIDENTIAL
FOR farrwang@symnex.com.tw USE ONLY

This document contains information that is proprietary to MediaTek Inc.
Unauthorized reproduction or disclosure of this information in whole or in part is strictly prohibited.

Type	RO								RW							
Reset	0	0	0	0	0	0	0	0	0	0	0	0	0	0	1	1
Bit	15	14	13	12	11	10	9	8	7	6	5	4	3	2	1	0
Name	SR_TAR_CNT[15:0]															
Type	RW															
Reset	1	1	1	1	1	1	1	1	1	1	1	1	1	1	1	1

Bit(s)	Name	Description
31:24	PD_CNT	**Power Down Count** Counts the times self-refresh mode is entered
23:0	SR_TAR_CNT	**Self-Refresh Time Count** This counter is only referenced when the SDR (PWR_DOWN_EN) or DDR (SR_AUTO_EN) is set. This counter measures the period SDR or DDR is in IDLE status. When the IDLE period has reached the specified time period, the SDR or DDR automatically enter power-saving or selfrefresh mode. Use the following equations to configure the counter. DRAM_CLK_FREQ is PLL_CLK (600 MHz) divided by 3 DDR: (SR_TAR_CNT * 256 + 255) / DRAM_CLK_FREQ SDR: (SR_TAR_CNT * 256) / DRAM_CLK_FREQ DDR reference table 200 MHz: (32'h03FFFF * 256 + 255) * 5 ns ~= 335 ms SDRAM reference table 120 MHz: 32'h03FFFF * 256 * 8.3 ns ~= 560 ms

10000320 **DLL_DBG** **DRAM DLL Debug Probe** **00000000**

Bit	31	30	29	28	27	26	25	24	23	22	21	20	19	18	17	16
Name	RSV0												RSV1		TDC_STABLE[5:4]	
Type	RO												RO		RO	
Reset	0	0	0	0	0	0	0	0	0	0	0	0	0	0	0	0
Bit	15	14	13	12	11	10	9	8	7	6	5	4	3	2	1	0
Name	TDC_STABLE[3:0]				MST_DLY_SEL								RSV2	CURR_STATE		ADLL_LOCK_DONE
Type	RO				RO								RO	RO		RO
Reset	0	0	0	0	0	0	0	0	0	0	0	0	0	0	0	0

Bit(s)	Name	Description
31:20	RSV0	**Reserved**
19:18	RSV1	**Reserved**
17:12	TDC_STABLE	**ADLL master coarse-grain delay code**
11:4	MST_DLY_SEL	**ADLL master final delay code**
3	RSV2	**Reserved**
2:1	CURR_STATE	**ADLL controller FSM current state**
0	ADLL_LOCK_DONE	**ADLL lock done signal**

10000340 **DDR_CFG0** **DDR1/DDR2 controller configuration 0 register** **249B425B**

MEDIATEK CONFIDENTIAL
FOR fayr.wang@symnex.com USE ONLY

This document contains information that is proprietary to MediaTek Inc.
Unauthorized reproduction or disclosure of this information in whole or in part is strictly prohibited.

Bit	31	30	29	28	27	26	25	24	23	22	21	20	19	18	17	16
Name	T_RRD				T_RAS					T_RP				T_RFC[5:3]		
Type	RW				RW					RW				RW		
Reset	0	0	1	0	0	1	0	0	1	0	0	1	1	0	1	1
Bit	15	14	13	12	11	10	9	8	7	6	5	4	3	2	1	0
Name	T_RFC[2:0]			T_REFI												
Type	RW			RW												
Reset	0	1	0	0	0	0	1	0	0	1	0	1	1	0	1	1

Bit(s)	Name	Description
31:28	T_RRD	**The minimum number of clock cycles from an active command to the next active command for different banks (TRRD). For DDR2 devices, this is required to be a minimum of 2 regardless of the cycle time.**
27:23	T_RAS	**The number of clock cycles from an active command until a pre-charge command is allowed. To obtain this value, one should divide the minimum RAS# to pre-charge delay of the SDRAM by the clock cycle time (TRAS). The sum of Active-to-Pre-charge and Pre-charge-to-Active should be equal or larger than active-to-active delay of the same ban (TRC)**
22:19	T_RP	**The number of clock cycles needed for the SDRAM to recover from a pre-charge command and ready to accept the next active command. To obtain this value, one should divide the RAS# pre-charge time of the SDRAM (TRP) by the clock cycle time. The sum of Active-to-Pre-charge and Pre-charge-to-Active should be equal or larger than active-to-active delay of the same bank (TRC)**
18:13	T_RFC	**Half the number of clock cycles needed for the SDRAM to recover from a refresh signal to be ready to take the next command. To obtain this value, one should divide the SDRAM row cycle time (TRFC) by the clock cycle time.**
12:0	T_REFI	**The number of clock cycles from one refresh command to the next refresh command. To obtain this value, one should divide the periodic refresh interval (TREFI) by the clock cycle time. The actual timing of issuing a pre-charge command may be delayed by if the SDRAM is processing a normal access. However, the delay is not accumulative so there is no need to shorten the refresh interval to account for memory access time. The non-accumulative refresh delay typically increases memory bandwidth by a few percentage points.**

10000344 **DDR_CFG1** **DDR1/DDR2 controller configuration 1 register** **222E2424**

Bit	31	30	29	28	27	26	25	24	23	22	21	20	19	18	17	16
Name	T_WTR				T_RTP				RSV0		USER_DATA_WIDTH	IND_SDRAM_SIZE			IND_SDRAM_WIDTH	
Type	RW				RW				RO		RW	RW			RW	
Reset	0	0	1	0	0	0	1	0	0	0	1	0	1	1	1	0
Bit	15	14	13	12	11	10	9	8	7	6	5	4	3	2	1	0
Name	EXT_BANK		TOTAL_SDRAM_WIDTH		T_WR				T_MRD				T_RCD			
Type	RW		RW		RW				RW				RW			
Reset	0	0	1	0	0	1	0	0	0	0	1	0	0	1	0	0

Bit(s)	Name	Description
31:28	T_WTR	**The write-to-read delay (TWTR) (last write data to the next read**

© 2014 MediaTek Inc.
This document contains information that is proprietary to MediaTek Inc.
Unauthorized reproduction or disclosure of this information in whole or in part is strictly prohibited.

MEDIATEK CONFIDENTIAL
FOR fanwang@ sjtex.com.cn USE ONLY

Bit(s)	Name	Description
		command) as specified by the DDR2 data sheet
27:24	T_RTP	**The read-to-pre-charge delay (TRTP) as specified by the DDR2 data sheet. Note that this is a DDR2 requirement, and requires a minimum of 2 cycles. These bits are ignored in DDR mode.**
23:22	RSV0	**Reserved**
21	USER_DATA_WIDTH	**Specify user data width** 0: 32-bit 1: 64-bit When user data width is 32-bit, total SDRAM width (bit[13:12]) must be 10. NOTE: This system is always 64-bit. Please do not modify this setting.
20:18	IND_SDRAM_SIZE	**Specify individual SRAM size** 000: Reserved 001: Individual SDRAM is 64 Mbit, (DDR only) 010: Individual SDRAM is 128 Mbit, (DDR only) 011: Individual SDRAM is 256 Mbit. 100: Individual SDRAM is 512 Mbit. 101: Individual SDRAM is 1 Gbit. 110: Individual SDRAM is 2 Gbit, (DDR2 only). 111: Reserved
17:16	IND_SDRAM_WIDTH	**Specify individual SRAM data width** 00: Reserved 01: 8-bit. 10: 16-bit. 11: Reserved
15:14	EXT_BANK	**Specify bank/module configuration** 00: 1 external bank, 1 module. (CS#[0]) 01: 2 external bank, 1 module. (CS#[1:0]), 10: Reserved 11: 2 external banks, 2 modules. (CS#[1:0]) NOTE: only one CS pin.
13:12	TOTAL_SDRAM_WIDTH	**This field specifies the total data width to the SDRAM. For example, if four 8-bit wide DDR2 chips are used in parallel to form a 32-bit DDR2 data width, this field should be defined as 11 to indicate a 32-bit width. In this case, bit[17:16] should be defined as 01.** 00: Reserved 01: Reserved 10: 16-bit 11: 32-bit. Allowed only when user data width is 64-bit (bit21 is 1).
11:8	T_WR	**The clock cycles needed for the DDR to recover from a write command and be able to accept a pre-charge command. To obtain this value, divide the SDRAM write recovery time by the clock cycle time (TWR)**
7:4	T_MRD	**The number of clock cycles after the setting of the mode registers in the DDR and before the issue of the next command. To obtain this value, divide the Mode Register Set Cycle time (TMRD) by the clock cycle time.**
3:0	T_RCD	**The number of clock cycles from an active command to a read/write assertion. To obtain this value, divide the RAS# to CAS# delay time (TRCD) by the clock cycle time.**

10000348 **DDR_CFG2** **DDR1/DDR2 controller configuration 2 register** **43FFE443**

Bit	31	30	29	28	27	26	25	24	23	22	21	20	19	18	17	16
Name	REGE	DDR2_MODE	DQS0_GATING_WINDOW		DQS1_GATING_WINDOW		RSV0[12:3]									

© 2014 MediaTek Inc.
This document contains information that is proprietary to MediaTek Inc.
Unauthorized reproduction or disclosure of this information in whole or in part is strictly prohibited.

MEDIATEK CONFIDENTIAL
FOR jarrwang@tjnet.com.tw USE ONLY

Type	RW	RW	RW		RW		RO									
Reset	0	1	0	0	0	0	1	1	1	1	1	1	1	1	1	1
Bit	15	14	13	12	11	10	9	8	7	6	5	4	3	2	1	0
Name	RSV0[2:0]			PD	WR			DLL RE SET	TES TM OD E	CAS_LATENCY			BU RS T_T YP E	BURST_LENGTH		
Type	RO			RW	RW			RW	RW	RW			RO	RW		
Reset	1	1	1	0	0	1	0	0	0	1	0	0	0	0	1	1

Bit(s)	Name	Description
31	REGE	**This bit should be high when external registers are inserted in the controller and address signals are sent between the controller and the DDR SDRAM. One example of such instance is when register mode SDRAM DIMM is used. This bit should be low when the control and address signals from the controller is connected to the SDRAM without register delay.**
30	DDR2_MODE	**This bit determines whether the memory controller is in DDR1 or DDR2 mode.** 0: DDR1 mode 1: DDR2 mode
29:28	DQS0_GATING_WINDOW	**Controls the mask for the data strobe 0 (DQS0) window leading and trailing edge.** 00: Half extended cycle for the leading and trailing edge of DQS window (maximum window) 01: Only half extended cycle for leading edge of DQS window 10: Only half extended cycle for trailing edge of DQS window 11: No extended cycle for leading and trailing edge of DQS window (minimum window)
27:26	DQS1_GATING_WINDOW	**Controls the mask for the data strobe 1 DQS1 window leading and trailing edge.** 00: Half extended cycle for the leading and trailing edge of DQS window (maximum window) 01: Only half extended cycle for leading edge of DQS window 10: Only half extended cycle for trailing edge of DQS window 11: No extended cycle for leading and trailing edge of DQS window (minimum window)
25:13	RSV0	**Reserved**
12	PD	**Active Memory Power Down Exit Time** 0: Fast exit time (TXARD) 1: Slow exit time(TXARDS) This bit is used for DDR2 only. This bit must be 0 for DDR1.
11:9	WR	**Auto Pre-charge Write Recovery (TDAL)** These bits must be 0 for DDR1.
8	DLLRESET	**SDRAM Delay Locked Loop (DLL) Reset** 0: Normal operation 1: Normal operation with DLL reset
7	TESTMODE	**Set SDRAM to run test mode.** 0: Normal operation. 1: Test mode. The user must keep this bit at 0 if SDRAM does not support TESTMODE bit.
6:4	CAS_LATENCY	**Specifies the number of the clock cycles from the assertion of a read/write signal to the SDRAM until the first valid data on the output from the SDRAM. The valid numbers are:** 101: 1.5 for DDR1 or 5 for DDR2. 010: 2 110: 2.5 (DDR1 only) 011: 3

MEDIATEK CONFIDENTIAL
FOR farrwan@synnex.com.tw USE ONLY

This document contains information that is proprietary to MediaTek Inc.
Unauthorized reproduction or disclosure of this information in whole or in part is strictly prohibited.

Bit(s)	Name	Description
		100: 4 (DDR2 only)
3	BURST_TYPE	**This register is hardwired to 0 to indicate a sequential burst type.**
2:0	BURST_LENGTH	**Indicates the burst length of the read/write transaction.** 010: 4 bursts 011: 8 bursts NOTE: 1. A burst of 4 is not allowed when user data is 64-bit while SDRAM data is 16-bit. 2. A burst of 8 is allowed in all user/SDRAM data width combination. 3. Other values for burst length are not allowed.

1000034C **DDR_CFG3** **DDR1/DDR2 controller configuration 3 register** **FFFFE412**

Bit	31	30	29	28	27	26	25	24	23	22	21	20	19	18	17	16
Name	RSV0[18:3]															
Type	RO															
Reset	1	1	1	1	1	1	1	1	1	1	1	1	1	1	1	1
Bit	15	14	13	12	11	10	9	8	7	6	5	4	3	2	1	0
Name	RSV0[2:0]			Q_OFF	RDOS	DIS_DIFF_DQS	OCD			RTT1	ADDITIVE_LATENCY			RTT0	DS	DLL
Type	RO			RW	RW	RW	RW			RW	RW			RW	RW	RW
Reset	1	1	1	0	0	1	0	0	0	0	0	1	0	0	1	0

Bit(s)	Name	Description
31:13	RSV0	**Reserved**
12	Q_OFF	**Output Buffer Disable** 0: Enabled 1: Disabled This bit is used for DDR2 only. This bit must be 0 for DDR1.
11	RDOS	**Redundant Data Strobe (DQS)** This bit enables the redundant DQS function if supported by the SDRAM. 0: Disable 1: Enable This bit is used for DDR2 only and must be 0 for DDR1.
10	DIS_DIFF_DQS	**Disable differential DQS** 0: Enable 1: Disable This bit is used for DDR2 only and must be 0 for DDR1.
9:7	OCD	**Off-Chip Driver Impedance Calibration (OCD)** These bits support the OCD function if supported by the SDRAM. The value programmed in these register bits will be programmed into the SDRAM at EMR1 programming. Settings are vendor-dependant.
6	RTT1	**Internal Termination Resistor (RTT) bit 1** Used together with bit 2 (RTT0) to control On-Die Termination (ODT). Combine values for (RTT1, RTT0) to select ODT settings. 00: ODT disabled. 01: 75 ohm 10: 150 ohm 11: Reserved This bit is used for DDR2 only and must be 0 for DDR1.
5:3	ADDITIVE_LATENCY	**Additive Latency** 000: 0 cycle

MEDIATEK CONFIDENTIAL
FOR farrwang@symnex.com.tw USE ONLY

This document contains information that is proprietary to MediaTek Inc.
Unauthorized reproduction or disclosure of this information in whole or in part is strictly prohibited.

Bit(s)	Name	Description
		001: 1 cycle 010: 2 cycles 011: 3 cycles 100: 4 cycles 101: 5 cycles Others: Reserved This bit is used for DDR2 only and must be 0 for DDR1.
2	RTT0	**Internal Termination Resistor (RTT) bit 0** Used together with bit 6 (RTT1) to control ODT. This bit is used for DDR2 only and must be 0 for DDR1.
1	DS	**SDRAM drive Strength** 0: 100% drive strength. 1: 60% drive strength.
0	DLL	**SDRAM Delay Locked Loop (DLL) Enable** 0: Disable 1: Enable

10000350 **DDR_CFG4** **DDR1/DDR2 controller configuration 4 register** **FFFFFFF4**

Bit	31	30	29	28	27	26	25	24	23	22	21	20	19	18	17	16
Name	RSV0[26:11]															
Type	RO															
Reset	1	1	1	1	1	1	1	1	1	1	1	1	1	1	1	1
Bit	15	14	13	12	11	10	9	8	7	6	5	4	3	2	1	0
Name	RSV0[10:0]											FAW				
Type	RO											RW				
Reset	1	1	1	1	1	1	1	1	1	1	1	1	0	1	0	0

Bit(s)	Name	Description
31:5	RSV0	**Reserved**
4:0	FAW	**Four Activated Windows (FAW) Period** DDR2 devices impose a restriction in that no more than 4 ACTIVE commands may be issued in a given FAW period. To obtain this value, one should divide the Four Bank Activate period (TFAW) of the DDR by the clock cycle time. These bits are ignored in 4 bank devices.

10000360 **DDR_DQ_DLY** **DDR1/DDR2 DQ delay control register** **00008888**

Bit	31	30	29	28	27	26	25	24	23	22	21	20	19	18	17	16
Name	DQ_GROUP1_DELAY_SEL								DQ_GROUP0_DELAY_SEL							
Type	RW								RW							
Reset	0	0	0	0	0	0	0	0	0	0	0	0	0	0	0	0
Bit	15	14	13	12	11	10	9	8	7	6	5	4	3	2	1	0
Name	DQ_GROUP1_DELAY_COARSE_TUNING				DQ_GROUP1_DELAY_FINE_TUNING				DQ_GROUP0_DELAY_COARSE_TUNING				DQ_GROUP0_DELAY_FINE_TUNING			
Type	RW				RW				RW				RW			
Reset	1	0	0	0	1	0	0	0	1	0	0	0	1	0	0	0

Bit(s)	Name	Description
31:24	DQ_GROUP1_DELAY_SEL	**Force Data Group 1 (MD8 to MD15) Output Delay. Valid when DQ_DLY_SEL_EN is 1.** bit7~4: for coarse-grain delay setting

FOR MEDIATEK CONFIDENTIAL
fan.yang@synnex.com.tw USE ONLY

This document contains information that is proprietary to MediaTek Inc.
Unauthorized reproduction or disclosure of this information in whole or in part is strictly prohibited.

Bit(s)	Name	Description
		bit3~0: for fine-grain delay setting
23:16	DQ_GROUP0_DELAY_SEL	**Force Data Group 0 (MD0 to MD7) Output Delay. Valid when DQ_DLY_SEL_EN is 1.** bit7~4: for coarse-grain delay setting bit3~0: for fine-grain delay setting
15:12	DQ_GROUP1_DELAY_COARSE_TUNING	**Data Group 1 (MD8 to MD15) Output Delay Coarse-Grain Tuning** 0x0 to 0x7: Decrease delay by 250 ps per step. 0x8: Keep DLL delay. 0x9 to 0xF: Increase delay by 250 ps per step.
11:8	DQ_GROUP1_DELAY_FINE_TUNING	**Data Group 1 (MD8 to MD15) Output Delay Fine-Grain Tuning** 0x0 to 0x7: Decrease delay by 30 ps per step. 0x8: Keep DLL delay. 0x9 to 0xF: Increase delay by 30 ps per step.
7:4	DQ_GROUP0_DELAY_COARSE_TUNING	**Data Group 0 (MD0 to MD7) Output Delay Coarse-Grain Tuning** 0x0 to 0x7: Decrease delay by 250 ps per step. 0x8: Keep DLL delay. 0x9 to 0xF: Increase delay by 250 ps per step.
3:0	DQ_GROUP0_DELAY_FINE_TUNING	**Data Group 0 (MD0 to MD7) Output Delay Fine-Grain Tuning** 0x0 to 0x7: Decrease delay by 30 ps per step. 0x8: Keep DLL delay. 0x9 to 0xF: Increase delay by 30 ps per step.

10000364 **DDR_DQS_DLY** **DDR1/DDR2 DQS delay control register** **00008888**

Bit	31	30	29	28	27	26	25	24	23	22	21	20	19	18	17	16
Name	DQS1_DELAY_SEL								DQS0_DELAY_SEL							
Type	RW								RW							
Reset	0	0	0	0	0	0	0	0	0	0	0	0	0	0	0	0
Bit	15	14	13	12	11	10	9	8	7	6	5	4	3	2	1	0
Name	DQS1_DELAY_COARSE_TUNING				DQS1_DELAY_FINE_TUNING				DQS0_DELAY_COARSE_TUNING				DQS0_DELAY_FINE_TUNING			
Type	RW				RW				RW				RW			
Reset	1	0	0	0	1	0	0	0	1	0	0	0	1	0	0	0

Bit(s)	Name	Description
31:24	DQS1_DELAY_SEL	**Force Data Strobe 1 (MDQS1) Input Delay. Valid when DQS_DLY_SEL_EN is 1** bit7~4: for coarse-grain delay setting bit3~0: for fine-grain delay setting
23:16	DQS0_DELAY_SEL	**Force Data Strobe 0 (MDQS0) Input Delay. Valid when DQS_DLY_SEL_EN is 1** bit7~4: for coarse-grain delay setting bit3~0: for fine-grain delay setting
15:12	DQS1_DELAY_COARSE_TUNING	**Data Strobe 1 Input Delay Coarse-Grain Tuning** 0x0 to 0x7: Decrease delay by 250 ps per step. 0x8: Keep DLL delay. 0x9 to 0xF: Increase delay by 250 ps per step.
11:8	DQS1_DELAY_FINE_TUNING	**Data Strobe 1 Input Delay Fine-Grain Tuning** 0x0 to 0x7: Decrease delay by 30 ps per step. 0x8: Keep DLL delay. 0x9 to 0xF: Increase delay by 30 ps per step.
7:4	DQS0_DELAY_COARSE_TUNING	**Data Strobe 0 Input Delay Coarse-Grain Tuning** 0x0 to 0x7: Decrease delay by 250 ps per step.

MEDIATEK CONFIDENTIAL
FOR farwane@symnz.com.tw USE ONLY

This document contains information that is proprietary to MediaTek Inc.
Unauthorized reproduction or disclosure of this information in whole or in part is strictly prohibited.

Bit(s)	Name	Description
3:0	DQS0_DELAY_FINE_TUNING	0x8: Keep DLL delay. 0x9 to 0xF: Increase delay by 250 ps per step. **Data Strobe 0 Input Delay Fine-Grain Tuning** 0x0 to 0x7: Decrease delay by 30 ps per step. 0x8: Keep DLL delay. 0x9 to 0xF: Increase delay by 30 ps per step.

10000368 **DDR_DLL_SLV** **DDR1/DDR2 DLL slave control register** **00000000**

Bit	31	30	29	28	27	26	25	24	23	22	21	20	19	18	17	16
Name	RSV0[22:7]															
Type	RO															
Reset	0	0	0	0	0	0	0	0	0	0	0	0	0	0	0	0
Bit	15	14	13	12	11	10	9	8	7	6	5	4	3	2	1	0
Name	RSV0[6:0]							DLL_SLV_UPDATE_MODE	RSV1			DQS_DLY_SEL_EN	RSV2			DQ_DLY_SEL_EN
Type	RO							RW	RO			RW	RO			RW
Reset	0	0	0	0	0	0	0	0	0	0	0	0	0	0	0	0

Bit(s)	Name	Description
31:9	RSV0	**Reserved**
8	DLL_SLV_UPDATE_MODE	**Set DLL slave update mode.** 0: Update delay code only when bank is activated. 1: Continous update
7:5	RSV1	**Reserved**
4	DQS_DLY_SEL_EN	**0: DQS Input Delay decided by DLL.** 1: Force DQS Input Delay by DQS0_DELAY_SEL / DQS1_DELAY_SEL.
3:1	RSV2	**Reserved**
0	DQ_DLY_SEL_EN	**0: DQ Output Delay decided by DLL.** 1: Force DQ Output Delay by DQ_GROUP0_DELAY_SEL / DQ_GROUP1_DELAY_SEL.

1000036C **DDR_DLL_MST** **DDR1/DDR2 DLL master control register** **00000000**

Bit	31	30	29	28	27	26	25	24	23	22	21	20	19	18	17	16
Name	DLL_MAS_RELOCK_EN	RSV0					DLL_MAS_BYPASS_FD	DLL_MAS_BYPASS_CD	RSV1[11:4]							
Type	RW	RO					RW	RW	RO							
Reset	0	0	0	0	0	0	0	0	0	0	0	0	0	0	0	0
Bit	15	14	13	12	11	10	9	8	7	6	5	4	3	2	1	0
Name	RSV1[3:0]				DLL_MAS_FIXED_FD				RSV2		DLL_MAS_FIXED_CD					
Type	RO				RW				RO		RW					
Reset	0	0	0	0	0	0	0	0	0	0	0	0	0	0	0	0

MEDIATEK CONFIDENTIAL
FOR farrwang@synnex.com.tw USE ONLY

© 2014 MediaTek Inc.
This document contains information that is proprietary to MediaTek Inc.
Unauthorized reproduction or disclosure of this information in whole or in part is strictly prohibited.

Bit(s)	Name	Description
31	DLL_MAS_RELOCK_EN	**Delayed Locked Loop (DLL) Master Relock Enable** 0: Disable relocking scheme. 1: Enable relocking scheme. DLL supports restarting locking from initial value if DLL is not locked after waiting 512 cycles.
30:26	RSV0	**Reserved**
25	DLL_MAS_BYPASS_FD	**DLL Bypass Fine Grain Delay** 0: Fine-grain delay code is determined by DLL. 1: Fine-grain delay code is fixed by DLL_MAS_FIXED_FD.
24	DLL_MAS_BYPASS_CD	**DLL Bypass Coarse Grain Delay** 0: Coarse-grain delay code is determined by DLL 1: Coarse-grain delay code is fixed by DLL_MAS_FIXED_CD.
23:12	RSV1	**Reserved**
11:8	DLL_MAS_FIXED_FD	**DLL Fixed Fine Grain Delay** Specifies the fine-grain delay. The effective range is 0 to 15. Each step is about 30 ps.
7:6	RSV2	**Reserved**
5:0	DLL_MAS_FIXED_CD	**DLL Fixed Coarse Grain Delay** Specifies the coarse-grain delay. The delay = ((x-2)/4-1)*250 ps, the effective range of x is 10 to 52.

10000380 **MC_ARB_CFG** **MC 2 to 1 arbiter setting** **07FAC688**

Bit	31	30	29	28	27	26	25	24	23	22	21	20	19	18	17	16
Name	RSV0					preempt_en	trtc_en	class_en	cls_priority[23:16]							
Type	RO					RW	RW	RW	RW							
Reset	0	0	0	0	0	1	1	1	1	1	1	1	1	0	1	0
Bit	15	14	13	12	11	10	9	8	7	6	5	4	3	2	1	0
Name	cls_priority[15:0]															
Type	RW															
Reset	1	1	0	0	0	1	1	0	1	0	0	0	1	0	0	0

Bit(s)	Name	Description
31:27	RSV0	**Reserved**
26	preempt_en	**Preemption Enable** Request preemption, higher priority requestor may change current request transaction 0: Disable Preemption 1: Enable Preemption
25	trtc_en	**Two Rate Three Color Bandwidth (TRTC) Meter Enable** 0: Disable TRTC 1: Enable TRTC
24	class_en	**QoS Classifier Enable** 0: Disable CLASS 1: Enable CLASS TRTC (0) CLASS (0) Round Robin TRTC (0) CLASS (1) Fixed Priority TRTC (1) CLASS (0) BW RR TRTC (1) CLASS (1) QoS Arb

MEDIATEK CONFIDENTIAL
FOR fairwang@symtex.com.tw USE ONLY

This document contains information that is proprietary to MediaTek Inc.
Unauthorized reproduction or disclosure of this information in whole or in part is strictly prohibited.

Bit(s)	Name	Description
23:0	cls_priority	**Class Priority** This field is used for class priority for second arbitration. {BEy(3'd7), LCg(3'd6), BSy(3'd5), LSy(3'd4), BEg (3'd3), BSg (3'd2), LSg(3'd1), LCgd(3'd0)}

10000384 **MC_AG_BW** **MC Channel BW/QoS_Type/DueDate Setting** **0110FF40**

Bit	31	30	29	28	27	26	25	24	23	22	21	20	19	18	17	16
Name	ag_wr	RSV0		ag_sel	RSV1		ag_qos_type		ag_duedate							
Type	WO	RO		RW	RO		RW		RW							
Reset	0	0	0	0	0	0	0	1	0	0	0	1	0	0	0	0
Bit	15	14	13	12	11	10	9	8	7	6	5	4	3	2	1	0
Name	ag_pir								ag_cir							
Type	RW								RW							
Reset	1	1	1	1	1	1	1	1	0	1	0	0	0	0	0	0

Bit(s)	Name	Description
31	ag_wr	**Agent Write** 0: Read 1: Write
30:29	RSV0	**Reserved**
28	ag_sel	**DMA Agent Select** Selects a DMA agent to configure. 0: CPU (Rbus0) 1: DMA (Rbus1)
27:26	RSV1	**Reserved**
25:24	ag_qos_type	**Agent QoS Type** 0: Latency critical 1: Latency sensitive (CPU) 2: Bandwidth sensitive (DMA) 3: Best Effort
23:16	ag_duedate	**Due date for latency critical agent** (unit: system bus clock cycle - system bus is 300 MHz or 225 MHz depending on bootstrap value.)
15:8	ag_pir	**Peak Information Rate for the Agent** The PIR is greater than or equal to the CIR. Bandwidth which exceeds PIR is marked red. 0x00: 0 MB/s 0x01: 8 MB/s ... 0x40: 512 MB/s ... 0xFF: 2040 MB/s (Max)
7:0	ag_cir	**Committed Information Rate for the Agent** Bandwidth which falls below the CIR is marked green. BW which exceeds the CIR but is below the EIR is marked yellow. 0x00: 0 MB/s 0x01: 8 MB/s ... 0x40: 512 MB/s (default) ... 0xFF: 2040 MB/s (Max)

MEDIATEK CONFIDENTIAL
FOR farrwane@synnex.com.tw USE ONLY

This document contains information that is proprietary to MediaTek Inc.
Unauthorized reproduction or disclosure of this information in whole or in part is strictly prohibited.

10000390 RB_DBG RB Debug 00000000

Bit	31	30	29	28	27	26	25	24	23	22	21	20	19	18	17	16
Name	RSV0[30:15]															
Type	RO															
Reset	0	0	0	0	0	0	0	0	0	0	0	0	0	0	0	0
Bit	15	14	13	12	11	10	9	8	7	6	5	4	3	2	1	0
Name	RSV0[14:0]															rb_sel
Type	RO															RW
Reset	0	0	0	0	0	0	0	0	0	0	0	0	0	0	0	0

Bit(s)	Name	Description
31:1	RSV0	**Reserved**
0	rb_sel	**RB channel select for debug message dump**

10000394 RB_STATE RB Debug State 00000000

Bit	31	30	29	28	27	26	25	24	23	22	21	20	19	18	17	16
Name	RSV0[20:5]															
Type	RO															
Reset	0	0	0	0	0	0	0	0	0	0	0	0	0	0	0	0
Bit	15	14	13	12	11	10	9	8	7	6	5	4	3	2	1	0
Name	RSV0[4:0]					rb_rw	rb_state		rb_length							
Type	RO					RO	RO		RO							
Reset	0	0	0	0	0	0	0	0	0	0	0	0	0	0	0	0

Bit(s)	Name	Description
31:11	RSV0	**Reserved**
10	rb_rw	**RB channel RW**
9:8	rb_state	**RB channel State** 2'b00: IDLE 2'b01: REQ 2'b10: ACK 2'b11: DATA
7:0	rb_length	**RB channel burst length (Byte)**

10000398 RB_BW RB Bandwidth 00000000

Bit	31	30	29	28	27	26	25	24	23	22	21	20	19	18	17	16
Name	bw_rst	RSV0	avg_bw										peak_bw[9:6]			
Type	WO	RO	RO										RO			
Reset	0	0	0	0	0	0	0	0	0	0	0	0	0	0	0	0
Bit	15	14	13	12	11	10	9	8	7	6	5	4	3	2	1	0
Name	peak_bw[5:0]						rb_bw									
Type	RO						RO									
Reset	0	0	0	0	0	0	0	0	0	0	0	0	0	0	0	0

Bit(s)	Name	Description

FOR MEDIATEK CONFIDENTIAL
fatwang@symnex.com.tw USE ONLY

This document contains information that is proprietary to MediaTek Inc.
Unauthorized reproduction or disclosure of this information in whole or in part is strictly prohibited.

Bit(s)	Name	Description
31	bw_rst	**Write 1 will reset BW values.**
30	RSV0	**Reserved**
29:20	avg_bw	**Average BW (MB/S)**
19:10	peak_bw	**Peak BW (MB/S)**
9:0	rb_bw	**RB channel BW (MB/S)**

1000039C **RB_LAT** **RB Latency** **00000000**

Bit	31	30	29	28	27	26	25	24	23	22	21	20	19	18	17	16
Name	**lat_rst**	**RSV0**	**avg_lat**										**peak_lat[9:6]**			
Type	WO	RO	RO										RO			
Reset	0	0	0	0	0	0	0	0	0	0	0	0	0	0	0	0
Bit	15	14	13	12	11	10	9	8	7	6	5	4	3	2	1	0
Name	**peak_lat[5:0]**						**rd_lat**									
Type	RO						RO									
Reset	0	0	0	0	0	0	0	0	0	0	0	0	0	0	0	0

Bit(s)	Name	Description
31	lat_rst	**Write 1 will reset latency values**
30	RSV0	**Reserved**
29:20	avg_lat	**Average read latency (T)**
19:10	peak_lat	**Peak read latency (T)**
9:0	rd_lat	**RB channel read latency (T)**

MEDIATEK CONFIDENTIAL
FOR farrwang@ symnex.com.tw USE ONLY

This document contains information that is proprietary to MediaTek Inc.
Unauthorized reproduction or disclosure of this information in whole or in part is strictly prohibited.

2.6 R-Bus Controller

2.6.1 Features

- 8 channel QoS Arbiter
- Configurable Bandwidth and Duedate for each agent
- QoS classifier can be programmed for RR, BW RR, Fixed Priority and QoS Arb

2.6.2 Block Diagram

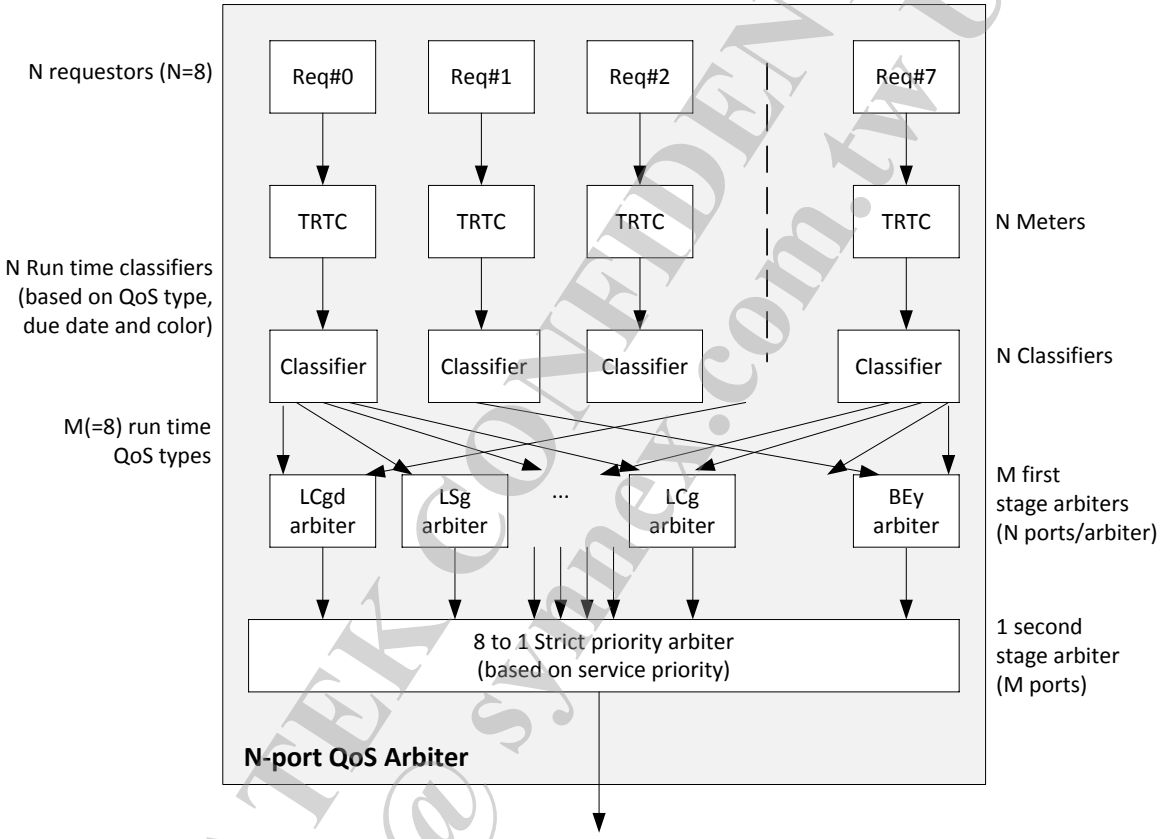

Figure 2-3 QoS Arbitration Block Diagram

2.6.3 Regsiter

Rbus_Matrix_CTRL Changes LOG

Revision	Date	Author	Change Log
0.1	2012/10/2	Lancelot	Initialization
0.2	2013/1/3	Lancelot	Add sleep count
0.2	2013/8/19	YS Xiao	Modify to as MT7621's dma_ch_csr

Module name: Rbus_Matrix_CTRL Base address: (+10000400h)

Address	Name	Widt	Register Function

MEDIATEK CONFIDENTIAL
FOR fae@wang@sjmex.com.tw USE ONLY

This document contains information that is proprietary to MediaTek Inc.
Unauthorized reproduction or disclosure of this information in whole or in part is strictly prohibited.

		h	
10000400	DMA_ARB_CFG	32	**DMA 8 to 1 arbiter setting**
10000404	DMA_AG_BW_CFG	32	**DMA Channel BW/QoS_Type/DueDate Setting**
1000040C	DMA_ROUTE	32	**DMA Routing**
10000410	DMA_MON_AG_SEL	32	**DMA Monitor Agent Select**
10000414	DMA_STATE	32	**DMA State**
10000418	DMA_BW	32	**DMA Bandwidth**
1000041C	DMA_LAT	32	**DMA Latency**
10000420	OCP_CFG0	32	**OCP to Rbus configuration**
10000424	OCP_CFG1	32	**Read bypass write mask**
10000430	R2P_MONITOR	32	**Rbus to APbus monitor**
10000434	R2P_ERR_ADDR	32	**Rbus to APbus error address**
10000440	DYN_CFG0	32	**Dynamic cpu/ocp frequency control**
10000444	DYN_CFG1	32	**CPU sleep step frequency control**
10000448	DYN_CFG2	32	**Dyn CFG Probe**
1000044C	DYN_CFG3	32	**SI_Sleep Serial Counter Setting**
10000450	DYN_CFG4	32	**SI_Sleep Issue Count Counter**
10000454	DYN_CFG5	32	**Sleep Time Counter for SI_Sleep**
10000458	DYN_CFG6	32	**Operation Time Counter for non SI_Sleep**

10000400 DMA_ARB_CFG DMA 8 to 1 arbiter setting 04FAC688

Bit	31	30	29	28	27	26	25	24	23	22	21	20	19	18	17	16
Name	RSV0					preempt_en	trtc_en	class_en	cls_priority[23:16]							
Type	RO					RW	RW	RW	RW							
Reset	0	0	0	0	0	1	0	0	1	1	1	1	1	0	1	0
Bit	15	14	13	12	11	10	9	8	7	6	5	4	3	2	1	0
Name	cls_priority[15:0]															
Type	RW															
Reset	1	1	0	0	0	1	1	0	1	0	0	0	1	0	0	0

Bit(s)	Name	Description
31:27	RSV0	**Reserved**
26	preempt_en	**Preemption Enable** Request preemption, higher priority requestor may change current request transaction 0: Disable Preemption 1: Enable Preemption
25	trtc_en	**Two Rate Three Color Bandwidth (TRTC) Meter Enable** 0: Disable TRTC 1: Enable TRTC
24	class_en	**QoS Classifier Enable** 0: Disable CLASS 1: Enable CLASS TRTC (0) CLASS (0) Round Robin TRTC (0) CLASS (1) Fixed Priority

MEDIATEK CONFIDENTIAL
FOR farrwang@sytnex.com.tw USE ONLY

This document contains information that is proprietary to MediaTek Inc.
Unauthorized reproduction or disclosure of this information in whole or in part is strictly prohibited.

Bit(s)	Name	Description
		TRTC (1) CLASS (0) BW RR TRTC (1) CLASS (1) QoS Arb
23:0	cls_priority	**Class Priority** This field is used for class priority for second arbitration. {BEy(3'd7), LCg(3'd6), BSy(3'd5), LSy(3'd4), BEg (3'd3), BSg (3'd2), LSg(3'd1), LCgd(3'd0)}

10000404 **DMA_AG_BW_CFG** **DMA Channel BW/QoS_Type/DueDate Setting** **02208020**

Bit	31	30	29	28	27	26	25	24	23	22	21	20	19	18	17	16
Name	ag_wr	ag_sel			RSV0		ag_qos_type		ag_duedate							
Type	W1C	RW			RO		RW		RW							
Reset	0	0	0	0	0	0	1	0	0	0	1	0	0	0	0	0
Bit	15	14	13	12	11	10	9	8	7	6	5	4	3	2	1	0
Name	ag_pir								ag_cir							
Type	RW								RW							
Reset	1	0	0	0	0	0	0	0	0	0	1	0	0	0	0	0

Bit(s)	Name	Description
31	ag_wr	**Agent Write** 0: Read 1: Write
30:28	ag_sel	**DMA Agent Select** Selects a DMA agent to configure. 0: SDXC 1: GDMA 2: SPI Slave/3-Wire SPI Slave/PUTIF 3: Switch 4: WLAN 5: PCIe 6: AES 7: USB20
27:26	RSV0	**Reserved**
25:24	ag_qos_type	**Agent QoS Type** 0: Latency critical 1: Latency sensitive 2: Bandwidth sensitive (default) 3: Best Effort
23:16	ag_duedate	**Due date for latency critical agent** (unit: system bus clock cycle - system bus is 300 MHz or 225 MHz depending on bootstrap value.)
15:8	ag_pir	**Peak Information Rate for the Agent** The PIR is greater than or equal to the CIR. Bandwidth which exceeds PIR is marked red. 0x00: 0 MB/s 0x01: 4 MB/s ... 0x80: 512 MB/s (default) ... 0xFF: 1020 MB/s (Max)
7:0	ag_cir	**Committed Information Rate for the Agent** Bandwidth which falls below the CIR is marked green. BW which exceeds the CIR but is below the EIR is marked yellow.

MEDIATEK CONFIDENTIAL
FOR farrwang@symnex.com.tw USE ONLY

This document contains information that is proprietary to MediaTek Inc.
Unauthorized reproduction or disclosure of this information in whole or in part is strictly prohibited.

Bit(s)	Name	Description
		0x00: 0 MB/s 0x01: 4 MB/s ... 0x20: 128 MB/s (default) ... 0xFF: 1020 MB/s (Max)

1000040C **DMA_ROUTE** **DMA Routing** **00000000**

Bit	31	30	29	28	27	26	25	24	23	22	21	20	19	18	17	16
Name	RSV0[30:15]															
Type	RO															
Reset	0	0	0	0	0	0	0	0	0	0	0	0	0	0	0	0
Bit	15	14	13	12	11	10	9	8	7	6	5	4	3	2	1	0
Name	RSV0[14:0]															dma_route
Type	RO															RW
Reset	0	0	0	0	0	0	0	0	0	0	0	0	0	0	0	0

Bit(s)	Name	Description
31:1	RSV0	**Reserved**
0	dma_route	**DMA routing** 0: DMA will access to DRAM 1: DMA will access to CSR

10000410 **DMA_MON_AG_SEL** **DMA Monitor Agent Select** **00000000**

Bit	31	30	29	28	27	26	25	24	23	22	21	20	19	18	17	16
Name	RSV0[28:13]															
Type	RO															
Reset	0	0	0	0	0	0	0	0	0	0	0	0	0	0	0	0
Bit	15	14	13	12	11	10	9	8	7	6	5	4	3	2	1	0
Name	RSV0[12:0]													dma_sel		
Type	RO													RW		
Reset	0	0	0	0	0	0	0	0	0	0	0	0	0	0	0	0

Bit(s)	Name	Description
31:3	RSV0	**Reserved**
2:0	dma_sel	**DMA Monitor Agent Select** Selects a DMA agent to dump DMA_STATE, DMA_BW and DMA_LAT's content. 0: SDXC 1: GDMA 2: SPI Slave/3-Wire SPI Slave/PUTIF 3: Switch 4: WLAN 5: PCIe 6: AES 7: USB20

MEDIATEK CONFIDENTIAL
FOR farrwang@synnex.com.tw USE ONLY

© 2014 MediaTek Inc.
This document contains information that is proprietary to MediaTek Inc.
Unauthorized reproduction or disclosure of this information in whole or in part is strictly prohibited.

10000414 DMA_STATE DMA State

00000000

Bit	31	30	29	28	27	26	25	24	23	22	21	20	19	18	17	16
Name	RSV0[20:5]															
Type	RO															
Reset	0	0	0	0	0	0	0	0	0	0	0	0	0	0	0	0
Bit	15	14	13	12	11	10	9	8	7	6	5	4	3	2	1	0
Name	RSV0[4:0]					dma_rw	dma_state		dma_length							
Type	RO					RO	RO		RO							
Reset	0	0	0	0	0	0	0	0	0	0	0	0	0	0	0	0

Bit(s)	Name	Description
31:11	RSV0	**Reserved**
10	dma_rw	**DMA channel RW state**
9:8	dma_state	**DMA channel State** 2'b00: IDLE 2'b01: REQ 2'b10: ACK 2'b11: DATA
7:0	dma_length	**DMA channel burst length (Byte) state**

10000418 DMA_BW DMA Bandwidth

00000000

Bit	31	30	29	28	27	26	25	24	23	22	21	20	19	18	17	16
Name	bw_rst	RSV0	avg_bw										peak_bw[9:6]			
Type	WO	RO	RO										RO			
Reset	0	0	0	0	0	0	0	0	0	0	0	0	0	0	0	0
Bit	15	14	13	12	11	10	9	8	7	6	5	4	3	2	1	0
Name	peak_bw[5:0]						dma_bw									
Type	RO						RO									
Reset	0	0	0	0	0	0	0	0	0	0	0	0	0	0	0	0

Bit(s)	Name	Description
31	bw_rst	**Write 1 will reset BW values.**
30	RSV0	**Reserved**
29:20	avg_bw	**Average BW (MB/S)**
19:10	peak_bw	**Peak BW (MB/S)**
9:0	dma_bw	**DMA channel BW (MB/S)**

1000041C DMA_LAT DMA Latency

00000000

Bit	31	30	29	28	27	26	25	24	23	22	21	20	19	18	17	16
Name	lat_rst	RSV0	avg_lat										peak_lat[9:6]			
Type	WO	RO	RO										RO			
Reset	0	0	0	0	0	0	0	0	0	0	0	0	0	0	0	0
Bit	15	14	13	12	11	10	9	8	7	6	5	4	3	2	1	0
Name	peak_lat[5:0]						rd_lat									
Type	RO						RO									

MEDIATEK CONFIDENTIAL
FOR TEST USE ONLY
kwang@symtex.com.tw

© 2014 MediaTek Inc.
This document contains information that is proprietary to MediaTek Inc.
Unauthorized reproduction or disclosure of this information in whole or in part is strictly prohibited.

Reset	0	0	0	0	0	0	0	0	0	0	0	0	0	0	0	0

Bit(s)	Name	Description
31	lat_rst	**Write 1 will reset latency values**
30	RSV0	**Reserved**
29:20	avg_lat	**Average read latency (T)**
19:10	peak_lat	**Peak read latency (T)**
9:0	rd_lat	**DMA channel read latency (T)**

10000420 **OCP_CFG0** **OCP to Rbus configuration** **00000001**

Bit	31	30	29	28	27	26	25	24	23	22	21	20	19	18	17	16
Name	RSV0[27:12]															
Type	RO															
Reset	0	0	0	0	0	0	0	0	0	0	0	0	0	0	0	0
Bit	15	14	13	12	11	10	9	8	7	6	5	4	3	2	1	0
Name	RSV0[11:0]												sync_method	ocp_sync_cmd	rbus_async	rd_bypass_wr
Type	RO												RW	RW	RW	RW
Reset	0	0	0	0	0	0	0	0	0	0	0	0	0	0	0	1

Bit(s)	Name	Description
31:4	RSV0	**Reserved**
3	sync_method	**OCP Synchronization Command Method** 0: All empty (Wait until all FIFOs are empty) 1: CMD empty (Wait until the CMD FIFO is empty)
2	ocp_sync_cmd	**OCP Synchronization Command Method Enable** Remaps this RD CMD to address 0x0000_0000. Initiate DRAM control before enabling this option. 0: Disable 1: Enable
1	rbus_async	**Async Mode for RBUS** 0: Set HW to switch between sync or async mode dynamically. 1: Force RBUS to A.sync mode.
0	rd_bypass_wr	**Read Bypass Write Enable** Allows read commands to bypass write commands for OCP_IF when the address does not conflict. 0: Disable 1: Enable

10000424 **OCP_CFG1** **Read bypass write mask** **FFFFFFFF**

Bit	31	30	29	28	27	26	25	24	23	22	21	20	19	18	17	16
Name	rd_bypass_wr_mask[31:16]															
Type	RW															
Reset	1	1	1	1	1	1	1	1	1	1	1	1	1	1	1	1
Bit	15	14	13	12	11	10	9	8	7	6	5	4	3	2	1	0
Name	rd_bypass_wr_mask[15:0]															
Type	RW															
Reset	1	1	1	1	1	1	1	1	1	1	1	1	1	1	1	1

MEDIATEK CONFIDENTIAL
FOR Cartwang@synnex.com.tw USE ONLY

This document contains information that is proprietary to MediaTek Inc.
Unauthorized reproduction or disclosure of this information in whole or in part is strictly prohibited.

Bit(s)	Name	Description
31:0	rd_bypass_wr_mask	**Mask bit for read bypass write address**

10000430 **R2P_MONITOR** **Rbus to APbus monitor** **00000000**

Bit	31	30	29	28	27	26	25	24	23	22	21	20	19	18	17	16
Name	RSV0															r2p_inc_clr
Type	RO															W1C
Reset	0	0	0	0	0	0	0	0	0	0	0	0	0	0	0	0
Bit	15	14	13	12	11	10	9	8	7	6	5	4	3	2	1	0
Name	r2p_err_cnt						r2p_inc_cnt									
Type	RO						RW									
Reset	0	0	0	0	0	0	0	0	0	0	0	0	0	0	0	0

Bit(s)	Name	Description
31:17	RSV0	**Reserved**
16	r2p_inc_clr	**R2APB Interrupt Clear** Write 1 to clear this interrupt.
15:10	r2p_err_cnt	**R2APB error counter**
9:0	r2p_inc_cnt	**R2APB Interrupt Countdown Timer** Sets a delay timer which begins counting down when an R2P error is detected. When the timer reaches zero the R2P interrupt is then triggered. 10'b0000000000: Disable R2P monitoring 10'b0000000001: 20 us 10'b0000000010: 40 us ... 10'b1000000000: 40 ms

10000434 **R2P_ERR_ADDR** **Rbus to APbus error address** **00000000**

Bit	31	30	29	28	27	26	25	24	23	22	21	20	19	18	17	16
Name	r2p_err_addr[31:16]															
Type	RO															
Reset	0	0	0	0	0	0	0	0	0	0	0	0	0	0	0	0
Bit	15	14	13	12	11	10	9	8	7	6	5	4	3	2	1	0
Name	r2p_err_addr[15:0]															
Type	RO															
Reset	0	0	0	0	0	0	0	0	0	0	0	0	0	0	0	0

Bit(s)	Name	Description
31:0	r2p_err_addr	**R2APB address record for previous error found**

10000440 **DYN_CFG0** **Dynamic cpu/ocp frequency control** **00030A01**

Bit	31	30	29	28	27	26	25	24	23	22	21	20	19	18	17	16

MEDIATEK CONFIDENTIAL
FOR fanrwang@sina.com.cn USE ONLY

This document contains information that is proprietary to MediaTek Inc.
Unauthorized reproduction or disclosure of this information in whole or in part is strictly prohibited.

Name	RSV0													cpu_ocp_ratio		
Type	RO													RW		
Reset	0	0	0	0	0	0	0	0	0	0	0	0	0	0	1	1
Bit	15	14	13	12	11	10	9	8	7	6	5	4	3	2	1	0
Name	RSV1				cpu_fdiv				RSV2				cpu_ffrac			
Type	RO				RW				RO				RW			
Reset	0	0	0	0	1	0	1	0	0	0	0	0	0	0	0	1

Bit(s)	Name	Description
31:19	RSV0	**Reserved**
18:16	cpu_ocp_ratio	**CPU OCP Ratio** The ratio between the system bus frequency and the CPU frequency. 3'b011: SYS/CPU = 1/3 3'b100: SYS/CPU = 1/4 (Not used in MT7628)
15:12	RSV1	**Reserved**
11:8	cpu_fdiv	**CPU Frequency Divider** The frequency divider is used to generate the CPU frequency. Valid values range from 1 to 15. NOTE1: CPU_FDIV must be equaled to N*CPU_FFRAC(N is a integer number) when rbus_async equal to 1'b0. NOTE2: CPU_FDIV must be larger than or equal to CPU_FFRAC when rbus_async equal to 1'b1.
7:4	RSV2	**Reserved**
3:0	cpu_ffrac	**CPU Frequency Fractional** A parameter used in conjunction with the CPU frequency divider to determine the CPU frequency. Input a value in the following equation to determine the CPU frequency. CPU frequency = PLL_FREQ*(CPU_FFRAC/CPU_FDIV) NOTE: If the chip runs in USB OHCI mode, the OCP frequency cannot be lower than 30 MHz. It means that PLL_FREQ*(CPU_FFRAC/CPU_FDIV)/CPU_OCP_RATIO >= 30 MHz.

10000444 DYN_CFG1 CPU sleep step frequency control 00230A06

Bit	31	30	29	28	27	26	25	24	23	22	21	20	19	18	17	16
Name	slp_en	step_en	RSV0		step_cnt								RSV1	step_ocp_ratio		
Type	RW	RW	RO		RW								RO	RO		
Reset	0	0	0	0	0	0	0	0	0	0	1	0	0	0	1	1
Bit	15	14	13	12	11	10	9	8	7	6	5	4	3	2	1	0
Name	RSV2				step_fdiv				RSV3				step_ffrac			
Type	RO				RO				RO				RW			
Reset	0	0	0	0	1	0	1	0	0	0	0	0	0	1	1	0

Bit(s)	Name	Description
31	slp_en	**Sleep Mode Enable** Enables sleep mode when MIPS SI_Sleep is asserted. 0: Disable 1: Enable Sleep Mode CPU Frequency = PLL_FREQ*(1/CPU_FDIV)
30	step_en	**Step Jump Enable** Enables step jump after MIPS exits sleep mode. The CPU will jump to the normal frequency in increments defined by STEP_FFRAC.bit[4:0] of this register. 0: Disable

MEDIATEK CONFIDENTIAL
FOR farrwang@synnex.com.tw USE ONLY

This document contains information that is proprietary to MediaTek Inc.
Unauthorized reproduction or disclosure of this information in whole or in part is strictly prohibited.

Bit(s)	Name	Description
		1: Enable
29:28	RSV0	**Reserved**
27:20	step_cnt	**Step Counter** Sets the period of each step jump. When the counter counts down to zero, the CPU clock automatically changes to the next step frequency. The count period unit is 1 us.
19	RSV1	**Reserved**
18:16	step_ocp_ratio	**Step OCP Ratio (Fix to cpu_ocp_ratio)** The ratio between the system bus frequency and the CPU frequency. 3'b011: SYS/CPU = 1/3 3'b100: SYS/CPU = 1/4 (Not used in MT7628)
15:12	RSV2	**Reserved**
11:8	step_fdiv	**Step Frequency Divider (Fix to CPU_FDIV)** The frequency divider is used to generate the CPU frequency after the CPU exits from sleep mode and returns to normal operation. Valid values range from 1 to 15.
7:4	RSV3	**Reserved**
3:0	step_ffrac	**Step Frequency Fraction** The fractional size of the increment in CPU frequency after the CPU exits from sleep mode and returns to normal operation. This step is only valid when SLP_STEP_EN is enabled. FRAC_VALUE = PREVIOUS_FRAC_VALUE + STEP_FFRAC CPU Frequency = (FRAC_VALUE/CPU_FDIV)*PLL_FREQ

10000448 **DYN_CFG2** **Dyn CFG Probe** **00030A01**

Bit	31	30	29	28	27	26	25	24	23	22	21	20	19	18	17	16
Name	RSV0					dfc_fsm			RSV1			same_freq	RSV2	cpu_ocp_ratio		
Type	RO					RO			RO			RO	RO	RO		
Reset	0	0	0	0	0	0	0	0	0	0	0	0	0	0	1	1
Bit	15	14	13	12	11	10	9	8	7	6	5	4	3	2	1	0
Name	RSV3				cpu_fdiv				RSV4				cpu_ffrac			
Type	RO				RO				RO				RO			
Reset	0	0	0	0	1	0	1	0	0	0	0	0	0	0	0	1

Bit(s)	Name	Description
31:27	RSV0	**Dynamic frequency controller's main FSM current state**
26:24	dfc_fsm	**Dynamic frequency controller's main FSM current state**
23:21	RSV1	**Reserved**
20	same_freq	**Indicates that the SYS and DRAM clocks are on the same frequency.**
19	RSV2	**Reserved**
18:16	cpu_ocp_ratio	**OCP ratio after changed frequency**
15:12	RSV3	**Reserved**
11:8	cpu_fdiv	**CPU fdiv after changed frequency**
7:4	RSV4	**Reserved**
3:0	cpu_ffrac	**CPU ffrac after changed frequency**

MEDIATEK CONFIDENTIAL
FOR farwang@symnex.com.tw USE ONLY

© 2014 MediaTek Inc.
This document contains information that is proprietary to MediaTek Inc.
Unauthorized reproduction or disclosure of this information in whole or in part is strictly prohibited.

1000044C DYN_CFG3 SI_Sleep Serial Counter Setting 00000000

Bit	31	30	29	28	27	26	25	24	23	22	21	20	19	18	17	16
Name	si_slp_cnt_en	RSV0			si_slp_time_unit[27:16]											
Type	RW	RO			RW											
Reset	0	0	0	0	0	0	0	0	0	0	0	0	0	0	0	0
Bit	15	14	13	12	11	10	9	8	7	6	5	4	3	2	1	0
Name	si_slp_time_unit[15:0]															
Type	RW															
Reset	0	0	0	0	0	0	0	0	0	0	0	0	0	0	0	0

Bit(s)	Name	Description
31	si_slp_cnt_en	**SI_Sleep Serial Counter Enable**
30:28	RSV0	**Reserved**
27:0	si_slp_time_unit	**SI_Sleep Time Counter unit** 28'h0000000: count per 1us 28'h0000001: count per 2us 28'h0000002: count per 3us ... 28'hffffffff: count per 268435456us

10000450 DYN_CFG4 SI_Sleep Issue Count Counter 00000000

Bit	31	30	29	28	27	26	25	24	23	22	21	20	19	18	17	16
Name	si_slp_cnt[31:16]															
Type	W1C															
Reset	0	0	0	0	0	0	0	0	0	0	0	0	0	0	0	0
Bit	15	14	13	12	11	10	9	8	7	6	5	4	3	2	1	0
Name	si_slp_cnt[15:0]															
Type	W1C															
Reset	0	0	0	0	0	0	0	0	0	0	0	0	0	0	0	0

Bit(s)	Name	Description
31:0	si_slp_cnt	**SI_Sleep Issue Count Counter** Write to this register will clear the counter value.

10000454 DYN_CFG5 Sleep Time Counter for SI_Sleep 00000000

Bit	31	30	29	28	27	26	25	24	23	22	21	20	19	18	17	16
Name	si_slp_time_unit_cnt[31:16]															
Type	W1C															
Reset	0	0	0	0	0	0	0	0	0	0	0	0	0	0	0	0
Bit	15	14	13	12	11	10	9	8	7	6	5	4	3	2	1	0
Name	si_slp_time_unit_cnt[15:0]															
Type	W1C															
Reset	0	0	0	0	0	0	0	0	0	0	0	0	0	0	0	0

Bit(s)	Name	Description
31:0	si_slp_time_unit_cnt	**Sleep Time Counter for SI_Sleep** Finally, CPU in SI_Sleep time is "si_slp_time_unit_cnt*si_slp_time_unit(us)".

MEDIATEK CONFIDENTIAL
FOR fariwang@synex.com.tw USE ONLY

This document contains information that is proprietary to MediaTek Inc.
Unauthorized reproduction or disclosure of this information in whole or in part is strictly prohibited.

Bit(s)	Name	Description
		Write to this register will clear the counter value.

10000458 **DYN_CFG6** **Operation Time Counter for non SI_Sleep** **00000000**

Bit	31	30	29	28	27	26	25	24	23	22	21	20	19	18	17	16
Name	si_opt_time_unit_cnt[31:16]															
Type	W1C															
Reset	0	0	0	0	0	0	0	0	0	0	0	0	0	0	0	0
Bit	15	14	13	12	11	10	9	8	7	6	5	4	3	2	1	0
Name	si_opt_time_unit_cnt[15:0]															
Type	W1C															
Reset	0	0	0	0	0	0	0	0	0	0	0	0	0	0	0	0

Bit(s)	Name	Description
31:0	si_opt_time_unit_cnt	**Operation Time Counter for non SI_Sleep** Finally, CPU in non SI_Sleep time is "si_opt_time_unit_cnt*si_slp_time_unit(us)". Write to this register will clear the counter value.

MEDIATEK CONFIDENTIAL
FOR farrwang@ synnex.com.tw USE ONLY

This document contains information that is proprietary to MediaTek Inc.
Unauthorized reproduction or disclosure of this information in whole or in part is strictly prohibited.

2.7 MIPS CNT

2.7.1 Registers

MIPS_CNT Changes LOG

Revision	Date	Author	Change Log
0.1	2013/1/14	YuShu Xiao	Initialization

Module name: MIPS_CNT Base address: (+10000500h)

Address	Name	Width	Register Function
10000500	STCK_CNT_CFG	32	**MIPS Configuration**
10000504	CMP_CNT	32	**MIPS Compare** Sets the cutoff point for the free run counter (MIPS counter). If the free run counter equals the compare counter, then the timer circuit generates an interrupt. The interrupt remains active until the compare counter is written again.
10000508	CNT	32	**MIPS Counter** The MIPS counter (free run counter) increases by 1 every 20 us (50 KHz). The counter continues to count until it reaches the value loaded into CMP_CNT.

10000500 STCK_CNT_CFG MIPS Configuration 00000000

Bit	31	30	29	28	27	26	25	24	23	22	21	20	19	18	17	16
Name	RESV[29:14]															
Type	RO															
Reset	0	0	0	0	0	0	0	0	0	0	0	0	0	0	0	0
Bit	15	14	13	12	11	10	9	8	7	6	5	4	3	2	1	0
Name	RESV[13:0]														EXT_STK_EN	CNT_EN
Type	RO														RW	RW
Reset	0	0	0	0	0	0	0	0	0	0	0	0	0	0	0	0

Bit(s)	Name	Description
31:2	RESV	
1	EXT_STK_EN	**External System Tick Enable - Selects the system tick source.** 0: Use the MIPS internal timer interrupts. 1: Use the external timer interrupt from an external MIPS counter.
0	CNT_EN	**Counter Enable - Enable the free run counter (MIPS counter).** 0: Disable 1: Enable

10000504 CMP_CNT MIPS Compare 00000000

Bit	31	30	29	28	27	26	25	24	23	22	21	20	19	18	17	16
Name	RESV															

MEDIATEK CONFIDENTIAL
FOR farrwang@synrex.com.tw USE ONLY

This document contains information that is proprietary to MediaTek Inc.
Unauthorized reproduction or disclosure of this information in whole or in part is strictly prohibited.

Type	RO															
Reset	0	0	0	0	0	0	0	0	0	0	0	0	0	0	0	0
Bit	15	14	13	12	11	10	9	8	7	6	5	4	3	2	1	0
Name	**CMP_CNT**															
Type	RW															
Reset	0	0	0	0	0	0	0	0	0	0	0	0	0	0	0	0

Bit(s)	Name	Description
31:16	RESV	
15:0	CMP_CNT	**Compare Count**

10000508 **CNT** **MIPS Counter** **00000000**

Bit	31	30	29	28	27	26	25	24	23	22	21	20	19	18	17	16
Name	**RESV**															
Type	RO															
Reset	0	0	0	0	0	0	0	0	0	0	0	0	0	0	0	0
Bit	15	14	13	12	11	10	9	8	7	6	5	4	3	2	1	0
Name	**CNT**															
Type	RW															
Reset	0	0	0	0	0	0	0	0	0	0	0	0	0	0	0	0

Bit(s)	Name	Description
31:16	RESV	
15:0	CNT	**MIPS Counter**

MEDIATEK CONFIDENTIAL
FOR farrwang@ synnex.com.tw USE ONLY

This document contains information that is proprietary to MediaTek Inc.
Unauthorized reproduction or disclosure of this information in whole or in part is strictly prohibited.

2.8 General Purpose IO

2.8.1 Features

- Parameterized numbers of independent inputs, outputs, and inouts
- Independent polarity controls for each pin
- Independently masked edge detect interrupt on any input transition

2.8.2 Block Diagram

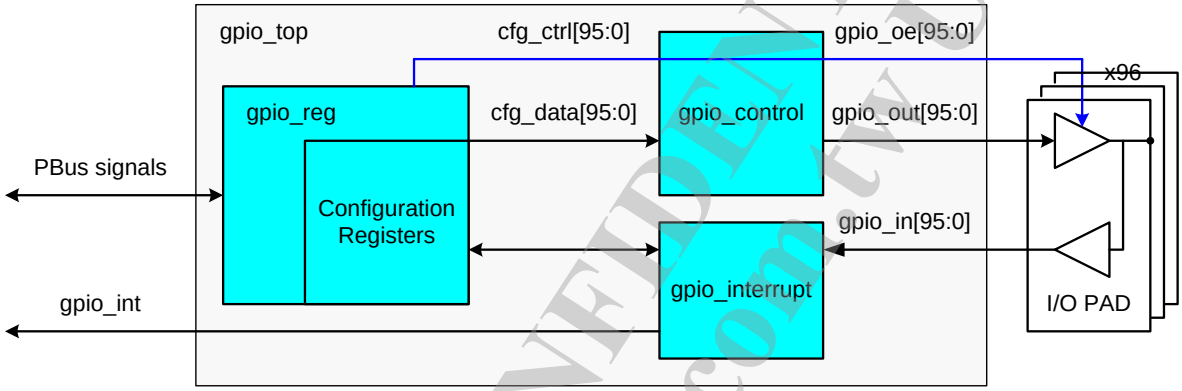

Figure 2-4 Programmable I/O Block Diagram

MEDIATEK CONFIDENTIAL
FOR farrwang@ synnex.com.tw USE ONLY

This document contains information that is proprietary to MediaTek Inc.
Unauthorized reproduction or disclosure of this information in whole or in part is strictly prohibited.

2.8.3 GPIO pin mapping

PAD Name	Function 0	Function 1	Function 2	Function 3	strap	pmux_group	GPIO
PAD_I2S_SDI	i2ssdi (I)	gpio (I/O)	pcmdrx (I)	antsel[5] (O)		i2s_gpio_psel[2:0]	0
PAD_I2S_SDO	i2ssdo (O)	gpio (I/O)	pcmdtx (O)	antsel[4] (O)	0	i2s_gpio_psel[2:0]	1
PAD_I2S_WS	i2sws(I/O)	gpio (I/O)	pcmclk (I/O)	antsel[3] (O)		i2s_gpio_psel[2:0]	2
PAD_I2S_CLK	i2sclk (I/O)	gpio (I/O)	pcmfs (I/O)	antsel[2] (O)		i2s_gpio_psel[2:0]	3
PAD_I2C_SCLK	i2c_sclk (I/O)	gpio (I/O)	sutif_txd (O)	ext_bgclk (I)		i2c_gpio_psel[2:0]	4
PAD_I2C_SD	i2c_sd (I/O)	gpio (I/O)	sutif_rxd (I)			i2c_gpio_psel[2:0]	5
PAD_SPI_CS1	spi_cs1 (O)	gpio (I/O)	co_clko (O)		1	spi_cs1_psel[2:0]	6
PAD_SPI_CLK	spi_clk (O)	gpio (I/O)			2	spi_gpio_psel[1:0]	7
PAD_SPI_MOSI	spi_mosi (I/O)	gpio (I/O)			3	spi_gpio_psel[1:0]	8
PAD_SPI_MISO	spi_miso (I/O)	gpio (I/O)				spi_gpio_psel[1:0]	9
PAD_SPI_CS0	spi_cs0 (O)	gpio (I/O)				spi_gpio_psel[1:0]	10
PAD_GPIO0	gpio (I/O)	gpio (I/O)	co_clko (O)	perst_n (O)	4	gpio_psel[2:0]	11
PAD_TXD0	txd0 (O)	gpio (I/O)			5	uart0_gpio_psel[2:0]	12
PAD_RXD0	rxd0 (I)	gpio (I/O)				uart0_gpio_psel[2:0]	13
PAD_MDI_TP_P1	spis_cs (I)	gpio (I/O)	w_utif[0] (I/O)	pwm_ch0 (O)		spis_gpio_psel[2:0]	14
PAD_MDI_TN_P1	spis_clk (I)	gpio (I/O)	w_utif[1] (I/O)	pwm_ch1 (O)		spis_gpio_psel[2:0]	15
PAD_MDI_RP_P1	spis_miso (O)	gpio (I/O)	w_utif[2] (I/O)	txd2 (O)		spis_gpio_psel[2:0]	16
PAD_MDI_RN_P1	spis_mosi (I)	gpio (I/O)	w_utif[3] (I/O)	rxd2 (I)		spis_gpio_psel[2:0]	17
PAD_MDI_RP_P2	pwm_ch0 (O)	gpio (I/O)	w_utif[4] (I/O)	sd_d7 (I/O)		pwm0_gpio_psel[2:0]	18
PAD_MDI_RN_P2	pwm_ch1 (O)	gpio (I/O)	w_utif[5] (I/O)	sd_d6 (I/O)		pwm1_gpio_psel[2:0]	19
PAD_MDI_TP_P2	txd2 (O)	gpio (I/O)	pwm_ch2 (O)	sd_d5 (I/O)		uart2_gpio_psel[2:0]	20
PAD_MDI_TN_P2	rxd2 (I)	gpio (I/O)	pwm_ch3 (O)	sd_d4 (I/O)		uart2_gpio_psel[2:0]	21
PAD_MDI_TP_P3	sd_wp (I)	gpio (I/O)	w_utif[10] (I/O)	w_dbgin (I)		sd_gpio_psel[2:0]	22
PAD_MDI_TN_P3	sd_cd (I)	gpio (I/O)	w_utif[11] (I/O)	w_dbgack (O)		sd_gpio_psel[2:0]	23
PAD_MDI_RP_P3	sd_d1 (I/O)	gpio (I/O)	w_utif[12] (I/O)	w_jtclk (I)		sd_gpio_psel[2:0]	24
PAD_MDI_RN_P3	sd_d0 (I/O)	gpio (I/O)	w_utif[13] (I/O)	w_jtdi (I)		sd_gpio_psel[2:0]	25
PAD_MDI_RP_P4	sd_clk (I/O)	gpio (I/O)	w_utif[14] (I/O)	w_jtdo (O)		sd_gpio_psel[2:0]	26
PAD_MDI_RN_P4	sd_cmd (I/O)	gpio (I/O)	w_utif[15] (I/O)	dbg_uart_txd (O)		sd_gpio_psel[2:0]	27
PAD_MDI_TP_P4	sd_d3 (I/O)	gpio (I/O)	w_utif[16] (I/O)	w_jtms (I)		sd_gpio_psel[2:0]	28
PAD_MDI_TN_P4	sd_d2 (I/O)	gpio (I/O)	w_utif[17] (I/O)	w_jtrst_n (I)		sd_gpio_psel[2:0]	29
PAD_EPHY_LED4_K	ephy_led4_k (O)	gpio (I/O)	w_utif_k[6] (I/O)	jtrstn_k (I)		p4_led_kn_psel[2:0]	30
PAD_EPHY_LED3_K	ephy_led3_k (O)	gpio (I/O)	w_utif_k[7] (I/O)	jtclk_k (I)		p3_led_kn_psel[2:0]	31
PAD_EPHY_LED2_K	ephy_led2_k (O)	gpio (I/O)	w_utif_k[8] (I/O)	jtms_k (I)		p2_led_kn_psel[2:0]	32
PAD_EPHY_LED1_K	ephy_led1_k (O)	gpio (I/O)	w_utif_k[9] (I/O)	jtdi_k (I)		p1_led_kn_psel[2:0]	33
PAD_EPHY_LED0_K	ephy_led0_k (O)	gpio (I/O)		jtdo_k (I/O)		p0_led_kn_psel[2:0]	34
PAD_WLED_K	wled_k (I/O)	gpio (I/O)				wled_kn_psel[2:0]	35
PAD_PERST_N	perst_n (O)	gpio (I/O)			6	prest_gpio_psel[1:0]	36
PAD_CO_CLKO	co_clko (O)	gpio (I/O)			7	rclk_gpio_psel[1:0]	37
PAD_WDT_RST_N	wdt (I/O)	gpio (I/O)				wdt_gpio_psel[1:0]	38
PAD_EPHY_LED4_N	ephy_led4_n (O)	gpio (I/O)	w_utif_n[6] (I/O)	jtrstn_n (I)		p4_led_gpio_psel[2:0]	39
PAD_EPHY_LED3_N	ephy_led3_n (O)	gpio (I/O)	w_utif_n[7] (I/O)	jtclk_n (I)		p3_led_gpio_psel[2:0]	40
PAD_EPHY_LED2_N	ephy_led2_n (O)	gpio (I/O)	w_utif_n[8] (I/O)	jtms_n (I)		p2_led_gpio_psel[2:0]	41
PAD_EPHY_LED1_N	ephy_led1_n (O)	gpio (I/O)	w_utif_n[9] (I/O)	jtdi_n (I)		p1_led_gpio_psel[2:0]	42
PAD_EPHY_LED0_N	ephy_led0_n (O)	gpio (I/O)		jtdo_n (I/O)		p0_led_gpio_psel[2:0]	43
PAD_WLED_N	wled_n (I/O)	gpio (I/O)				wled_gpio_psel[2:0]	44
PAD_TXD1	txd1 (O)	gpio (I/O)	pwm_ch0 (O)	antsel[1] (O)	8	uart1_gpio_psel[2:0]	45
PAD_RXD1	rxd1 (I)	gpio (I/O)	pwm_ch1 (O)	antsel[0] (O)		uart1_gpio_psel[2:0]	46

2.8.4 Register

FOR fanwang@mxcomm.com.tw USE ONLY
MEDIATEK CONFIDENTIAL

This document contains information that is proprietary to MediaTek Inc.
Unauthorized reproduction or disclosure of this information in whole or in part is strictly prohibited.

GPIO Changes LOG

Revision	Date	Author	Change Log
0.1	2012/6/21	YuShu Xiao	Initialization

Module name: GPIO Base address: (+10000600h)

Address	Name	Width	Register Function
10000600	GPIO_CTRL_0	32	**GPIO0 to GPIO31 direction control register** These direction control registers are used to select the data direction of the GPIO pin. The value driven onto the GPIO pins, are controlled by the GPIO_POL_x, and GPIO_DATA_x registers.
10000604	GPIO_CTRL_1	32	**GPIO32 to GPIO63 direction control register** These direction control registers are used to select the data direction of the GPIO pin. The value driven onto the GPIO pins, are controlled by the GPIO_POL_x, and GPIO_DATA_x registers.
10000608	GPIO_CTRL_2	32	**GPIO64 to GPIO95 direction control register** These direction control registers are used to select the data direction of the GPIO pin. The value driven onto the GPIO pins, are controlled by the GPIO_POL_x, and GPIO_DATA_x registers.
10000610	GPIO_POL_0	32	**GPIO0 to GPIO31 polarity control register** These polarity control registers are used to control the polarity of the data is driven on or read from the GPIO pin.
10000614	GPIO_POL_1	32	**GPIO32 to GPIO63 polarity control register** These polarity control registers are used to control the polarity of the data is driven on or read from the GPIO pin.
10000618	GPIO_POL_2	32	**GPIO64 to GPIO95 polarity control register** These polarity control registers are used to control the polarity of the data is driven on or read from the GPIO pin.
10000620	GPIO_DATA_0	32	**GPIO0 to GPIO31 data register** These data registers store current GPIO data value for GPIO input mode, or output driven value for GPIO output mode. Bit position stand for correspondent GPIO pin.
10000624	GPIO_DATA_1	32	**GPIO32 to GPIO63 data register** These data registers store current GPIO data value for GPIO input mode, or output driven value for GPIO output mode. Bit position stand for correspondent GPIO pin.
10000628	GPIO_DATA_2	32	**GPIO64 to GPIO95 data register** These data registers store current GPIO data value for GPIO input mode, or output driven value for GPIO output mode. Bit position stand for correspondent GPIO pin.
10000630	GPIO_DSET_0	32	**GPIO0 to GPIO31 data set register** These data set registers are used to set bits in the GPIO_DATA_x registers.
10000634	GPIO_DSET_1	32	**GPIO32 to GPIO63 data set register** These data set registers are used to set bits in the GPIO_DATA_x registers.
10000638	GPIO_DSET_2	32	**GPIO64 to GPIO95 data set register** These data set registers are used to set bits in the GPIO_DATA_x registers.
10000640	GPIO_DCLR_0	32	**GPIO0 to GPIO31 data clear register** These data set registers are used to clear bits in the GPIO_DATA_x registers.
10000644	GPIO_DCLR_1	32	**GPIO32 to GPIO63 data clear register**

MEDIATEK CONFIDENTIAL
FOR farrwang@sinetech.com.tw USE ONLY

This document contains information that is proprietary to MediaTek Inc.
Unauthorized reproduction or disclosure of this information in whole or in part is strictly prohibited.

			These data set registers are used to clear bits in the GPIO_DATA_x registers.
10000648	GPIO_DCLR_2	32	**GPIO64 to GPIO95 data clear register** These data set registers are used to clear bits in the GPIO_DATA_x registers.
10000650	GINT_REDGE_0	32	**GPIO0 to GPIO31 rising edge interrupt enable register** These registers are used to enable the condition of rising edge triggered interrupt.
10000654	GINT_REDGE_1	32	**GPIO32 to GPIO63 rising edge interrupt enable register** These registers are used to enable the condition of rising edge triggered interrupt.
10000658	GINT_REDGE_2	32	**GPIO64 to GPIO95 rising edge interrupt enable register** These registers are used to enable the condition of rising edge triggered interrupt.
10000660	GINT_FEDGE_0	32	**GPIO0 to GPIO31 falling edge interrupt enable register** These registers are used to enable the condition of falling edge triggered interrupt.
10000664	GINT_FEDGE_1	32	**GPIO32 to GPIO63 falling edge interrupt enable register** These registers are used to enable the condition for falling edge triggered interrupt.
10000668	GINT_FEDGE_2	32	**GPIO64 to GPIO95 falling edge interrupt enable register** These registers are used to enable the condition of falling edge triggered interrupt.
10000670	GINT_HLVL_0	32	**GPIO0 to GPIO31 high level interrupt enable register** These registers are used to enable the condition of high level triggered interrupt. The bit in this register and the corresponded bit in GINT_LLVL_0 can not be set to 1 at the same time.
10000674	GINT_HLVL_1	32	**GPIO32 to GPIO63 high level interrupt enable register** These registers are used to enable the condition of high level triggered interrupt. The bit in this register and the corresponded bit in GINT_LLVL_1 can not be set to 1 at the same time.
10000678	GINT_HLVL_2	32	**GPIO64 to GPIO95 high level interrupt enable register** These registers are used to enable the condition of high level triggered interrupt. The bit in this register and the corresponded bit in GINT_LLVL_2 can not be set to 1 at the same time.
10000680	GINT_LLVL_0	32	**GPIO0 to GPIO31 low level interrupt enable register** These registers are used to enable the condition of low level triggered interrupt. The bit in this register and the corresponded bit in GINT_HLVL_0 can not be set to 1 at the same time.
10000684	GINT_LLVL_1	32	**GPIO32 to GPIO63 low level interrupt enable register** These registers are used to enable the condition of low level triggered interrupt. The bit in this register and the corresponded bit in GINT_HLVL_1 can not be set to 1 at the same time.
10000688	GINT_LLVL_2	32	**GPIO64 to GPIO95 low level interrupt enable register** These registers are used to enable the condition of low level triggered interrupt. The bit in this register and the corresponded bit in GINT_HLVL_2 can not be set to 1 at the same time.
10000690	GINT_STAT_0	32	**GPIO0 to GPIO31 interrupt status register** These registers are used to record the GPIO current interrupt status.
10000694	GINT_STAT_1	32	**GPIO32 to GPIO63 interrupt status register** These registers are used to record the GPIO current interrupt status.
10000698	GINT_STAT_2	32	**GPIO64 to GPIO95 interrupt status register**

MEDIATEK CONFIDENTIAL
FOR farrvang@sunecomm.com USE ONLY

© 2014 MediaTek Inc.

This document contains information that is proprietary to MediaTek Inc.
Unauthorized reproduction or disclosure of this information in whole or in part is strictly prohibited.

			These registers are used to record the GPIO current interrupt status.
100006A0	**GINT_EDGE_0**	32	**GPIO0 to GPIO31 edge status register** These registers are used to record the GPIO current interrupt's edge status. These registers are useful only in edge triggered interrupt.
100006A4	**GINT_EDGE_1**	32	**GPIO32 to GPIO63 edge status register** These registers are used to record the GPIO current interrupt's edge status. These registers are useful only in edge triggered interrupt.
100006A8	**GINT_EDGE_2**	32	**GPIO64 to GPIO95 edge status register** These registers are used to record the GPIO current interrupt's edge status. These registers are useful only in edge triggered interrupt.

10000600 GPIO_CTRL_0 GPIO0 to GPIO31 direction control register 00000000

Bit	31	30	29	28	27	26	25	24	23	22	21	20	19	18	17	16
Name	GPIOCTRL0[31:16]															
Type	RW															
Reset	0	0	0	0	0	0	0	0	0	0	0	0	0	0	0	0
Bit	15	14	13	12	11	10	9	8	7	6	5	4	3	2	1	0
Name	GPIOCTRL0[15:0]															
Type	RW															
Reset	0	0	0	0	0	0	0	0	0	0	0	0	0	0	0	0

Bit(s)	Name	Description
31:0	GPIOCTRL0	**GPIO Pin Direction** 0: GPIO input mode 1: GPIO output mode

10000604 GPIO_CTRL_1 GPIO32 to GPIO63 direction control register 00000000

Bit	31	30	29	28	27	26	25	24	23	22	21	20	19	18	17	16
Name	GPIOCTRL1[31:16]															
Type	RW															
Reset	0	0	0	0	0	0	0	0	0	0	0	0	0	0	0	0
Bit	15	14	13	12	11	10	9	8	7	6	5	4	3	2	1	0
Name	GPIOCTRL1[15:0]															
Type	RW															
Reset	0	0	0	0	0	0	0	0	0	0	0	0	0	0	0	0

Bit(s)	Name	Description
31:0	GPIOCTRL1	**GPIO Pin Direction** 0: GPIO input mode 1: GPIO output mode

10000608 GPIO_CTRL_2 GPIO64 to GPIO95 direction control register 00000000

Bit	31	30	29	28	27	26	25	24	23	22	21	20	19	18	17	16
Name	GPIOCTRL2[31:16]															
Type	RW															

MEDIATEK CONFIDENTIAL
FOR farrwang@symnex.com.tw USE ONLY

This document contains information that is proprietary to MediaTek Inc.
Unauthorized reproduction or disclosure of this information in whole or in part is strictly prohibited.

Reset	0	0	0	0	0	0	0	0	0	0	0	0	0	0	0	0
Bit	15	14	13	12	11	10	9	8	7	6	5	4	3	2	1	0
Name	**GPIOCTRL2[15:0]**															
Type	RW															
Reset	0	0	0	0	0	0	0	0	0	0	0	0	0	0	0	0

Bit(s)	Name	Description
31:0	GPIOCTRL2	**GPIO Pin Direction** 0: GPIO input mode 1: GPIO output mode

10000610 GPIO_POL_0 GPIO0 to GPIO31 polarity control register 00000000

Bit	31	30	29	28	27	26	25	24	23	22	21	20	19	18	17	16
Name	**GPIOPOL0[31:16]**															
Type	RW															
Reset	0	0	0	0	0	0	0	0	0	0	0	0	0	0	0	0
Bit	15	14	13	12	11	10	9	8	7	6	5	4	3	2	1	0
Name	**GPIOPOL0[15:0]**															
Type	RW															
Reset	0	0	0	0	0	0	0	0	0	0	0	0	0	0	0	0

Bit(s)	Name	Description
31:0	GPIOPOL0	**GPIO Data Polarity** 0: Data is non-inverted 1: Data is inverted

10000614 GPIO_POL_1 GPIO32 to GPIO63 polarity control register 00000000

Bit	31	30	29	28	27	26	25	24	23	22	21	20	19	18	17	16
Name	**GPIOPOL1[31:16]**															
Type	RW															
Reset	0	0	0	0	0	0	0	0	0	0	0	0	0	0	0	0
Bit	15	14	13	12	11	10	9	8	7	6	5	4	3	2	1	0
Name	**GPIOPOL1[15:0]**															
Type	RW															
Reset	0	0	0	0	0	0	0	0	0	0	0	0	0	0	0	0

Bit(s)	Name	Description
31:0	GPIOPOL1	**GPIO Data Polarity** 0: Data is non-inverted 1: Data is inverted

10000618 GPIO_POL_2 GPIO64 to GPIO95 polarity control register 00000000

Bit	31	30	29	28	27	26	25	24	23	22	21	20	19	18	17	16
Name	**GPIOPOL2[31:16]**															
Type	RW															
Reset	0	0	0	0	0	0	0	0	0	0	0	0	0	0	0	0
Bit	15	14	13	12	11	10	9	8	7	6	5	4	3	2	1	0
Name	**GPIOPOL2[15:0]**															
Type	RW															

MEDIATEK CONFIDENTIAL
FOR farrwang@synnex.com.tw USE ONLY

This document contains information that is proprietary to MediaTek Inc.
Unauthorized reproduction or disclosure of this information in whole or in part is strictly prohibited.

Reset	0	0	0	0	0	0	0	0	0	0	0	0	0	0	0	0

Bit(s)	Name	Description
31:0	GPIOPOL2	**GPIO Data Polarity** 0: Data is non-inverted 1: Data is inverted

10000620 **GPIO_DATA_0** **GPIO0 to GPIO31 data register** **00000000**

Bit	31	30	29	28	27	26	25	24	23	22	21	20	19	18	17	16
Name	GPIODATA0[31:16]															
Type	RW															
Reset	0	0	0	0	0	0	0	0	0	0	0	0	0	0	0	0
Bit	15	14	13	12	11	10	9	8	7	6	5	4	3	2	1	0
Name	GPIODATA0[15:0]															
Type	RW															
Reset	0	0	0	0	0	0	0	0	0	0	0	0	0	0	0	0

Bit(s)	Name	Description
31:0	GPIODATA0	**GPIO Data**

10000624 **GPIO_DATA_1** **GPIO32 to GPIO63 data register** **00000000**

Bit	31	30	29	28	27	26	25	24	23	22	21	20	19	18	17	16
Name	GPIODATA1[31:16]															
Type	RW															
Reset	0	0	0	0	0	0	0	0	0	0	0	0	0	0	0	0
Bit	15	14	13	12	11	10	9	8	7	6	5	4	3	2	1	0
Name	GPIODATA1[15:0]															
Type	RW															
Reset	0	0	0	0	0	0	0	0	0	0	0	0	0	0	0	0

Bit(s)	Name	Description
31:0	GPIODATA1	**GPIO Data**

10000628 **GPIO_DATA_2** **GPIO64 to GPIO95 data register** **00000000**

Bit	31	30	29	28	27	26	25	24	23	22	21	20	19	18	17	16
Name	GPIODATA2[31:16]															
Type	RW															
Reset	0	0	0	0	0	0	0	0	0	0	0	0	0	0	0	0
Bit	15	14	13	12	11	10	9	8	7	6	5	4	3	2	1	0
Name	GPIODATA2[15:0]															
Type	RW															
Reset	0	0	0	0	0	0	0	0	0	0	0	0	0	0	0	0

Bit(s)	Name	Description
31:0	GPIODATA2	**GPIO Data**

MEDIATEK CONFIDENTIAL
FOR fairwang@symtex.com.tw USE ONLY

This document contains information that is proprietary to MediaTek Inc.
Unauthorized reproduction or disclosure of this information in whole or in part is strictly prohibited.

10000630 **GPIO_DSET_0** **GPIO0 to GPIO31 data set register** **FFFFFFFF**

Bit	31	30	29	28	27	26	25	24	23	22	21	20	19	18	17	16
Name	GPIODSET0[31:16]															
Type	WO															
Reset	1	1	1	1	1	1	1	1	1	1	1	1	1	1	1	1
Bit	15	14	13	12	11	10	9	8	7	6	5	4	3	2	1	0
Name	GPIODSET0[15:0]															
Type	WO															
Reset	1	1	1	1	1	1	1	1	1	1	1	1	1	1	1	1

Bit(s)	Name	Description
31:0	GPIODSET0	**GPIO Data Set** 1: Set the GPIO_DATA_0 register 0: No effect

10000634 **GPIO_DSET_1** **GPIO32 to GPIO63 data set register** **FFFFFFFF**

Bit	31	30	29	28	27	26	25	24	23	22	21	20	19	18	17	16
Name	GPIODSET1[31:16]															
Type	WO															
Reset	1	1	1	1	1	1	1	1	1	1	1	1	1	1	1	1
Bit	15	14	13	12	11	10	9	8	7	6	5	4	3	2	1	0
Name	GPIODSET1[15:0]															
Type	WO															
Reset	1	1	1	1	1	1	1	1	1	1	1	1	1	1	1	1

Bit(s)	Name	Description
31:0	GPIODSET1	**GPIO Data Set** 1: Set the GPIO_DATA_1 register 0: No effect

10000638 **GPIO_DSET_2** **GPIO64 to GPIO95 data set register** **FFFFFFFF**

Bit	31	30	29	28	27	26	25	24	23	22	21	20	19	18	17	16
Name	GPIODSET2[31:16]															
Type	WO															
Reset	1	1	1	1	1	1	1	1	1	1	1	1	1	1	1	1
Bit	15	14	13	12	11	10	9	8	7	6	5	4	3	2	1	0
Name	GPIODSET2[15:0]															
Type	WO															
Reset	1	1	1	1	1	1	1	1	1	1	1	1	1	1	1	1

Bit(s)	Name	Description
31:0	GPIODSET2	**GPIO Data Set** 1: Set the GPIO_DATA_2 register 0: No effect

10000640 **GPIO_DCLR_0** **GPIO0 to GPIO31 data clear register** **FFFFFFFF**

MEDIATEK CONFIDENTIAL
FOR farwang@synnet.com.tw USE ONLY

This document contains information that is proprietary to MediaTek Inc.
Unauthorized reproduction or disclosure of this information in whole or in part is strictly prohibited.

Bit	31	30	29	28	27	26	25	24	23	22	21	20	19	18	17	16
Name	GPIODCLR0[31:16]															
Type	WO															
Reset	1	1	1	1	1	1	1	1	1	1	1	1	1	1	1	1
Bit	15	14	13	12	11	10	9	8	7	6	5	4	3	2	1	0
Name	GPIODCLR0[15:0]															
Type	WO															
Reset	1	1	1	1	1	1	1	1	1	1	1	1	1	1	1	1

Bit(s)	Name	Description
31:0	GPIODCLR0	**GPIO Data Clear** 1: Clear the GPIO_DATA_0 register 0: No effect

10000644 **GPIO_DCLR_1** **GPIO32 to GPIO63 data clear register** **FFFFFFFF**

Bit	31	30	29	28	27	26	25	24	23	22	21	20	19	18	17	16
Name	GPIODCLR1[31:16]															
Type	WO															
Reset	1	1	1	1	1	1	1	1	1	1	1	1	1	1	1	1
Bit	15	14	13	12	11	10	9	8	7	6	5	4	3	2	1	0
Name	GPIODCLR1[15:0]															
Type	WO															
Reset	1	1	1	1	1	1	1	1	1	1	1	1	1	1	1	1

Bit(s)	Name	Description
31:0	GPIODCLR1	**GPIO Data Clear** 1: Clear the GPIO_DATA_1 register 0: No effect

10000648 **GPIO_DCLR_2** **GPIO64 to GPIO95 data clear register** **FFFFFFFF**

Bit	31	30	29	28	27	26	25	24	23	22	21	20	19	18	17	16
Name	GPIODCLR2[31:16]															
Type	WO															
Reset	1	1	1	1	1	1	1	1	1	1	1	1	1	1	1	1
Bit	15	14	13	12	11	10	9	8	7	6	5	4	3	2	1	0
Name	GPIODCLR2[15:0]															
Type	WO															
Reset	1	1	1	1	1	1	1	1	1	1	1	1	1	1	1	1

Bit(s)	Name	Description
31:0	GPIODCLR2	**GPIO Data Clear** 1: Clear the GPIO_DATA_2 register 0: No effect

10000650 **GINT_REDGE_0** **GPIO0 to GPIO31 rising edge interrupt enable register** **00000000**

Bit	31	30	29	28	27	26	25	24	23	22	21	20	19	18	17	16
Name	GINTREDGE0[31:16]															
Type	RW															
Reset	0	0	0	0	0	0	0	0	0	0	0	0	0	0	0	0

MEDIATEK CONFIDENTIAL
FOR farrwang@synnex.com.tw USE ONLY

This document contains information that is proprietary to MediaTek Inc.
Unauthorized reproduction or disclosure of this information in whole or in part is strictly prohibited.

Bit	15	14	13	12	11	10	9	8	7	6	5	4	3	2	1	0
Name	GINTREDGE0[15:0]															
Type	RW															
Reset	0	0	0	0	0	0	0	0	0	0	0	0	0	0	0	0

Bit(s)	Name	Description
31:0	GINTREDGE0	**GPIO Rising Edge Interrupt Enable** 1: Enable rising edge triggered 0: Disable rising edge triggered

10000654 **GINT_REDGE_1** **GPIO32 to GPIO63 rising edge interrupt enable register** **00000000**

Bit	31	30	29	28	27	26	25	24	23	22	21	20	19	18	17	16
Name	GINTREDGE1[31:16]															
Type	RW															
Reset	0	0	0	0	0	0	0	0	0	0	0	0	0	0	0	0
Bit	15	14	13	12	11	10	9	8	7	6	5	4	3	2	1	0
Name	GINTREDGE1[15:0]															
Type	RW															
Reset	0	0	0	0	0	0	0	0	0	0	0	0	0	0	0	0

Bit(s)	Name	Description
31:0	GINTREDGE1	**GPIO Rising Edge Interrupt Enable** 1: Enable rising edge triggered 0: Disable rising edge triggered

10000658 **GINT_REDGE_2** **GPIO64 to GPIO95 rising edge interrupt enable register** **00000000**

Bit	31	30	29	28	27	26	25	24	23	22	21	20	19	18	17	16
Name	GINTREDGE2[31:16]															
Type	RW															
Reset	0	0	0	0	0	0	0	0	0	0	0	0	0	0	0	0
Bit	15	14	13	12	11	10	9	8	7	6	5	4	3	2	1	0
Name	GINTREDGE2[15:0]															
Type	RW															
Reset	0	0	0	0	0	0	0	0	0	0	0	0	0	0	0	0

Bit(s)	Name	Description
31:0	GINTREDGE2	**GPIO Rising Edge Interrupt Enable** 1: Enable rising edge triggered 0: Disable rising edge triggered

10000660 **GINT_FEDGE_0** **GPIO0 to GPIO31 falling edge interrupt enable register** **00000000**

Bit	31	30	29	28	27	26	25	24	23	22	21	20	19	18	17	16
Name	GINTFEDGE0[31:16]															
Type	RW															
Reset	0	0	0	0	0	0	0	0	0	0	0	0	0	0	0	0
Bit	15	14	13	12	11	10	9	8	7	6	5	4	3	2	1	0
Name	GINTFEDGE0[15:0]															
Type	RW															
Reset	0	0	0	0	0	0	0	0	0	0	0	0	0	0	0	0

MEDIATEK CONFIDENTIAL
FOR taiwan@symnex.com.tw USE ONLY

This document contains information that is proprietary to MediaTek Inc.
Unauthorized reproduction or disclosure of this information in whole or in part is strictly prohibited.

Bit(s)	Name	Description
31:0	GINTFEDGE0	**GPIO Falling Edge Interrupt Enable** 1: Enable falling edge triggered 0: Disable falling edge triggered

10000664 **GINT_FEDGE_1** **GPIO32 to GPIO63 falling edge interrupt enable register** **00000000**

Bit	31	30	29	28	27	26	25	24	23	22	21	20	19	18	17	16
Name	GINTFEDGE1[31:16]															
Type	RW															
Reset	0	0	0	0	0	0	0	0	0	0	0	0	0	0	0	0
Bit	15	14	13	12	11	10	9	8	7	6	5	4	3	2	1	0
Name	GINTFEDGE1[15:0]															
Type	RW															
Reset	0	0	0	0	0	0	0	0	0	0	0	0	0	0	0	0

Bit(s)	Name	Description
31:0	GINTFEDGE1	**GPIO Falling Edge Interrupt Enable** 1: Enable falling edge triggered 0: Disable falling edge triggered

10000668 **GINT_FEDGE_2** **GPIO64 to GPIO95 falling edge interrupt enable register** **00000000**

Bit	31	30	29	28	27	26	25	24	23	22	21	20	19	18	17	16
Name	GINTFEDGE2[31:16]															
Type	RW															
Reset	0	0	0	0	0	0	0	0	0	0	0	0	0	0	0	0
Bit	15	14	13	12	11	10	9	8	7	6	5	4	3	2	1	0
Name	GINTFEDGE2[15:0]															
Type	RW															
Reset	0	0	0	0	0	0	0	0	0	0	0	0	0	0	0	0

Bit(s)	Name	Description
31:0	GINTFEDGE2	**GPIO Falling Edge Interrupt Enable** 1: Enable falling edge triggered 0: Disable falling edge triggered

10000670 **GINT_HLVL_0** **GPIO0 to GPIO31 high level interrupt enable register** **00000000**

Bit	31	30	29	28	27	26	25	24	23	22	21	20	19	18	17	16
Name	GINTHLVL0[31:16]															
Type	RW															
Reset	0	0	0	0	0	0	0	0	0	0	0	0	0	0	0	0
Bit	15	14	13	12	11	10	9	8	7	6	5	4	3	2	1	0
Name	GINTHLVL0[15:0]															
Type	RW															
Reset	0	0	0	0	0	0	0	0	0	0	0	0	0	0	0	0

Bit(s)	Name	Description
31:0	GINTHLVL0	**GPIO High Level Interrupt Enable**

FOR MEDIATEK CONFIDENTIAL
fanwang@synnex.com.tw USE ONLY

This document contains information that is proprietary to MediaTek Inc.
Unauthorized reproduction or disclosure of this information in whole or in part is strictly prohibited.

Bit(s)	Name	Description
		1: Enable high level triggered 0: Disable high level triggered

10000674 GINT_HLVL_1 GPIO32 to GPIO63 high level interrupt enable register 00000000

Bit	31	30	29	28	27	26	25	24	23	22	21	20	19	18	17	16
Name	GINTHLVL1[31:16]															
Type	RW															
Reset	0	0	0	0	0	0	0	0	0	0	0	0	0	0	0	0
Bit	15	14	13	12	11	10	9	8	7	6	5	4	3	2	1	0
Name	GINTHLVL1[15:0]															
Type	RW															
Reset	0	0	0	0	0	0	0	0	0	0	0	0	0	0	0	0

Bit(s)	Name	Description
31:0	GINTHLVL1	**GPIO High Level Interrupt Enable** 1: Enable high level triggered 0: Disable high level triggered

10000678 GINT_HLVL_2 GPIO64 to GPIO95 high level interrupt enable register 00000000

Bit	31	30	29	28	27	26	25	24	23	22	21	20	19	18	17	16
Name	GINTHLVL2[31:16]															
Type	RW															
Reset	0	0	0	0	0	0	0	0	0	0	0	0	0	0	0	0
Bit	15	14	13	12	11	10	9	8	7	6	5	4	3	2	1	0
Name	GINTHLVL2[15:0]															
Type	RW															
Reset	0	0	0	0	0	0	0	0	0	0	0	0	0	0	0	0

Bit(s)	Name	Description
31:0	GINTHLVL2	**GPIO High Level Interrupt Enable** 1: Enable high level triggered 0: Disable high level triggered

10000680 GINT_LLVL_0 GPIO0 to GPIO31 low level interrupt enable register 00000000

Bit	31	30	29	28	27	26	25	24	23	22	21	20	19	18	17	16
Name	GINTLLVL0[31:16]															
Type	RW															
Reset	0	0	0	0	0	0	0	0	0	0	0	0	0	0	0	0
Bit	15	14	13	12	11	10	9	8	7	6	5	4	3	2	1	0
Name	GINTLLVL0[15:0]															
Type	RW															
Reset	0	0	0	0	0	0	0	0	0	0	0	0	0	0	0	0

Bit(s)	Name	Description
31:0	GINTLLVL0	**GPIO Low Level Interrupt Enable** 1: Enable low level triggered 0: Disable low level triggered

FOR MEDIATEK CONFIDENTIAL
fairwang@symmx.com.tw USE ONLY

This document contains information that is proprietary to MediaTek Inc.
Unauthorized reproduction or disclosure of this information in whole or in part is strictly prohibited.

10000684 **GINT_LLVL_1** **GPIO32 to GPIO63 low level interrupt enable register** **00000000**

Bit	31	30	29	28	27	26	25	24	23	22	21	20	19	18	17	16
Name	GINTLLVL1[31:16]															
Type	RW															
Reset	0	0	0	0	0	0	0	0	0	0	0	0	0	0	0	0
Bit	15	14	13	12	11	10	9	8	7	6	5	4	3	2	1	0
Name	GINTLLVL1[15:0]															
Type	RW															
Reset	0	0	0	0	0	0	0	0	0	0	0	0	0	0	0	0

Bit(s)	Name	Description
31:0	GINTLLVL1	**GPIO Low Level Interrupt Enable** 1: Enable low level triggered 0: Disable low level triggered

10000688 **GINT_LLVL_2** **GPIO64 to GPIO95 low level interrupt enable register** **00000000**

Bit	31	30	29	28	27	26	25	24	23	22	21	20	19	18	17	16
Name	GINTLLVL2[31:16]															
Type	RW															
Reset	0	0	0	0	0	0	0	0	0	0	0	0	0	0	0	0
Bit	15	14	13	12	11	10	9	8	7	6	5	4	3	2	1	0
Name	GINTLLVL2[15:0]															
Type	RW															
Reset	0	0	0	0	0	0	0	0	0	0	0	0	0	0	0	0

Bit(s)	Name	Description
31:0	GINTLLVL2	**GPIO Low Level Interrupt Enable** 1: Enable low level triggered 0: Disable low level triggered

10000690 **GINT_STAT_0** **GPIO0 to GPIO31 interrupt status register** **00000000**

Bit	31	30	29	28	27	26	25	24	23	22	21	20	19	18	17	16
Name	GINTSTAT0[31:16]															
Type	W1C															
Reset	0	0	0	0	0	0	0	0	0	0	0	0	0	0	0	0
Bit	15	14	13	12	11	10	9	8	7	6	5	4	3	2	1	0
Name	GINTSTAT0[15:0]															
Type	W1C															
Reset	0	0	0	0	0	0	0	0	0	0	0	0	0	0	0	0

Bit(s)	Name	Description
31:0	GINTSTAT0	**GPIO Interrupt Status** 1: Interrupt is detected 0: Interrupt is not detected

MEDIATEK CONFIDENTIAL
FOR farrwang@sunnex.com.tw USE ONLY

This document contains information that is proprietary to MediaTek Inc.
Unauthorized reproduction or disclosure of this information in whole or in part is strictly prohibited.

10000694 GINT_STAT_1 GPIO32 to GPIO63 interrupt status register 00000000

Bit	31	30	29	28	27	26	25	24	23	22	21	20	19	18	17	16
Name	GINTSTAT1[31:16]															
Type	W1C															
Reset	0	0	0	0	0	0	0	0	0	0	0	0	0	0	0	0
Bit	15	14	13	12	11	10	9	8	7	6	5	4	3	2	1	0
Name	GINTSTAT1[15:0]															
Type	W1C															
Reset	0	0	0	0	0	0	0	0	0	0	0	0	0	0	0	0

Bit(s)	Name	Description
31:0	GINTSTAT1	**GPIO Interrupt Status** 1: Interrupt is detected 0: Interrupt is not detected

10000698 GINT_STAT_2 GPIO64 to GPIO95 interrupt status register 00000000

Bit	31	30	29	28	27	26	25	24	23	22	21	20	19	18	17	16
Name	GINTSTAT2[31:16]															
Type	W1C															
Reset	0	0	0	0	0	0	0	0	0	0	0	0	0	0	0	0
Bit	15	14	13	12	11	10	9	8	7	6	5	4	3	2	1	0
Name	GINTSTAT2[15:0]															
Type	W1C															
Reset	0	0	0	0	0	0	0	0	0	0	0	0	0	0	0	0

Bit(s)	Name	Description
31:0	GINTSTAT2	**GPIO Interrupt Status** 1: Interrupt is detected 0: Interrupt is not detected

100006A0 GINT_EDGE_0 GPIO0 to GPIO31 edge status register 00000000

Bit	31	30	29	28	27	26	25	24	23	22	21	20	19	18	17	16
Name	GINTEDGE0[31:16]															
Type	W1C															
Reset	0	0	0	0	0	0	0	0	0	0	0	0	0	0	0	0
Bit	15	14	13	12	11	10	9	8	7	6	5	4	3	2	1	0
Name	GINTEDGE0[15:0]															
Type	W1C															
Reset	0	0	0	0	0	0	0	0	0	0	0	0	0	0	0	0

Bit(s)	Name	Description
31:0	GINTEDGE0	**GPIO Interrupt Edge Status** 1: Rising edge 0: Falling edge

100006A4 GINT_EDGE_1 GPIO32 to GPIO63 edge status register 00000000

MEDIATEK CONFIDENTIAL
FOR farwang@syanet.com.tw USE ONLY

This document contains information that is proprietary to MediaTek Inc.
Unauthorized reproduction or disclosure of this information in whole or in part is strictly prohibited.

Bit	31	30	29	28	27	26	25	24	23	22	21	20	19	18	17	16
Name	GINTEDGE1[31:16]															
Type	W1C															
Reset	0	0	0	0	0	0	0	0	0	0	0	0	0	0	0	0
Bit	15	14	13	12	11	10	9	8	7	6	5	4	3	2	1	0
Name	GINTEDGE1[15:0]															
Type	W1C															
Reset	0	0	0	0	0	0	0	0	0	0	0	0	0	0	0	0

Bit(s)	Name	Description
31:0	GINTEDGE1	**GPIO Interrupt Edge Status** 1: Rising edge 0: Falling edge

100006A8 **GINT_EDGE_2** **GPIO64 to GPIO95 edge status register** **00000000**

Bit	31	30	29	28	27	26	25	24	23	22	21	20	19	18	17	16
Name	GINTEDGE2[31:16]															
Type	W1C															
Reset	0	0	0	0	0	0	0	0	0	0	0	0	0	0	0	0
Bit	15	14	13	12	11	10	9	8	7	6	5	4	3	2	1	0
Name	GINTEDGE2[15:0]															
Type	W1C															
Reset	0	0	0	0	0	0	0	0	0	0	0	0	0	0	0	0

Bit(s)	Name	Description
31:0	GINTEDGE2	**GPIO Interrupt Edge Status** 1: Rising edge 0: Falling edge

MEDIATEK CONFIDENTIAL
FOR farrwang@synnex.com.tw USE ONLY

This document contains information that is proprietary to MediaTek Inc.
Unauthorized reproduction or disclosure of this information in whole or in part is strictly prohibited.

2.9 SPI Slave

2.9.1 SPI Slave Control

spis_intf Changes LOG

Revision	Date	Author	Change Log
0.1	2013/9/23	Kaiping Yen	Initialization

Module name: spis_intf Base address: (+0h)

Address	Name	Width	Register Function
00000000	REG00	32	SPI Slave Register 00
00000004	REG01	32	SPI Slave Register 01
00000008	REG02	32	SPI Slave Register 02
0000000C	REG03	32	SPI Slave Register 03
00000010	REG04	32	SPI Slave Register 04

00000000 REG00 SPI Slave Register 00 00000000

Bit	31	30	29	28	27	26	25	24	23	22	21	20	19	18	17	16
Name	bus_read_data[31:16]															
Type	RO															
Reset	0	0	0	0	0	0	0	0	0	0	0	0	0	0	0	0
Bit	15	14	13	12	11	10	9	8	7	6	5	4	3	2	1	0
Name	bus_read_data[15:0]															
Type	RO															
Reset	0	0	0	0	0	0	0	0	0	0	0	0	0	0	0	0

Bit(s)	Name	Description
31:0	bus_read_data	SPI Slave Register 00 for bus read data

00000004 REG01 SPI Slave Register 01 00000000

Bit	31	30	29	28	27	26	25	24	23	22	21	20	19	18	17	16
Name	bus_write_data[31:16]															
Type	RW															
Reset	0	0	0	0	0	0	0	0	0	0	0	0	0	0	0	0
Bit	15	14	13	12	11	10	9	8	7	6	5	4	3	2	1	0
Name	bus_write_data[15:0]															
Type	RW															
Reset	0	0	0	0	0	0	0	0	0	0	0	0	0	0	0	0

Bit(s)	Name	Description
31:0	bus_write_data	SPI Slave Register 01 for bus write data

00000008 REG02 SPI Slave Register 02 0000000

MEDIATEK CONFIDENTIAL
FOR farrwans@synnex.com.tw USE ONLY

This document contains information that is proprietary to MediaTek Inc.
Unauthorized reproduction or disclosure of this information in whole or in part is strictly prohibited.

0

Bit	31	30	29	28	27	26	25	24	23	22	21	20	19	18	17	16
Name	bus_address[31:16]															
Type	RW															
Reset	0	0	0	0	0	0	0	0	0	0	0	0	0	0	0	0
Bit	15	14	13	12	11	10	9	8	7	6	5	4	3	2	1	0
Name	bus_address[15:0]															
Type	RW															
Reset	0	0	0	0	0	0	0	0	0	0	0	0	0	0	0	0

Bit(s)	Name	Description
31:0	bus_address	**SPI Slave Register 02 for bus address** This address must be physical address

0000000C REG03 SPI Slave Register 03

00000000

Bit	31	30	29	28	27	26	25	24	23	22	21	20	19	18	17	16
Name	reg03_31_5[26:11]															
Type	RW															
Reset	0	0	0	0	0	0	0	0	0	0	0	0	0	0	0	0
Bit	15	14	13	12	11	10	9	8	7	6	5	4	3	2	1	0
Name	reg03_31_5[10:0]											bus_pb_rb_sel	reg03_3	bus_size		bus_r_w
Type	RW											RW	RW	RW		RW
Reset	0	0	0	0	0	0	0	0	0	0	0	0	0	0	0	0

Bit(s)	Name	Description
31:5	reg03_31_5	**reg03[31:5] reserved bit**
4	bus_pb_rb_sel	**Bus interface selection** 0: Bus transaction is asserted by Rbus master interface, can access DRAM and peripheral registers 1: Bus transaction is asserted by Pbus master interface, can peripheral registers only
3	reg03_3	**reg03[3] reserved bit**
2:1	bus_size	**Bus access size** 00: reserved 01: reserved 10: word (4bytes) 11: reserved
0	bus_r_w	**Bus access type** 0: read 1: write

00000010 REG04 SPI Slave Register 04

00000000

Bit	31	30	29	28	27	26	25	24	23	22	21	20	19	18	17	16
Name																
Type																
Reset																
Bit	15	14	13	12	11	10	9	8	7	6	5	4	3	2	1	0
Name																bus_bu

MEDIATEK CONFIDENTIAL
FOR fan.wang@mediatek.com.tw USE ONLY

This document contains information that is proprietary to MediaTek Inc.
Unauthorized reproduction or disclosure of this information in whole or in part is strictly prohibited.

																sy
Type																RO
Reset																0

Bit(s)	Name	Description
0	bus_busy	**Bus (Internal Rbus/Pbus Master) interface status** 0: SPIS bus interface is idle for next access command 1: SPIS bus interface is busy

2.9.2 Regsiters

spis_pbslv Changes LOG

Revision	Date	Author	Change Log
0.1	2013/9/23	Kaiping Yen	Initialization

Module name: spis_pbslv Base address: (+10000700h)

Address	Name	Width	Register Function
10000700	SPIS_REG0	32	SPI Slave Register 0
10000704	SPIS_REG1	32	SPI Slave Register 1
10000708	SPIS_REG2	32	SPI Slave Register 2
1000070C	SPIS_REG3	32	SPI Slave Register 3
10000710	SPIS_REG4	32	SPI Slave Register 4
10000740	SPIS_CFG	32	SPI Slave Configuration

10000700 SPIS_REG0 SPI Slave Register 0 00000000

Bit	31	30	29	28	27	26	25	24	23	22	21	20	19	18	17	16
Name	spis_reg0[31:16]															
Type	RO															
Reset	0	0	0	0	0	0	0	0	0	0	0	0	0	0	0	0
Bit	15	14	13	12	11	10	9	8	7	6	5	4	3	2	1	0
Name	spis_reg0[15:0]															
Type	RO															
Reset	0	0	0	0	0	0	0	0	0	0	0	0	0	0	0	0

Bit(s)	Name	Description
31:0	spis_reg0	**SPI Slave Register 0**

10000704 SPIS_REG1 SPI Slave Register 1 00000000

Bit	31	30	29	28	27	26	25	24	23	22	21	20	19	18	17	16
Name	spis_reg1[31:16]															
Type	RO															
Reset	0	0	0	0	0	0	0	0	0	0	0	0	0	0	0	0
Bit	15	14	13	12	11	10	9	8	7	6	5	4	3	2	1	0
Name	spis_reg1[15:0]															
Type	RO															

MEDIATEK CONFIDENTIAL
FOR farwang@symnet.com.tw USE ONLY

This document contains information that is proprietary to MediaTek Inc.
Unauthorized reproduction or disclosure of this information in whole or in part is strictly prohibited.

Reset	0	0	0	0	0	0	0	0	0	0	0	0	0	0	0	0

Bit(s)	Name	Description
31:0	spis_reg1	**SPI Slave Register 1**

10000708 **SPIS_REG2** **SPI Slave Register 2** **00000000**

Bit	31	30	29	28	27	26	25	24	23	22	21	20	19	18	17	16
Name	spis_reg2[31:16]															
Type	RO															
Reset	0	0	0	0	0	0	0	0	0	0	0	0	0	0	0	0
Bit	15	14	13	12	11	10	9	8	7	6	5	4	3	2	1	0
Name	spis_reg2[15:0]															
Type	RO															
Reset	0	0	0	0	0	0	0	0	0	0	0	0	0	0	0	0

Bit(s)	Name	Description
31:0	spis_reg2	**SPI Slave Register 2**

1000070C **SPIS_REG3** **SPI Slave Register 3** **00000000**

Bit	31	30	29	28	27	26	25	24	23	22	21	20	19	18	17	16
Name	spis_reg3[31:16]															
Type	RO															
Reset	0	0	0	0	0	0	0	0	0	0	0	0	0	0	0	0
Bit	15	14	13	12	11	10	9	8	7	6	5	4	3	2	1	0
Name	spis_reg3[15:0]															
Type	RO															
Reset	0	0	0	0	0	0	0	0	0	0	0	0	0	0	0	0

Bit(s)	Name	Description
31:0	spis_reg3	**SPI Slave Register 3**

10000710 **SPIS_REG4** **SPI Slave Register 4** **00000000**

Bit	31	30	29	28	27	26	25	24	23	22	21	20	19	18	17	16
Name	spis_reg4[31:16]															
Type	RO															
Reset	0	0	0	0	0	0	0	0	0	0	0	0	0	0	0	0
Bit	15	14	13	12	11	10	9	8	7	6	5	4	3	2	1	0
Name	spis_reg4[15:0]															
Type	RO															
Reset	0	0	0	0	0	0	0	0	0	0	0	0	0	0	0	0

Bit(s)	Name	Description
31:0	spis_reg4	**SPI Slave Register 4**

10000740 **SPIS_CFG** **SPI Slave Configuration** **0000000**

MEDIATEK CONFIDENTIAL
FOR farrwang@synnex.com.tw USE ONLY

This document contains information that is proprietary to MediaTek Inc.
Unauthorized reproduction or disclosure of this information in whole or in part is strictly prohibited.

0

Bit	31	30	29	28	27	26	25	24	23	22	21	20	19	18	17	16
Name																
Type																
Reset																
Bit	15	14	13	12	11	10	9	8	7	6	5	4	3	2	1	0
Name															**spis_mode**	
Type															RW	
Reset															0	0

Bit(s)	Name	Description
1:0	spis_mode	**SPI slave clock polarity and phase configuration** 2'b00: CPOL=0, CPHA=0 2'b01: CPOL=0, CPHA=1 2'b10: CPOL=1, CPHA=0 2'b11: CPOL=1, CPHA=1

MEDIATEK CONFIDENTIAL
FOR farrwang@ synnex.com.tw USE ONLY

This document contains information that is proprietary to MediaTek Inc.
Unauthorized reproduction or disclosure of this information in whole or in part is strictly prohibited.

2.10 I²C Controller

2.10.1 Features

- Programmable I²C bus clock rate
- Supports the Synchronous Inter-Integrated Circuits (I²C) serial protocol
- Bi-directional data transfer
- Programmable address width up to 8 bits
- Sequential byte read or write capability
- Device address and data address can be transmitted for device, page and address selection
- Supports Standard mode and Fast mode

2.10.2 List of Registers

I2C Changes LOG

Revision	Date	Author	Change Log
0.1	2012/10/3	Evan Chou	Initialization

Module name: I2C Base address: (+10000900h)

Address	Name	Width	Register Function
10000908	SM0CFG0	32	SERIAL INTERFACE MASTER 0 CONFIG 0 REGISTER
10000910	SM0DOUT	32	SERIAL INTERFACE MASTER 0 DATAOUT REGISTER
10000914	SM0DIN	32	SERIAL INTERFACE MASTER 0 DATAIN REGISTER
10000918	SM0ST	32	SERIAL INTERFACE MASTER 0 STATUS REGISTER
1000091C	SM0AUTO	32	SERIAL INTERFACE MASTER 0 AUTO-MODE REGISTER
10000920	SM0CFG1	32	SERIAL INTERFACE MASTER 0 CONFIG 1 REGISTER
10000928	SM0CFG2	32	SERIAL INTERFACE MASTER 0 CONFIG 2 REGISTER
10000940	SM0CTL0	32	Serial interface master 0 control 0 register
10000944	SM0CTL1	32	Serial interface master 0 control 1 register
10000950	SM0D0	32	Serial interface master 0 data 0 register
10000954	SM0D1	32	Serial interface master 0 data 1 register
1000095C	PINTEN	32	Peripheral interrupt enable register
10000960	PINTST	32	Peripheral interrupt status register
10000964	PINTCL	32	Peripheral interrupt clear register

10000908 SM0CFG0 SERIAL INTERFACE MASTER 0 CONFIG 0 REGISTER 00000000

Bit	31	30	29	28	27	26	25	24	23	22	21	20	19	18	17	16
Name																
Type																
Reset																
Bit	15	14	13	12	11	10	9	8	7	6	5	4	3	2	1	0
Name										SM0_DEVADDR						
Type										RW						
Reset										0	0	0	0	0	0	0

Bit(s)	Name	Description

FOR MEDIATEK CONFIDENTIAL
fatwang@sypro.com.tw USE ONLY

This document contains information that is proprietary to MediaTek Inc.
Unauthorized reproduction or disclosure of this information in whole or in part is strictly prohibited.

Bit(s)	Name	Description
6:0	SM0_DEVADDR	**Device address for transmission**

10000910 **SM0DOUT** **SERIAL INTERFACE MASTER 0 DATAOUT REGISTER** **00000000**

Bit	31	30	29	28	27	26	25	24	23	22	21	20	19	18	17	16
Name																
Type																
Reset																
Bit	15	14	13	12	11	10	9	8	7	6	5	4	3	2	1	0
Name									SM0_DATAOUT							
Type									RW							
Reset									0	0	0	0	0	0	0	0

Bit(s)	Name	Description
7:0	SM0_DATAOUT	**Data out register for auto mode**

10000914 **SM0DIN** **SERIAL INTERFACE MASTER 0 DATAIN REGISTER** **00000000**

Bit	31	30	29	28	27	26	25	24	23	22	21	20	19	18	17	16
Name																
Type																
Reset																
Bit	15	14	13	12	11	10	9	8	7	6	5	4	3	2	1	0
Name									SM0_DATAIN							
Type									RO							
Reset									0	0	0	0	0	0	0	0

Bit(s)	Name	Description
7:0	SM0_DATAIN	**Data in register for auto mode**

10000918 **SM0ST** **SERIAL INTERFACE MASTER 0 STATUS REGISTER** **00000002**

Bit	31	30	29	28	27	26	25	24	23	22	21	20	19	18	17	16
Name																
Type																
Reset																
Bit	15	14	13	12	11	10	9	8	7	6	5	4	3	2	1	0
Name														SM0_RDATA_RDY	SM0_WDATA_EMPTY	SM0_BUSY
Type														RW	RW	RO
Reset														0	1	0

Bit(s)	Name	Description
2	SM0_RDATA_RDY	**I2C read data is ready**
1	SM0_WDATA_EMPTY	**I2C data output register is empty**

MEDIATEK CONFIDENTIAL
FOR tarwang@synnex.com.tw USE ONLY

This document contains information that is proprietary to MediaTek Inc.
Unauthorized reproduction or disclosure of this information in whole or in part is strictly prohibited.

Bit(s)	Name	Description
0	SM0_BUSY	**State machine is busy**

1000091C **SM0AUTO** **SERIAL INTERFACE MASTER 0 AUTO-MODE REGISTER** **00000000**

Bit	31	30	29	28	27	26	25	24	23	22	21	20	19	18	17	16
Name																
Type																
Reset																
Bit	15	14	13	12	11	10	9	8	7	6	5	4	3	2	1	0
Name																SM0_START_RW
Type																RW
Reset																0

Bit(s)	Name	Description
0	SM0_START_RW	**Written with 1 to start a read transaction, and 0 to start a write transaction. This bit is only valid at auto mode.**

10000920 **SM0CFG1** **SERIAL INTERFACE MASTER 0 CONFIG 1 REGISTER** **00000000**

Bit	31	30	29	28	27	26	25	24	23	22	21	20	19	18	17	16
Name																
Type																
Reset																
Bit	15	14	13	12	11	10	9	8	7	6	5	4	3	2	1	0
Name											SM0_BYTECNT					
Type											RW					
Reset											0	0	0	0	0	0

Bit(s)	Name	Description
5:0	SM0_BYTECNT	**The value + 1 indicateds the number of data bytes for sequential reads/writes. (word address is included in data bytes)**

10000928 **SM0CFG2** **SERIAL INTERFACE MASTER 0 CONFIG 2 REGISTER** **00000000**

Bit	31	30	29	28	27	26	25	24	23	22	21	20	19	18	17	16
Name																
Type																
Reset																
Bit	15	14	13	12	11	10	9	8	7	6	5	4	3	2	1	0
Name																SM0_IS_AUTOMODE
Type																RW
Reset																0

MEDIATEK CONFIDENTIAL
FOR fariwang@synnex.com.tw USE ONLY

This document contains information that is proprietary to MediaTek Inc.
Unauthorized reproduction or disclosure of this information in whole or in part is strictly prohibited.

Bit(s)	Name	Description
0	SM0_IS_AUTOMODE	**Set 1 to configure auto mode**

10000940 **SM0CTL0** **Serial interface master 0 control 0 register** **00008000**

Bit	31	30	29	28	27	26	25	24	23	22	21	20	19	18	17	16
Name	SM0_ODRAIN	RESV0			SM0_CLK_DIV											
Type	RW	RO			RW											
Reset	0	0	0	0	0	0	0	0	0	0	0	0	0	0	0	0
Bit	15	14	13	12	11	10	9	8	7	6	5	4	3	2	1	0
Name	SIF_VSYNC	RESV1	SM0_VSYNC_MODE		RESV2							SM0_CS_STATUS	SM0_SCL_STATE	SM0_SDA_STATE	SM0_EN	SM0_SCL_STRECH
Type	RO	RO	RW		RO							RO	RO	RO	RW	RW
Reset	1	0	0	0	0	0	0	0	0	0	0	0	0	0	0	0

Bit(s)	Name	Description
31	SM0_ODRAIN	**Open-drain output configuration** 0: When SIF output is logic 1, the output is pulled high by outer devices. SIF output is open-drained. 1: When SIF output is logic 1, the output is pulled high by SIF master 0.
30:28	RESV0	
27:16	SM0_CLK_DIV	**SIF master 0 clock divide value** This is used to set the divider to generate expected SCL.
15	SIF_VSYNC	
14	RESV1	
13:12	SM0_VSYNC_MODE	**Restrict SIF master 0 trigger within VSYNC pulse** 00: Disable 01: Allow triggered in VSYNC pulse 10: Allow triggered at VSYNC rising edge
11:5	RESV2	
4	SM0_CS_STATUS	**Clock stretching status** 0: no clock stretching 1: clock stretching
3	SM0_SCL_STATE	**SCL value on the bus**
2	SM0_SDA_STATE	**SDA value on the bus**
1	SM0_EN	**SIF master 0 enable bit** 0: Disable SIF master 0. 1: Enable SIF master 0.
0	SM0_SCL_STRECH	**Clock stretching enable** 0: Not allow slaves hold SCL 1: Allow slaves hold SCL

10000944 **SM0CTL1** **Serial interface master 0 control 1 register** **0000000**

MEDIATEK CONFIDENTIAL
FOR fairwang@synnex.com.tw USE ONLY

This document contains information that is proprietary to MediaTek Inc.
Unauthorized reproduction or disclosure of this information in whole or in part is strictly prohibited.

0

Bit	31	30	29	28	27	26	25	24	23	22	21	20	19	18	17	16
Name									SM0_ACK							
Type									RO							
Reset									0	0	0	0	0	0	0	0
Bit	15	14	13	12	11	10	9	8	7	6	5	4	3	2	1	0
Name						SM0_PGLEN				SM0_MODE						SM0_TRI
Type						RW				RW						RW
Reset						0	0	0		0	0	0				0

Bit(s)	Name	Description
23:16	SM0_ACK	**Acknowledge bits** ACK[7:0] is acknowledge of 8 bytes of data
10:8	SM0_PGLEN	**Page length** Page length of sequential read/write. The maximum is 8 bytes. Set 0 as 1 byte.
6:4	SM0_MODE	**SIF master mode** 001: Start 010: Write data 011: Stop 100: Read data with no ack for final byte 101: Read data with ack
0	SM0_TRI	**Trigger serial interface** 0: Read back as serial interface is idle. 1: Set 1 to trigger this serial interface. Read back as serial interface is busy.

10000950 **SM0D0** **Serial interface master 0 data 0 register** **FFFFFFFF**

Bit	31	30	29	28	27	26	25	24	23	22	21	20	19	18	17	16
Name	SM0_DATA3								SM0_DATA2							
Type	RW								RW							
Reset	x	x	x	x	x	x	x	x	x	x	x	x	x	x	x	x
Bit	15	14	13	12	11	10	9	8	7	6	5	4	3	2	1	0
Name	SM0_DATA1								SM0_DATA0							
Type	RW								RW							
Reset	x	x	x	x	x	x	x	x	x	x	x	x	x	x	x	x

Bit(s)	Name	Description
31:24	SM0_DATA3	**Serial interface data byte 3**
23:16	SM0_DATA2	**Serial interface data byte 2**
15:8	SM0_DATA1	**Serial interface data byte 1**
7:0	SM0_DATA0	**Serial interface data byte 0**

10000954 **SM0D1** **Serial interface master 0 data 1 register** **FFFFFFFF**

Bit	31	30	29	28	27	26	25	24	23	22	21	20	19	18	17	16
Name	SM0_DATA7								SM0_DATA6							
Type	RW								RW							
Reset	x	x	x	x	x	x	x	x	x	x	x	x	x	x	x	x
Bit	15	14	13	12	11	10	9	8	7	6	5	4	3	2	1	0
Name	SM0_DATA5								SM0_DATA4							

MEDIATEK CONFIDENTIAL
FOR fanrwang@symnex.com.tw USE ONLY

This document contains information that is proprietary to MediaTek Inc.
Unauthorized reproduction or disclosure of this information in whole or in part is strictly prohibited.

Type	RW								RW							
Reset	x	x	x	x	x	x	x	x	x	x	x	x	x	x	x	x

Bit(s)	Name	Description
31:24	SM0_DATA7	**Serial interface data byte 7**
23:16	SM0_DATA6	**Serial interface data byte 6**
15:8	SM0_DATA5	**Serial interface data byte 5**
7:0	SM0_DATA4	**Serial interface data byte 4**

1000095C **PINTEN** **Peripheral interrupt enable register** **00000000**

Bit	31	30	29	28	27	26	25	24	23	22	21	20	19	18	17	16
Name																
Type																
Reset																
Bit	15	14	13	12	11	10	9	8	7	6	5	4	3	2	1	0
Name																**SM0_INT_EN**
Type																RW
Reset																0

Bit(s)	Name	Description
0	SM0_INT_EN	**Serial interface master 0 interrupt enable**

10000960 **PINTST** **Peripheral interrupt status register** **00000000**

Bit	31	30	29	28	27	26	25	24	23	22	21	20	19	18	17	16
Name																
Type																
Reset																
Bit	15	14	13	12	11	10	9	8	7	6	5	4	3	2	1	0
Name																**SM0_INT_ST**
Type																WS
Reset																0

Bit(s)	Name	Description
0	SM0_INT_ST	**Serial interface master 0 interrupt status**

10000964 **PINTCL** **Peripheral interrupt clear register** **00000000**

Bit	31	30	29	28	27	26	25	24	23	22	21	20	19	18	17	16
Name																
Type																
Reset																
Bit	15	14	13	12	11	10	9	8	7	6	5	4	3	2	1	0
Name																**SM0_I**

MEDIATEK CONFIDENTIAL
FOR fan.wang@symnex.com.tw USE ONLY

This document contains information that is proprietary to MediaTek Inc.
Unauthorized reproduction or disclosure of this information in whole or in part is strictly prohibited.

																NT_CL
Type																W1C
Reset																0

Bit(s)	Name	Description
0	SM0_INT_CL	**Serial interface master 0 interrupt clear**

MEDIATEK CONFIDENTIAL
FOR farrwang@ synnex.com.tw USE ONLY

This document contains information that is proprietary to MediaTek Inc.
Unauthorized reproduction or disclosure of this information in whole or in part is strictly prohibited.

2.11 I2S Controller

2.11.1 Features

- I2S transmitter/receiver, which can be configured as master or slave.
- Supports 16-bit data, sampling rates of 8 kHz, 16 kHz, 22.05 kHz, 44.1 kHz, and 48 kHz
- Support stereo audio data transfer.
- 32-byte FIFO are available for data transmission.
- Supports GDMA access
- Supports 12 Mhz bit clock from external source (when in slave mode)

2.11.2 Block Diagram

The I^2S transmitter block diagram is shown as below.

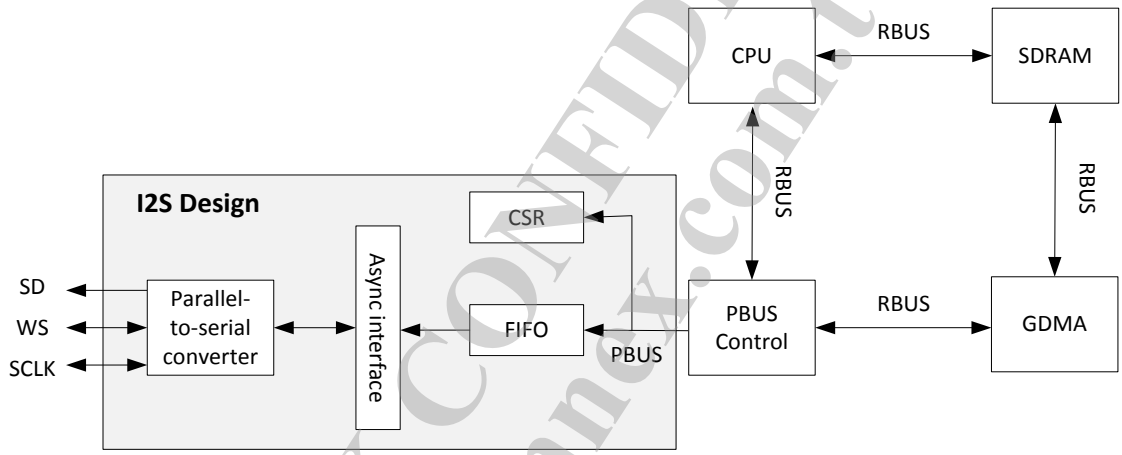

Figure 2-5 I^2S Transmitter Block Diagram

The I^2S interface consists of two separate cores, a transmitter and a receiver. Both can operate in either master or slave mode. The transmitter is only shown here in master or slave mode.

I^2S Signal Timing For I^2S Data Format

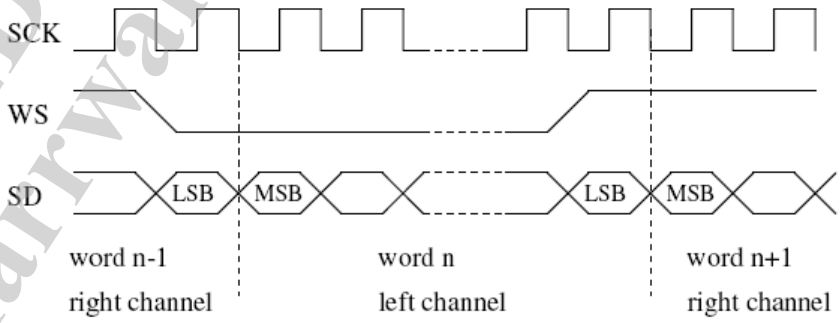

Figure 2-6 I2S Transmit/Receive

MEDIATEK CONFIDENTIAL
FOR fairwang@symnex.com.tw USE ONLY

This document contains information that is proprietary to MediaTek Inc.
Unauthorized reproduction or disclosure of this information in whole or in part is strictly prohibited.

Serial data is transmitted in 2's complement with the MSB first. The transmitter always sends the MSB of the next word one clock period after the WS changes. Serial data sent by the transmitter may be synchronized with either the trailing (HIGH-to-LOW) or the leading (LOW-to-HIGH) edge of the clock signal. However, the serial data must be latched into the receiver on the leading edge of the serial clock signal, and so there are some restrictions when transmitting data that is synchronized with the leading edge.

The word select line indicates the channel being transmitted:

- WS = 0; channel 1 (left)
- WS = 1; channel 2 (right)

WS may change either on a trailing or leading edge of the serial clock, but it doesn't need to be symmetrical. In the slave, this signal is latched on the leading edge of the clock signal. The WS line changes one clock period before the MSB is transmitted. This allows the slave transmitter to derive synchronous timing of the serial data that will be set up for transmission. Furthermore, it enables the receiver to store the previous word and clear the input for the next Word.

2.11.3 Registers

I2S Changes LOG

Revision	Date	Author	Change Log
0.1	2014/1/12	Ken Wu	Initialization

Module name: I2S Base address: (+10000A00h)

Address	Name	Width	Register Function
10000A00	I2S_CFG	32	**I2S Configuration** I2S Tx/Rx Configuration Register
10000A04	INT_STATUS	32	**Interrupt Status** I2S Interrupt Status
10000A08	INT_EN	32	**Interrupt Enable** I2S Interrupt Enable Control Register
10000A0C	FF_STATUS	32	**FIFO Status** I2S Tx/Rx FIFO Status
10000A10	TX_FIFO_WREG	32	**Transmit FIFO Write to Register** Tx Write Data Buffer
10000A14	RX_FIFO_RREG	32	**Receive FIFO Read Register** DRAM PAD CONTROL 3
10000A18	I2S_CFG1	32	**I2S Configuration 1** I2S Loopback Test Control Register
10000A20	DIVCOMP_CFG	32	**Integer Part of the Dividor Register 1** Integer Part of the Dividor Register
10000A28	DIVINT_CFG	32	**Integer Part of the Dividor Register 2** Integer Part of the Dividor Register

10000A00 I2S_CFG I2S Configuration 00014040

Bit	31	30	29	28	27	26	25	24	23	22	21	20	19	18	17	16
Name	I2S_EN	DMA_E	LITTIE	SYS_E				TX_EN				RX_EN		NORM	DATA_	SLAV

MEDIATEK CONFIDENTIAL
FOR farrwang@synnex.com.tw USE ONLY

This document contains information that is proprietary to MediaTek Inc.
Unauthorized reproduction or disclosure of this information in whole or in part is strictly prohibited.

		N	_ENDIAN_DATA_FMT	NDIAN										_24BIT	24BIT	E_MODE
Type	RW	RW	RW	RW				RW				RW		RW	RW	RW
Reset	0	0	0	0				0				0		0	0	1
Bit	15	14	13	12	11	10	9	8	7	6	5	4	3	2	1	0
Name	RX_FF_THRES								TX_FF_THRES							
Type	RW								RW							
Reset	0	1	0	0					0	1	0	0				

Bit(s)	Name	Description
31	I2S_EN	**I2S Enable** Enables I2S. When disabled, all I2S control registers are cleared to their initial values. 0: Disable 1: Enable
30	DMA_EN	**DMA Enable** Enables DMA access. 0: Disable 1: Enable
29	LITTIE_ENDIAN_DATA_FMT	**Little endian audio data** 0: big endian audio data format 1: little endian audio data format
28	SYS_ENDIAN	**System endian setting.** 0: Little endian 1: Big endian
24	TX_EN	**Transmitter on/off control** 0: Disable 1: Enable
20	RX_EN	**Receiver on/off control** 0: Disable 1: Enable
18	NORM_24BIT	**24-bit data format** 0: compact data format 1: normal data format
17	DATA_24BIT	**I2S data width** 0: 16-bit data 1: 24-bit data
16	SLAVE_MODE	**Sets master or slave mode.** 0: Master: using internal clock 1: Slave: using external clock
15:12	RX_FF_THRES	**Rx FIFO Threshold** When the threshold is reached, the host/DMA is notified to fill FIFO. 2<RX_FF_THRES<6 (unit: word)
7:4	TX_FF_THRES	**Tx FIFO Threshold** When the threshold is reached, the host/DMA is notified to fill FIFO. 2<TX_FF_THRES<6 (unit: word)

10000A04 INT_STATUS Interrupt Status 0000000

MEDIATEK CONFIDENTIAL
FOR farrwang@symtex.com.tw USE ONLY

This document contains information that is proprietary to MediaTek Inc.
Unauthorized reproduction or disclosure of this information in whole or in part is strictly prohibited.

0

Bit	31	30	29	28	27	26	25	24	23	22	21	20	19	18	17	16
Name																
Type																
Reset																
Bit	15	14	13	12	11	10	9	8	7	6	5	4	3	2	1	0
Name									RX_DMA_FAULT	RX_OVRUN	RX_UNRUN	RX_THRES	TX_DMA_FAULT	TX_OVRUN	TX_UNRUN	TX_THRES
Type									RW	RW	RW	RW	RW	RW	RW	RW
Reset									0	0	0	0	0	0	0	0

Bit(s)	Name	Description
7	RX_DMA_FAULT	**Rx DMA Fault Detected Interrupt** Asserts when a fault is detected in Rx DMA signals.
6	RX_OVRUN	**Rx Overrun Interrupt** Asserts when the Rx FIFO is overrun.
5	RX_UNRUN	**Rx Underrun Interrupt** Asserts when the Rx FIFO is underrun.
4	RX_THRES	**Rx FIFO Below Threshold Interrupt** Asserts when the Rx FIFO is lower than the defined threshold.
3	TX_DMA_FAULT	**Tx DMA Fault Detected Interrupt** Asserts when a fault is detected in Tx DMA signals.
2	TX_OVRUN	**Tx FIFO Overrun Interrupt** Asserts when the Tx FIFO is overrun.
1	TX_UNRUN	**Tx FIFO Underrun Interrupt** Asserts when the Tx FIFO is underrun.
0	TX_THRES	**Tx FIFO Below Threshold Interrupt** Asserts when the FIFO is lower than the defined threshold.

10000A08 **INT_EN** **Interrupt Enable** **00000000**

Bit	31	30	29	28	27	26	25	24	23	22	21	20	19	18	17	16
Name																
Type																
Reset																
Bit	15	14	13	12	11	10	9	8	7	6	5	4	3	2	1	0
Name									RX_INT3_EN	RX_INT2_EN	RX_INT1_EN	RX_INT0_EN	TX_INT3_EN	TX_INT2_EN	TX_INT1_EN	TX_INT0_EN
Type									RW	RW	RW	RW	RW	RW	RW	RW
Reset									0	0	0	0	0	0	0	0

Bit(s)	Name	Description
7	RX_INT3_EN	**INT_STATUS[7] Enable** Enables the Rx DMA Fault Detected Interrupt. This interrupt asserts when a fault is detected in Rx DMA signals.
6	RX_INT2_EN	**INT_STATUS[6] Enable** Enables the Rx Overrun Interrupt. This interrupt asserts when the Rx FIFO is overrun.
5	RX_INT1_EN	**INT_STATUS[5] Enable**

MEDIATEK CONFIDENTIAL
FOR fairwang@synnex.com.tw USE ONLY

This document contains information that is proprietary to MediaTek Inc.
Unauthorized reproduction or disclosure of this information in whole or in part is strictly prohibited.

Bit(s)	Name	Description
		Enables the Rx Underrun Interrupt. This interrupt asserts when the Rx FIFO is underrun.
4	RX_INT0_EN	**INT_STATUS[4] Enable** Enables the Rx FIFO Below Threshold Interrupt. This interrupt asserts when the Rx FIFO is lower than the defined threshold.
3	TX_INT3_EN	**INT_STATUS[3] Enable** Enables the Tx DMA Fault Detected Interrupt. This interrupt asserts when a fault is detected in Tx DMA signals.
2	TX_INT2_EN	**INT_STATUS[2] Enable** Enables the Tx FIFO Overrun Interrupt. This interrupt asserts when the Tx FIFO is overrun.
1	TX_INT1_EN	**INT_STATUS[1] Enable** Enables the Tx FIFO Underrun Interrupt. This interrupt asserts when the Tx FIFO is underrun.
0	TX_INT0_EN	**INT_STATUS[0] Enable** Enables the Tx FIFO Below Threshold Interrupt. This interrupt asserts when the FIFO is lower than the defined threshold.

10000A0C **FF_STATUS** **FIFO Status** **00000010**

Bit	31	30	29	28	27	26	25	24	23	22	21	20	19	18	17	16
Name																
Type																
Reset																
Bit	15	14	13	12	11	10	9	8	7	6	5	4	3	2	1	0
Name				RX_AVCNT								TX_EPCNT				
Type				RO								RO				
Reset				0	0	0	0	0				1	0	0	0	0

Bit(s)	Name	Description
12:8	RX_AVCNT	**Rx FIFO Available Space Count** Counts the available space for reads in Rx FIFO. (unit: word)
4:0	TX_EPCNT	**Tx FIFO Available Space Count** Counts the available space for writes in Tx FIFO. (unit: word)

10000A10 **TX_FIFO_WREG** **Transmit FIFO Write to Register** **00000000**

Bit	31	30	29	28	27	26	25	24	23	22	21	20	19	18	17	16
Name	TX_FIFO_WDATA[31:16]															
Type	WO															
Reset	0	0	0	0	0	0	0	0	0	0	0	0	0	0	0	0
Bit	15	14	13	12	11	10	9	8	7	6	5	4	3	2	1	0
Name	TX_FIFO_WDATA[15:0]															
Type	WO															
Reset	0	0	0	0	0	0	0	0	0	0	0	0	0	0	0	0

Bit(s)	Name	Description
31:0	TX_FIFO_WDATA	**Tx FIFO Write Data Buffer** Buffers data to be written to the Tx FIFO.

FOR MEDIATEK CONFIDENTIAL
fariwang@symnet.com.tw USE ONLY

This document contains information that is proprietary to MediaTek Inc.
Unauthorized reproduction or disclosure of this information in whole or in part is strictly prohibited.

10000A14 RX_FIFO_RREG Receive FIFO Read Register 00000000

Bit	31	30	29	28	27	26	25	24	23	22	21	20	19	18	17	16
Name	RX_FIFO_RDATA[31:16]															
Type	RO															
Reset	0	0	0	0	0	0	0	0	0	0	0	0	0	0	0	0
Bit	15	14	13	12	11	10	9	8	7	6	5	4	3	2	1	0
Name	RX_FIFO_RDATA[15:0]															
Type	RO															
Reset	0	0	0	0	0	0	0	0	0	0	0	0	0	0	0	0

Bit(s)	Name	Description
31:0	RX_FIFO_RDATA	**Rx FIFO Read Data Buffer** Buffers data read from the Rx FIFO.

10000A18 I2S_CFG1 I2S Configuration 1 00000000

Bit	31	30	29	28	27	26	25	24	23	22	21	20	19	18	17	16
Name	LBK_EN	EXT_LBK_EN														
Type	RW	RW														
Reset	0	0														
Bit	15	14	13	12	11	10	9	8	7	6	5	4	3	2	1	0
Name																I2S_FMT
Type																RW
Reset																0

Bit(s)	Name	Description
31	LBK_EN	**Enables loopback mode.** 0: Normal mode 1: Loopback mode ASYNC_TXFIFIO -> Tx -> Rx -> ASYNC_RXFIFIO
30	EXT_LBK_EN	**Enables external loopback.** 0: Normal mode 1: Enables external loop back. External A/D -> Rx -> Tx -> External D/A
0	I2S_FMT	**I2S audio data format** 0: i2s mode 1: left-justified mode

10000A20 DIVCOMP_CFG Integer Part of the Dividor Register 1 00000000

Bit	31	30	29	28	27	26	25	24	23	22	21	20	19	18	17	16
Name	CLK_EN															
Type	RW															
Reset	0															

MEDIATEK CONFIDENTIAL
FOR farwane@symnex.com.tw USE ONLY

This document contains information that is proprietary to MediaTek Inc.
Unauthorized reproduction or disclosure of this information in whole or in part is strictly prohibited.

Bit	15	14	13	12	11	10	9	8	7	6	5	4	3	2	1	0
Name								DIVCOMP								
Type								RW								
Reset								0	0	0	0	0	0	0	0	0

Bit(s)	Name	Description
31	CLK_EN	**Enables setting of the I2S clock based on DIVCOMP and DIVINT parameters.** 0: Disable 1: Enable
8:0	DIVCOMP	**A parameter in an equation which determines FREQOUT. See DIVINT_CFG.**

10000A28 **DIVINT_CFG** **Integer Part of the Dividor Register 2** **00000000**

Bit	31	30	29	28	27	26	25	24	23	22	21	20	19	18	17	16
Name																
Type																
Reset																
Bit	15	14	13	12	11	10	9	8	7	6	5	4	3	2	1	0
Name							DIVINT									
Type							RW									
Reset							0	0	0	0	0	0	0	0	0	0

Bit(s)	Name	Description
9:0	DIVINT	**Integer Divider** A parameter in an equation which determines FREQOUT: FREQOUT = FREQIN *(1/2) * {1 / [DIVINT+DIVCOMP/(512)]} FREQIN is always fixed to 480 MHz.

MEDIATEK CONFIDENTIAL
FOR farrwang@synnex.com.tw USE ONLY

This document contains information that is proprietary to MediaTek Inc.
Unauthorized reproduction or disclosure of this information in whole or in part is strictly prohibited.

2.12 SPI Controller

2.12.1 Features

- Supports up to 2 SPI master operations
- Programmable clock polarity
- Programmable interface clock rate
- Programmable bit ordering
- Firmware-controlled SPI enable
- Programmable payload (address + data) length
- Supports 1/2/4 multi-IO SPI flash memory
- Supports command/user mode operation
- Supports SPI direct access
- Extends the addressable range from 24 bits to 32 bits for memory size larger than 128 Mb.

2.12.2 Block Diagram

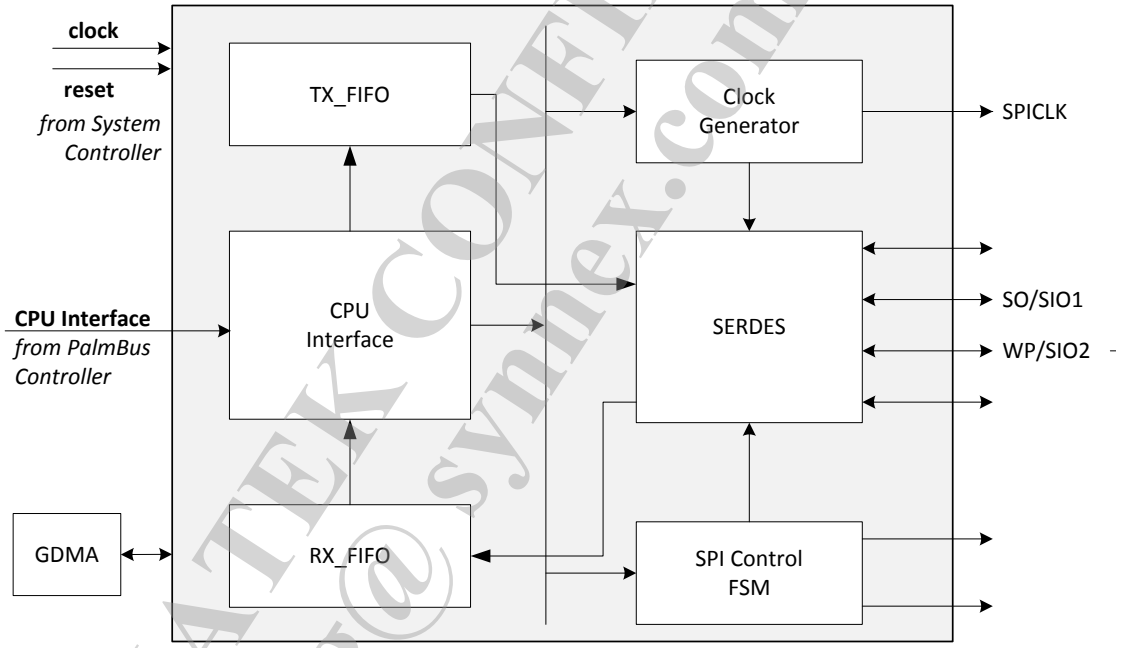

Figure 2-7 SPI Controller Block Diagram

2.12.3 Registers

SPI Changes LOG

Revision	Date	Author	Change Log
0.1	2012/8/29	Lancelot	Initialization
0.2	2012/11/6	Lancelot	1. Remove 0x38 SW_RST 2. Add CS_POLAR at 0x38
0.3	2012/11/23	Lancelot	Fix default value

MEDIATEK CONFIDENTIAL
FOR farrwang@symnex.com.tw USE ONLY

This document contains information that is proprietary to MediaTek Inc.
Unauthorized reproduction or disclosure of this information in whole or in part is strictly prohibited.

Module name: SPI Base address: (+10000B00h)

Address	Name	Width	Register Function
10000B00	SPI_TRANS	32	SPI transaction control/status register
10000B04	SPI_OP_ADDR	32	SPI opcode/address register
10000B08	SPI_DIDO_0	32	SPI DI/DO data #0 register
10000B0C	SPI_DIDO_1	32	SPI DI/DO data #1 register
10000B10	SPI_DIDO_2	32	SPI DI/DO data #2 register
10000B14	SPI_DIDO_3	32	SPI DI/DO data #3 register
10000B18	SPI_DIDO_4	32	SPI DI/DO data #4 register
10000B1C	SPI_DIDO_5	32	SPI DI/DO data #5 register
10000B20	SPI_DIDO_6	32	SPI DI/DO data #6 register
10000B24	SPI_DIDO_7	32	SPI DI/DO data #7 register
10000B28	SPI_MASTER	32	SPI master mode register
10000B2C	SPI_MORE_BUF	32	SPI more buf control register
10000B30	SPI_QUEUE_CTL	32	SPI flash queue control register
10000B34	SPI_STATUS	32	SPI controller status register
10000B38	SPI_CS_POLAR	32	SPI chip select polarity
10000B3C	SPI_SPACE	32	SPI flash space control register

10000B00 SPI_TRANS SPI transaction control/status register **00160001**

Bit	31	30	29	28	27	26	25	24	23	22	21	20	19	18	17	16
Name	spi_addr_ext								Reserved0			spi_addr_size		Reserved1		spi_master_busy
Type	RW								RO			RW		RO		RO
Reset	0	0	0	0	0	0	0	0	0	0	0	1	0	1	1	0
Bit	15	14	13	12	11	10	9	8	7	6	5	4	3	2	1	0
Name	Reserved2							spi_master_start	miso_byte_cnt				mosi_byte_cnt			
Type	RO							WO	RW				RW			
Reset	0	0	0	0	0	0	0	0	0	0	0	0	0	0	0	1

Bit(s)	Name	Description
31:24	spi_addr_ext	**SPI address extention** Address extenstion for 32-bit SPI address size. Usually this field specifies the first byte of the address phase to transmit to SPI device when more_buf_mode = 0 and spi_addr_size = 3. And spi_addr[31:24], spi_addr[23:16], and spi_addr[15:0] are respectively the second, third and fourth byte of the address phase
20:19	spi_addr_size	**SPI address size.**

MEDIATEK CONFIDENTIAL
FOR farrwang@symnex.com.tw USE ONLY

This document contains information that is proprietary to MediaTek Inc.
Unauthorized reproduction or disclosure of this information in whole or in part is strictly prohibited.

Bit(s)	Name	Description
		0: reserved. 1: spi_addr[15:0] of SPI DI data register are valid (16-bit size). 2: spi_addr[23:0] of SPI DI data register are valid (24-bit size). 3: {spi_addr_ext[7:0], spi_addr[23:0]} of SPI DI data register are valid (32-bit size) Note: The spi_addr_size is valid only when more_buf_mode = 0.
16	spi_master_busy	**Transaction busy indication (Read-only). Writes to this bit are ignored.** 0: No SPI transaction is ongoing. Software may start a new SPI transaction by writing to the SPI transaction start bit within this register. 1: An SPI transaction presently is underway. Software must not try to start a new SPI transaction. Software may not alter the value of any field of the SPI master control registers.
8	spi_master_start	**SPI transaction start. Only writes to this field are meaningful, reads always return 0.** Writes: 0: No effect 1: Starts SPI transaction.
7:4	miso_byte_cnt	**SPI MISO (rx) byte count.** Determines the number of bytes received from the SPI device from the SPI opcode/address register and the SPI DI/DO data #0 register. Values of 0 ~ 8 are valid, other values are illegal. Note: The miso_byte_cnt is valid only when more_buf_mode = 0.
3:0	mosi_byte_cnt	**SPI MOSI (tx) byte count.** Determines the number of bytes transmitted from the SPI opcode/address register and the SPI DI/DO data #0 register to the SPI device. Values of 1 ~ 8 are valid, other values are illegal. Note: The mosi_byte_cnt is valid only when more_buf_mode = 0. The transmitted data sequence is as follows: spi_opcode, spi_addr (conditional) and d0_byte ~ d3_byte (conditional).

10000B04 **SPI_OP_ADDR** **SPI opcode/address register** **00000000**

Bit	31	30	29	28	27	26	25	24	23	22	21	20	19	18	17	16
Name	spi_addr[23:8]															
Type	RW															
Reset	0	0	0	0	0	0	0	0	0	0	0	0	0	0	0	0
Bit	15	14	13	12	11	10	9	8	7	6	5	4	3	2	1	0
Name	spi_addr[7:0]								spi_opcode							
Type	RW								RW							
Reset	0	0	0	0	0	0	0	0	0	0	0	0	0	0	0	0

Bit(s)	Name	Description
31:8	spi_addr	**SPI address. Usually this field specifies the 24-bits address to transmit to the SPI device when more_buf_mode = 0.** 1: (16-bits SPI address size), spi_addr[23:16] is the 1st byte of the address phase and spi_addr[15:8] is the 2nd byte of the address phase. 2: (24-bits SPI address size), spi_addr[31:24] is the 1st byte of the address phase and spi_addr[23:16] is the 2nd byte of the address phase and spi_addr[15:8] is the 3rd byte of the address phase. 3: (32-bits SPI address size), spi_addr[31:24] is the 2nd byte of the address phase and spi_addr[23:16] is the 3rd byte of the address phase and spi_addr[15:8] is the 4th byte of the address phase Note: For SPI read transaction and more_buf_mode = 0 Field [15:8] is also used to store the 6-th byte of data read phase. Field [23:16] is also used to store the 7-th byte of data read phase. Field [31:24] is also used to store the 8-th byte of data read phase.

MEDIATEK CONFIDENTIAL
FOR farrwang@symmetricom.tw USE ONLY

This document contains information that is proprietary to MediaTek Inc.
Unauthorized reproduction or disclosure of this information in whole or in part is strictly prohibited.

Bit(s)	Name	Description
7:0	spi_opcode	**SPI opcode. Usually this field specifies the 8-bits opcode (instruction) to transmit to the SPI device as the first byte of a SPI transaction when more_buf_mode = 0.** Note: For SPI read transaction and more_buf_mode = 0, this byte is also used to store the 5-th byte of data read phase according to the rx byte count miso_byte_cnt.

10000B08 **SPI_DIDO_0** **SPI DI/DO data #0 register** **00000000**

Bit	31	30	29	28	27	26	25	24	23	22	21	20	19	18	17	16
Name	d3_byte								d2_byte							
Type	RW								RW							
Reset	0	0	0	0	0	0	0	0	0	0	0	0	0	0	0	0
Bit	15	14	13	12	11	10	9	8	7	6	5	4	3	2	1	0
Name	d1_byte								d0_byte							
Type	RW								RW							
Reset	0	0	0	0	0	0	0	0	0	0	0	0	0	0	0	0

Bit(s)	Name	Description
31:24	d3_byte	**The 4th data byte of data read/write phase.**
23:16	d2_byte	**The 3th data byte of data read/write phase.**
15:8	d1_byte	**The 2nd data byte of data read/write phase.**
7:0	d0_byte	**The 1st data byte of data read/write phase.**

10000B0C **SPI_DIDO_1** **SPI DI/DO data #1 register** **00000000**

Bit	31	30	29	28	27	26	25	24	23	22	21	20	19	18	17	16
Name	d3_byte								d2_byte							
Type	RW								RW							
Reset	0	0	0	0	0	0	0	0	0	0	0	0	0	0	0	0
Bit	15	14	13	12	11	10	9	8	7	6	5	4	3	2	1	0
Name	d1_byte								d0_byte							
Type	RW								RW							
Reset	0	0	0	0	0	0	0	0	0	0	0	0	0	0	0	0

Bit(s)	Name	Description
31:24	d3_byte	**The 4th data byte of data read/write phase.**
23:16	d2_byte	**The 3th data byte of data read/write phase.**
15:8	d1_byte	**The 2nd data byte of data read/write phase.**
7:0	d0_byte	**The 1st data byte of data read/write phase.**

10000B10 **SPI_DIDO_2** **SPI DI/DO data #2 register** **00000000**

Bit	31	30	29	28	27	26	25	24	23	22	21	20	19	18	17	16
Name	d3_byte								d2_byte							
Type	RW								RW							
Reset	0	0	0	0	0	0	0	0	0	0	0	0	0	0	0	0
Bit	15	14	13	12	11	10	9	8	7	6	5	4	3	2	1	0
Name	d1_byte								d0_byte							

MEDIATEK CONFIDENTIAL
FOR fairwang@symnex.com.tw USE ONLY

This document contains information that is proprietary to MediaTek Inc.
Unauthorized reproduction or disclosure of this information in whole or in part is strictly prohibited.

Type	RW								RW							
Reset	0	0	0	0	0	0	0	0	0	0	0	0	0	0	0	0

Bit(s)	Name	Description
31:24	d3_byte	**The 4th data byte of data read/write phase.**
23:16	d2_byte	**The 3th data byte of data read/write phase.**
15:8	d1_byte	**The 2nd data byte of data read/write phase.**
7:0	d0_byte	**The 1st data byte of data read/write phase.**

10000B14 SPI_DIDO_3 SPI DI/DO data #3 register 00000000

Bit	31	30	29	28	27	26	25	24	23	22	21	20	19	18	17	16
Name	d3_byte								d2_byte							
Type	RW								RW							
Reset	0	0	0	0	0	0	0	0	0	0	0	0	0	0	0	0
Bit	15	14	13	12	11	10	9	8	7	6	5	4	3	2	1	0
Name	d1_byte								d0_byte							
Type	RW								RW							
Reset	0	0	0	0	0	0	0	0	0	0	0	0	0	0	0	0

Bit(s)	Name	Description
31:24	d3_byte	**The 4th data byte of data read/write phase.**
23:16	d2_byte	**The 3th data byte of data read/write phase.**
15:8	d1_byte	**The 2nd data byte of data read/write phase.**
7:0	d0_byte	**The 1st data byte of data read/write phase.**

10000B18 SPI_DIDO_4 SPI DI/DO data #4 register 00000000

Bit	31	30	29	28	27	26	25	24	23	22	21	20	19	18	17	16
Name	d3_byte								d2_byte							
Type	RW								RW							
Reset	0	0	0	0	0	0	0	0	0	0	0	0	0	0	0	0
Bit	15	14	13	12	11	10	9	8	7	6	5	4	3	2	1	0
Name	d1_byte								d0_byte							
Type	RW								RW							
Reset	0	0	0	0	0	0	0	0	0	0	0	0	0	0	0	0

Bit(s)	Name	Description
31:24	d3_byte	**The 4th data byte of data read/write phase.**
23:16	d2_byte	**The 3th data byte of data read/write phase.**
15:8	d1_byte	**The 2nd data byte of data read/write phase.**
7:0	d0_byte	**The 1st data byte of data read/write phase.**

10000B1C SPI_DIDO_5 SPI DI/DO data #5 register 00000000

Bit	31	30	29	28	27	26	25	24	23	22	21	20	19	18	17	16
Name	d3_byte								d2_byte							
Type	RW								RW							
Reset	0	0	0	0	0	0	0	0	0	0	0	0	0	0	0	0

MEDIATEK CONFIDENTIAL
FOR farrwang@synnex.com.tw USE ONLY

This document contains information that is proprietary to MediaTek Inc.
Unauthorized reproduction or disclosure of this information in whole or in part is strictly prohibited.

Bit	15	14	13	12	11	10	9	8	7	6	5	4	3	2	1	0
Name	d1_byte								d0_byte							
Type	RW								RW							
Reset	0	0	0	0	0	0	0	0	0	0	0	0	0	0	0	0

Bit(s)	Name	Description
31:24	d3_byte	**The 4th data byte of data read/write phase.**
23:16	d2_byte	**The 3th data byte of data read/write phase.**
15:8	d1_byte	**The 2nd data byte of data read/write phase.**
7:0	d0_byte	**The 1st data byte of data read/write phase.**

10000B20 SPI_DIDO_6 SPI DI/DO data #6 register 00000000

Bit	31	30	29	28	27	26	25	24	23	22	21	20	19	18	17	16
Name	d3_byte								d2_byte							
Type	RW								RW							
Reset	0	0	0	0	0	0	0	0	0	0	0	0	0	0	0	0
Bit	15	14	13	12	11	10	9	8	7	6	5	4	3	2	1	0
Name	d1_byte								d0_byte							
Type	RW								RW							
Reset	0	0	0	0	0	0	0	0	0	0	0	0	0	0	0	0

Bit(s)	Name	Description
31:24	d3_byte	**The 4th data byte of data read/write phase.**
23:16	d2_byte	**The 3th data byte of data read/write phase.**
15:8	d1_byte	**The 2nd data byte of data read/write phase.**
7:0	d0_byte	**The 1st data byte of data read/write phase.**

10000B24 SPI_DIDO_7 SPI DI/DO data #7 register 00000000

Bit	31	30	29	28	27	26	25	24	23	22	21	20	19	18	17	16
Name	d3_byte								d2_byte							
Type	RW								RW							
Reset	0	0	0	0	0	0	0	0	0	0	0	0	0	0	0	0
Bit	15	14	13	12	11	10	9	8	7	6	5	4	3	2	1	0
Name	d1_byte								d0_byte							
Type	RW								RW							
Reset	0	0	0	0	0	0	0	0	0	0	0	0	0	0	0	0

Bit(s)	Name	Description
31:24	d3_byte	**The 4th data byte of data read/write phase.**
23:16	d2_byte	**The 3th data byte of data read/write phase.**
15:8	d1_byte	**The 2nd data byte of data read/write phase.**
7:0	d0_byte	**The 1st data byte of data read/write phase.**

10000B28 SPI_MASTER SPI master mode register 000D8880

Bit	31	30	29	28	27	26	25	24	23	22	21	20	19	18	17	16
Name	rs_slave_sel			clk_	rs_clk_sel											

MEDIATEK CONFIDENTIAL
FOR farrwang@synnex.com.tw USE ONLY

This document contains information that is proprietary to MediaTek Inc.
Unauthorized reproduction or disclosure of this information in whole or in part is strictly prohibited.

				mode												
Type	RW			RW	RW											
Reset	0	0	0	0	0	0	0	0	0	0	0	0	1	1	0	1
Bit	15	14	13	12	11	10	9	8	7	6	5	4	3	2	1	0
Name	cs_dsel_cnt					full_duplex	int_en	spi_start_sel	spi_prefetch	bidir_mode	cpha	cpol	lsb_first	more_buf_mode	serial_mode	
Type	RW					RW	RW	RW	RW	RW	RW	RW	RW	RW	RW	
Reset	1	0	0	0	1	0	0	0	1	0	0	0	0	0	0	0

Bit(s)	Name	Description
31:29	rs_slave_sel	**select SPI device** 0: select SPI device 0 (default is flash) 1: select SPI device 1 ... 7: select SPI device 7
28	clk_mode	**This register is used to specify that period of SCLK HIGH is longer or period of SCLK LOW is longer when clock divisor(clk_sel) is odd.** 0: period of SCLK LOW is longer. 1: period of SCLL HIGH is longer.
27:16	rs_clk_sel	**Register Space SPI clock frequency select.** 0: SPI clock frequency is hclk/2. (50% duty cycle, duty cycle is the ratio of the output high time to the total cycle time) 1: SPI clock frequency is hclk/3. (33.33% or 66.67% duty cycle) 2: SPI clock frequency is hclk/4. (50% duty cycle) 3: SPI clock frequency is hclk/5. (40% or 60% duty cycle) 4095: SPI clock frequency is hclk/4097.
15:11	cs_dsel_cnt	**De-select time of SPI chip select is configured to occupy the number of cycles of AHB clock**
10	full_duplex	**Full duplex or half duplex mode.** 0: half duplex mode. 1: full duplex mode. Full duplex timing diagram Note: The full_duplex is valid only when more_buf_mode = 1. The transmission is always as half duplex when more_buf_mode = 0;
9	int_en	**Interrupt enable.** 0: disable SPI interrupt. 1: enable SPI interrupt.
8	spi_start_sel	**The interval between spi_cs_n and spi_sclk.** 0: 3 clk 1: 6 clk
7	spi_prefetch	**SPI pre-fetch buffer enable** 0: disable pre-fetch buffer. 1: enable pre-fetch buffer.
6	bidir_mode	**Bi-direction mode. In this mode, the SPI uses only one serial data pin for interface with external devices. The MOSI pin becomes the serial data I/O pin for the SPI transaction and MISO pin is not used. Bi-direction mode is used for the application with only 1 bi-direction serial pin for SPI transaction.** 0: normal mode (both MOSI and MISO pins are used). 1: bi-direction mode (only MOSI pin is used). SPI host controller must operate in half duplex mode if bidir_mode = 1. Note: The bidir_mode is valid only when more_buf_mode = 1.
5	cpha	**(CPHA, clock phase). Initial SPI clock phase for SPI transaction.** There are four SPI modes used to latch data. These SPI modes latch data in

MEDIATEK CONFIDENTIAL
FOR farrwang@emtea.com.tw USE ONLY

This document contains information that is proprietary to MediaTek Inc.
Unauthorized reproduction or disclosure of this information in whole or in part is strictly prohibited.

Bit(s)	Name	Description
		one of four ways, and are defined by the logic state combinations of the CLK Polarity (CPOL) in relation to the CLK Phase (CPHA). The valid logic combinations identify and determine the SPI modes supported by the SPI device. SPI mode At CPOL=0 the base value of the clock is zero For CPHA=0 (mode 0), data is read on the clock's rising edge and data is changed on a falling edge. For CPHA=1 (mode 1), data is read on the clock's falling edge and data is changed on a rising edge. At CPOL=1 the base value of the clock is one (inversion of CPOL=0) For CPHA=0 (mode 2), data is read on clock's falling edge and data is changed on a rising edge. For CPHA=1 (mode 3), data is read on clock's rising edge and data is changed on a falling edge.
4	cpol	**cpol (CPOL, clock polarity). Initial SPI clock polarity for SPI transaction.**
3	lsb_first	**0: MSB(most significant bit) is transferred first for SPI transaction.** 1: LSB(least significant bit) is transferred first for SPI transaction.
2	more_buf_mode	**Select 2 words buffer or 8 words buffer for SPI transaction.** 0: SPI transfer data buffer size is only 2 words. In this mode, SPI DI/DO data #0 register and SPI opcode/address register are the data buffer for SPI transaction. And, SPI master follows mosi_byte_cnt and miso_byte_cnt to complete the transmission and reception, respectively. This kind of transaction must operate in half duplex mode. 1: SPI transfer data buffer size is 8 words. In this mode, SPI opcode/address register are the data buffer for SPI transaction and follows cmd_bit_cnt to complete the transaction. SPI DI/DO data #0~#7 register are the data buffer for SPI transaction and follows do_bit_cnt and di_bit_cnt to complete the transmission and reception, respectively. In half duplex mode, transmitted data are loaded from SPI opcode/address register and SPI DI/DO data #0~#7 registers. And, the received data will overwrite the SPI DI/DO data #0~#7 registers. In full duplex mode, SPI DI/DO data #0~#3 registers are used for transmission and SPI DI/DO #4~#7 registers are used for receipt.
1:0	serial_mode	**This mode is designed for Winbond SPI flash W25Q80/16/32 and W25X10/20/40/80/16/32/64 series.** 0: standard serial. 1: dual serial. 2: quad serial. 3: reserved. Note: The serial_mode is valid only when more_buf_mode = 0. The transaction mode is always as standard serial when more_buf_mode = 1.

10000B2C **SPI_MORE_BUF** **SPI more buf control register** **00000000**

Bit	31	30	29	28	27	26	25	24	23	22	21	20	19	18	17	16
Name	Reserved0				cmd_bit_cnt				Reserved1			miso_bit_cnt[8:4]				
Type	RO				RW				RO			RW				
Reset	0	0	0	0	0	0	0	0	0	0	0	0	0	0	0	0
Bit	15	14	13	12	11	10	9	8	7	6	5	4	3	2	1	0
Name	miso_bit_cnt[3:0]				Reserved2			mosi_bit_cnt								
Type	RW				RO			RW								
Reset	0	0	0	0	0	0	0	0	0	0	0	0	0	0	0	0

Bit(s)	Name	Description

FOR MEDIATEK INTERNAL USE ONLY
FOR fatwang@sysnet.com.tw USE ONLY

This document contains information that is proprietary to MediaTek Inc.
Unauthorized reproduction or disclosure of this information in whole or in part is strictly prohibited.

Bit(s)	Name	Description
29:24	cmd_bit_cnt	**SPI command phase MOSI (tx) bit count. Determines the number of command bits transmitted from the SPI opcode/address register to the SPI device. Values of 0 ~ 32 are valid, but other values are illegal.** Note: The cmd_bit_cnt is valid only when more_buf_mode = 1 and the SPI opcode/address register is treated as a command register.
20:12	miso_bit_cnt	**SPI data phase MISO (rx) bit count. Determines the number of bits received from the SPI device into the SPI DI/DO data #0~#7 register. Values of 0 ~ 256 are valid, but other values are illegal. Maximum value is 256 for half duplex mode and 128 for full duplex mode. Please note that do_bit_cnt must be equal to di_bit_cnt in full duplex mode.** Note: The miso_bit_cnt is valid only when more_buf_mode = 1.
8:0	mosi_bit_cnt	**SPI data phase MOSI (tx) bit count. Determines the number of data bits transmitted from the SPI DI/DO data #0~#7 register to the SPI device. Values of 0 ~ 256 are valid, but other values are illegal. Maximum value is 256 for half duplex mode and 128 for full duplex mode.** Note: The mosi_bit_cnt is valid only when more_buf_mode = 1.

10000B30 **SPI_QUEUE_CTL** **SPI flash queue control register** **00000E40**

Bit	31	30	29	28	27	26	25	24	23	22	21	20	19	18	17	16
Name	fs_page_sel						Reserved0[12:3]									
Type	RW						RO									
Reset	0	0	0	0	0	0	0	0	0	0	0	0	0	0	0	0
Bit	15	14	13	12	11	10	9	8	7	6	5	4	3	2	1	0
Name	Reserved0[2:0]			fs_busy	fs_addr_size_r		fs_addr_size		fs_di_ph_byc				Reserved1	fast_spi_sel		
Type	RO			RO	RO		RW		RW				RO	RW		
Reset	0	0	0	0	1	1	1	0	0	1	0	0	0	0	0	0

Bit(s)	Name	Description
31:26	fs_page_sel	**Flash Space Page Selection.** 0: (Page 0 space) 0x0000_0000 - 0x03ff_ffff 1: (Page 1 space) 0x0400_0000 - 0x07ff_ffff ... 63: (Page 63 space) 0xffc0_0000 - 0xffff_ffff
12	fs_busy	**Transaction busy indication (Read-only) in flash space. Writes to this bit are ignored.** 0: No SPI flash space access is ongoing. Software may change the configuration related to flash space. 1: SPI flash space access presently is underway. Software may not alter the configuration related to flash space.
11:10	fs_addr_size_r	**Latched fs_addr_size indication from internal spimc logic**
9:8	fs_addr_size	**SPI address. This field specifies the 24-bits/16-bits address to transmit to the SPI device for SPI Flash Space Read operation only.** 0: 25-bit SPI address size 1: 16-bit SPI address size Reserved. 2: 24-bit SPI address size (default for 3B SPI flash) 3: 26-bit SPI address size (default for 4B SPI flash) If the change of the fs_addr_size is needed, the sequence below must be followed. Otherwise, the new fs_addr_size configuration will not be updated to the internal spimc logic . Step 1: Set new fs_addr_size. Step 2: Transmit mode change command (ex. En4B or Ex4B of MX25L25635E) Note: 1. The value fs_addr_size is not valid in Register Space.

MEDIATEK CONFIDENTIAL
FOR farrwang@mtex.com.tw USE ONLY

This document contains information that is proprietary to MediaTek Inc.
Unauthorized reproduction or disclosure of this information in whole or in part is strictly prohibited.

Bit(s)	Name	Description
		2. The Spimc now only supports 3-Byte mode (24 bits) and 4-Byte mode (25 or 26 bits) switch.
7:4	fs_di_ph_byc	**Determines the number of data bytes transmitted from the SPI master controller to the SPI device for SPI Flash Space Read operation. This field is similar to mosi_byte_cnt in STCSR but is used for setting of flash space access control path.** Note: this field should (if fs_addr_size_r = 2, 24-bit fs_addr_size) = 4 (OP + ADDR) if fast_spi_sel = 0 (0x03) = 5 (OP + ADDR + dummy) if fast_spi_sel = 1 (0x0b) = 5 (OP + ADDR + dummy) if fast_spi_sel = 2 (0x3b) = 5 (OP + ADDR + M7-0) if fast_spi_sel = 3 (0xbb) = 5 (OP + ADDR + dummy) if fast_spi_sel = 4 (0x6b) = 7 (OP + ADDR + M7-0 + dummy) if fast_spi_sel = 5 (0xeb) = 5 (OP + ADDR + M7-0) if fast_spi_sel = 6 (0xe3) (if fs_addr_size_r = 0 or 3, 25 or 26-bit fs_addr_size) = 5 (OP + ADDR) if fast_spi_sel = 0 (0x03) = 6 (OP + ADDR + dummy) if fast_spi_sel = 1 (0x0b) = 6 (OP + ADDR + dummy) if fast_spi_sel = 2 (0x3b) = 6 (OP + ADDR + M7-0) if fast_spi_sel = 3 (0xbb) = 6 (OP + ADDR + dummy) if fast_spi_sel = 4 (0x6b) = 8 (OP + ADDR + M7-0 + dummy) if fast_spi_sel = 5 (0xeb) = 6 (OP + ADDR + M7-0) if fast_spi_sel = 6 (0xe3)
2:0	fast_spi_sel	**Select SPI flash read instruction for Flash Space** 0: standard read data instruction (0x03). 1: standard fast read data instruction (0x0b). 2: fast read dual output instruction defined in Winbond W25Qxx series SPI flash (0x03b). 3: fast read dual I/O instruction defined in Winbond W25Qxx series SPI flash (0xbb). 4: fast read quad output instruction defined in Winbond W25Qxx series SPI flash (0x6b). 5: fast read quad I/O instruction defined in Winbond W25Qxx series SPI flash (0xeb). 6: burst read quad I/O instruction defined in Winbond W25Qxx series SPI flash (0xe3). Note: serial_mode and more_buf_mode are don't care for this flash space access control path.

10000B34 **SPI_STATUS** **SPI controller status register** **00000030**

Bit	31	30	29	28	27	26	25	24	23	22	21	20	19	18	17	16
Name	Reserved0[25:10]															
Type	RO															
Reset	0	0	0	0	0	0	0	0	0	0	0	0	0	0	0	0
Bit	15	14	13	12	11	10	9	8	7	6	5	4	3	2	1	0
Name	Reserved0[9:0]										spi_flash_mode		Reserved1			spi_ok
Type	RO										RO		RO			RC
Reset	0	0	0	0	0	0	0	0	0	0	1	1	0	0	0	0

Bit(s)	Name	Description
5:4	spi_flash_mode	**0: no SPI flash.** 1: standard SPI flash. 2: specific SPI flash with dual interface capability. 3: specific SPI flash with quad interface capability.

MEDIATEK CONFIDENTIAL
FOR fanrwang@synnex.com.tw USE ONLY

This document contains information that is proprietary to MediaTek Inc.
Unauthorized reproduction or disclosure of this information in whole or in part is strictly prohibited.

Bit(s)	Name	Description
0	spi_ok	**When SPI transaction complete, SPI master controller will set this bit and assert SPI interrupt to notify software. Reading this register will clear this bit and de-assert SPI interrupt.**

10000B38 **SPI_CS_POLAR** **SPI chip select polarity** **00000000**

Bit	31	30	29	28	27	26	25	24	23	22	21	20	19	18	17	16
Name																
Type																
Reset																
Bit	15	14	13	12	11	10	9	8	7	6	5	4	3	2	1	0
Name									cs_polar							
Type									RW							
Reset									0	0	0	0	0	0	0	0

Bit(s)	Name	Description
7:0	cs_polar	**Chip select default polarity** set cs_polar[n]=1'b0 for cs[n] low active (SPI Flash) set cs_polar[n]=1'b1 for cs[n] high active

10000B3C **SPI_SPACE** **SPI flash space control register** **00000030**

Bit	31	30	29	28	27	26	25	24	23	22	21	20	19	18	17	16
Name	Reserved[16:1]															
Type	RO															
Reset	0	0	0	0	0	0	0	0	0	0	0	0	0	0	0	0
Bit	15	14	13	12	11	10	9	8	7	6	5	4	3	2	1	0
Name	Reserved[0:0]	fs_slave_sel			fs_clk_sel											
Type	RO	RW			RW											
Reset	0	0	0	0	0	0	0	0	0	0	1	1	0	0	0	0

Bit(s)	Name	Description
14:12	fs_slave_sel	**(Flash Space Slave Select)** 0: select SPI device #0. (default is flash) 1: select SPI device #1. ... 7: select SPI device #7.
11:0	fs_clk_sel	**Flash Space SPI clock frequency select.** 0: SPI clock frequency is hclk/2. (50% duty cycle, duty cycle is the ratio of the output high time to the total cycle time) 1: SPI clock frequency is hclk/3. (33.33% or 66.67% duty cycle) 2: SPI clock frequency is hclk/4. (50% duty cycle) 3: SPI clock frequency is hclk/5. (40% or 60% duty cycle) 4095: SPI clock frequency is hclk/4097.

MEDIATEK CONFIDENTIAL
FOR farrwang@synnex.com.tw USE ONLY

This document contains information that is proprietary to MediaTek Inc.
Unauthorized reproduction or disclosure of this information in whole or in part is strictly prohibited.

2.13 UART Lite

2.13.1 Features

- 2-pin UART
- 16550-compatible register set, except for Divisor Latch register
- 5-8 data bits
- 1-2 stop bits (1 or 2 stop bits are supported with 5 data bits)
- Even, odd, stick or no parity
- All standard baud rates up to 345600 b/s
- 16-byte receive buffer
- 16-byte transmit buffer
- Receive buffer threshold interrupt
- Transmit buffer threshold interrupt
- False start bit detection in asynchronous mode
- Internal diagnostic capabilities
- Break simulation
- Loop-back control for communications link fault isolation

2.13.2 Registers

n = 1; for uart1 only.

UARTn+0000h RX Buffer Register — UARTn_RBR

Bit	15	14	13	12	11	10	9	8	7	6	5	4	3	2	1	0
Name									RBR[7:0]							
Type									RO							

RBR RX Buffer Register. Read-only register. The received data can be read by accessing this register.
Modified when LCR[7] = 0.

UARTn+0000h TX Holding Register — UARTn_THR

Bit	15	14	13	12	11	10	9	8	7	6	5	4	3	2	1	0
Name									THR[7:0]							
Type									WO							

THR TX Holding Register. Write-only register. The data to be transmitted is written to this register, and then sent to the PC via serial communication.
Modified when LCR[7] = 0.

UARTn+0004h Interrupt Enable Register — UARTn_IER

Bit	15	14	13	12	11	10	9	8	7	6	5	4	3	2	1	0
Name									CTSI	RTSI	XOFFI	X	EDSSI	ELSI	ETBEI	ERBFI
Type									R/W							
Reset									0							

IER By storing a '1' to a specific bit position, the interrupt associated with that bit is enabled. Otherwise, the interrupt is disabled.
IER[3:0] are modified when LCR[7] = 0.
IER[7:4] are modified when LCR[7] = 0 & EFR[4] = 1.

CTSI Masks an interrupt that is generated when a rising edge is detected on the CTS modem control line.
Note: This interrupt is only enabled when hardware flow control is enabled.

MEDIATEK CONFIDENTIAL
FOR fairwang@symnex.com.tw USE ONLY

This document contains information that is proprietary to MediaTek Inc.
Unauthorized reproduction or disclosure of this information in whole or in part is strictly prohibited.

0 Unmask an interrupt that is generated when a rising edge is detected on the CTS modem control line.

1 Mask an interrupt that is generated when a rising edge is detected on the CTS modem control line.

RTSI Masks an interrupt that is generated when a rising edge is detected on the RTS modem control line.

Note*:* This interrupt is only enabled when hardware flow control is enabled.

0 Unmask an interrupt that is generated when a rising edge is detected on the RTS modem control line.

1 Mask an interrupt that is generated when a rising edge is detected on the RTS modem control line.

XOFFI Masks an interrupt that is generated when an XOFF character is received.

Note*:* This interrupt is only enabled when software flow control is enabled.

0 Unmask an interrupt that is generated when an XOFF character is received.

1 Mask an interrupt that is generated when an XOFF character is received.

EDSSI When set ("1"), an interrupt is generated if DDCD, TERI, DDSR or DCTS (MSR[4:1]) becomes set.

0 No interrupt is generated if DDCD, TERI, DDSR or DCTS (MSR[4:1]) becomes set.

1 An interrupt is generated if DDCD, TERI, DDSR or DCTS (MSR[4:1]) becomes set.

ELSI When set ("1"), an interrupt is generated if BI, FE, PE or OE (LSR[4:1]) becomes set.

0 No interrupt is generated if BI, FE, PE or OE (LSR[4:1]) becomes set.

1 An interrupt is generated if BI, FE, PE or OE (LSR[4:1]) becomes set.

ETBEI When set ("1"), an interrupt is generated if the TX Holding Register is empty or the contents of the TX FIFO

have been reduced to its Trigger Level.

0 No interrupt is generated if the TX Holding Register is empty or the contents of the TX FIFO have been reduced to its Trigger Level.

1 An interrupt is generated if the TX Holding Register is empty or the contents of the TX FIFO have been reduced to its Trigger Level

ERBFI When set ("1"), an interrupt is generated if the RX Buffer contains data.

0 No interrupt is generated if the RX Buffer contains data.

1 An interrupt is generated if the RX Buffer contains data.

UARTn+0008h Interrupt Identification Register UARTn_IIR

Bit	15	14	13	12	11	10	9	8	7	6	5	4	3	2	1	0
Name									FIFOE		ID4	ID3	ID2	ID1	ID0	NINT
Type									RO							
Reset									0	0	0	0	0	0	0	1

IIR Identify if there are pending interrupts; ID4 and ID3 are presented only when EFR[4] = 1.

The following table gives the IIR[5:0] codes associated with the possible interrupts:

IIR[5:0]	Priority Level	Interrupt	Source
000001	-	No interrupt pending	
000110	1	Line Status Interrupt	BI, FE, PE or OE set in LSR
000100	2	RX Data Received	RX Data received or RX Trigger Level reached.
001100	2	RX Data Timeout	Timeout on character in RX FIFO.
000010	3	TX Holding Register Empty	TX Holding Register empty or TX FIFO Trigger Level reached.
000000	4	Modem Status change	DDCD, TERI, DDSR or DCTS set in MSR

FOR tarrwang@symnex.com.tw
MEDIATEK CONFIDENTIAL USE ONLY

This document contains information that is proprietary to MediaTek Inc.
Unauthorized reproduction or disclosure of this information in whole or in part is strictly prohibited.

010000	5	Software Flow Control	XOFF Character received
100000	6	Hardware Flow Control	CTS or RTS Rising Edge

Table 1 The IIR[5:0] codes associated with the possible interrupts

Line Status Interrupt: A RX Line Status Interrupt (IIR[5:0`] == 000110b) is generated if ELSI (IER[2]) is set and any of BI, FE, PE or OE (LSR[4:1]) becomes set. The interrupt is cleared by reading the Line Status Register.
RX Data Received Interrupt: A RX Received interrupt (IER[5:0] == 000100b) is generated if EFRBI (IER[0]) is set and either RX Data is placed in the RX Buffer Register or the RX Trigger Level is reached. The interrupt is cleared by reading the RX Buffer Register or the RX FIFO (if enabled).
RX Data Timeout Interrupt:
When virtual FIFO mode is disabled, RX Data Timeout Interrupt is generated if all of the following apply:

1. FIFO contains at least one character;
2. The most recent character was received longer than four character periods ago (including all start, parity and stop bits);
3. The most recent CPU read of the FIFO was longer than four character periods ago.

The timeout timer is restarted on receipt of a new byte from the RX Shift Register, or on a CPU read from the RX FIFO.
The RX Data Timeout Interrupt is enabled by setting EFRBI (IER[0]) to 1, and is cleared by reading RX FIFO.
When virtual FIFO mode is enabled, RX Data Timeout Interrupt is generated if all of the following apply:

1. FIFO is empty;
2. The most recent character was received longer than four character periods ago (including all start, parity and stop bits);
3. The most recent CPU read of the FIFO was longer than four character periods ago.

The timeout timer is restarted on receipt of a new byte from the RX Shift Register.
RX Holding Register Empty Interrupt: A TX Holding Register Empty Interrupt (IIR[5:0] = 000010b) is generated if ETRBI (IER[1]) is set and either the TX Holding Register or, if FIFOs are enabled, the TX FIFO becomes empty. The interrupt is cleared by writing to the TX Holding Register or TX FIFO if FIFO enabled.
Modem Status Change Interrupt: A Modem Status Change Interrupt (IIR[5:0] = 000000b) is generated if EDSSI (IER[3]) is set and either DDCD, TERI, DDSR or DCTS (MSR[3:0]) becomes set. The interrupt is cleared by reading the Modem Status Register.
Software Flow Control Interrupt: A Software Flow Control Interrupt (IIR[5:0] = 010000b) is generated if Software Flow Control is enabled and XOFFI (IER[5]) becomes set, indicating that an XOFF character has been received. The interrupt is cleared by reading the Interrupt Identification Register.
Hardware Flow Control Interrupt: A Hardware Flow Control Interrupt (IER[5:0] = 100000b) is generated if Hardware Flow Control is enabled and either RTSI (IER[6]) or CTSI (IER[7]) becomes set indicating that a rising edge has been detected on either the RTS/CTS Modem Control line. The interrupt is cleared by reading the Interrupt Identification Register.

UARTn+0008h FIFO Control Register — UARTn_FCR

Bit	15	14	13	12	11	10	9	8	7	6	5	4	3	2	1	0
Name									RFTL1	RFTL0	TFTL1	TFTL0	DMA1	CLRT	CLRR	FIFOE
Type									WO							

FCR FCR is used to control the trigger levels of the FIFOs, or flush the FIFOs.
FCR[7:6] is modified when LCR != BFh
FCR[5:4] is modified when LCR != BFh & EFR[4] = 1

© 2014 MediaTek Inc.

This document contains information that is proprietary to MediaTek Inc.
Unauthorized reproduction or disclosure of this information in whole or in part is strictly prohibited.
MEDIATEK CONFIDENTIAL FOR fanwang@ymnex.com.tw USE ONLY

FCR[4:0] is modified when LCR != BFh

FCR[7:6] RX FIFO trigger threshold

- **0** 1
- **1** 6
- **2** 12
- **3** **RXTRIG**

FCR[5:4] TX FIFO trigger threshold

- **0** 1
- **1** 4
- **2** 8
- **3** 14 (FIFOSIZE - 2)

DMA1 This bit determines the DMA mode, which the TXRDY and RXRDY pins support. TXRDY and RXRDY act to support single-byte transfers between the UART and memory (DMA mode 0) or multiple byte transfers (DMA mode1). Note that this bit has no effect unless the FIFOE bit is set as well

- **0** The device operates in DMA Mode 0.
- **1** The device operates in DMA Mode 1.

TXRDY – mode0: Goes active (low) when the TX FIFO or the TX Holding Register is empty. Becomes inactive when a byte is written to the Transmit channel.

TXRDY – mode1: Goes active (low) when there are no characters in the TX FIFO. Becomes inactive when the TX FIFO is full.

RXRDY – mode0: Becomes active (low) when at least one character is in the RX FIFO or the RX Buffer Register is full. Becomes inactive when there are no more characters in the RX FIFO or RX Buffer register.

RXRDY – mode1: Becomes active (low) when the RX FIFO Trigger Level is reached or an RX FIFO Character Timeout occurs. Goes inactive when the RX FIFO is empty.

CLRT Clear Transmit FIFO. This bit is self-clearing.

- **0** Leave TX FIFO intact.
- **1** Clear all the bytes in the TX FIFO.

CLRR Clear Receive FIFO. This bit is self-clearing.

- **0** Leave RX FIFO intact.
- **1** Clear all the bytes in the RX FIFO.

FIFOE FIFO Enabled. This bit must be set to 1 for any of the other bits in the registers to have any effect.

- **0** Disable both the RX and TX FIFOs.
- **1** Enable both the RX and TX FIFOs.

UARTn+000Ch Line Control Register — UARTn_LCR

Bit	15	14	13	12	11	10	9	8	7	6	5	4	3	2	1	0
Name									**DLAB**	**SB**	**SP**	**EPS**	**PEN**	**STB**	**WLS1**	**WLS0**
Type									R/W							
Reset									0	0	0	0	0	0	0	0

LCR Line Control Register. Determines characteristics of serial communication signals. Modified when LCR[7] = 0.

DLAB Divisor Latch Access Bit.

MEDIATEK CONFIDENTIAL
FOR tarrwang@synnex.com.tw USE ONLY

This document contains information that is proprietary to MediaTek Inc.
Unauthorized reproduction or disclosure of this information in whole or in part is strictly prohibited.

0 The RX and TX Registers are read/written at Address 0 and the IER register is read/written at Address 4.

1 The Divisor Latch LS is read/written at Address 0 and the Divisor Latch MS is read/written at Address 4.

SB Set Break

0 No effect

1 SOUT signal is forced into the "0" state.

SP Stick Parity

0 No effect.

1 The Parity bit is forced into a defined state, depending on the states of EPS and PEN:
If EPS=1 & PEN=1, the Parity bit is set and checked = 0.
If EPS=0 & PEN=1, the Parity bit is set and checked = 1.

EPS Even Parity Select

0 When EPS=0, an odd number of ones is sent and checked.

1 When EPS=1, an even number of ones is sent and checked.

PEN Parity Enable

0 The Parity is neither transmitted nor checked.

1 The Parity is transmitted and checked.

STB Number of STOP bits

0 One STOP bit is always added.

1 Two STOP bits are added after each character is sent; unless the character length is 5 when 1 STOP bit is added.

WLS1, 0 Word Length Select.

0 5 bits

1 6 bits

2 7 bits

3 8 bits

UARTn+0010h Modem Control Register UARTn_MCR

Bit	15	14	13	12	11	10	9	8	7	6	5	4	3	2	1	0
Name									XOFF STATUS		X	DCM_EN	OUT2	OUT1	RTS	DTR
Type									R/W							
Reset									0		0	0	0	0	0	0

MCR Modem Control Register. Control interface signals of the UART.
MCR[4:0] are modified when LCR[7] = 0,
MCR[7:6] are modified when LCR[7] = 0 & EFR[4] = 1.

XOFF Status This is a read-only bit.

0 When an XON character is received.

1 When an XOFF character is received.

DCM_EN UART DCM function enable bit

0 UART DCM is disabled.

1 UART DCM is enabled.

OUT2 Controls the state of the output NOUT2, even in loop mode.

0 NOUT2=1.

MEDIATEK CONFIDENTIAL
FOR fanwang@synnex.com.tw USE ONLY

This document contains information that is proprietary to MediaTek Inc.
Unauthorized reproduction or disclosure of this information in whole or in part is strictly prohibited.

1 NOUT2=0.

OUT1 Controls the state of the output NOUT1, even in loop mode.

0 NOUT1=1.

1 NOUT1=0.

RTS Controls the state of the output NRTS, even in loop mode.

0 NRTS=1.

1 NRTS=0.

DTR Control the state of the output NDTR, even in loop mode.

0 NDTR=1.

1 NDTR=0.

UARTn+0014h Line Status Register — UARTn_LSR

Bit	15	14	13	12	11	10	9	8	7	6	5	4	3	2	1	0
Name									FIFOERR	TEMT	THRE	BI	FE	PE	OE	DR
Type									R/W							
Reset									0	1	1	0	0	0	0	0

LSR Line Status Register.

Modified when LCR[7] = 0.

FIFOERR RX FIFO Error Indicator.

0 No PE, FE, BI set in the RX FIFO.

1 Set to 1 when there is at least one PE, FE or BI in the RX FIFO.

TEMT TX Holding Register (or TX FIFO) and the TX Shift Register are empty.

0 Empty conditions below are not met.

1 If FIFOs are enabled, the bit is set whenever the TX FIFO and the TX Shift Register are empty. If FIFOs are disabled, the bit is set whenever TX Holding Register and TX Shift Register are empty.

THRE Indicates if there is room for TX Holding Register or TX FIFO is reduced to its Trigger Level.

0 **Reset whenever the contents of the TX FIFO are more than its Trigger Level (FIFOs are enabled), or whenever TX Holding Register is not empty(FIFOs are disabled).**

1 Set whenever the contents of the TX FIFO are reduced to its Trigger Level (FIFOs are enabled), or whenever TX Holding Register is empty and ready to accept new data (FIFOs are disabled).

BI Break Interrupt.

0 Reset by the CPU reading this register

1 If the FIFOs are disabled, this bit is set whenever the SIN is held in the 0 state for more than one transmission time (START bit + DATA bits + PARITY + STOP bits).

If the FIFOs are enabled, this error is associated with a corresponding character in the FIFO and is flagged when this byte is at the top of the FIFO. When a break occurs, only one zero character is loaded into the FIFO: the next character transfer is enabled when SIN goes into the marking state and receives the next valid start bit.

FE Framing Error.

0 Reset by the CPU reading this register

1 If the FIFOs are disabled, this bit is set if the received data did not have a valid STOP bit. If the FIFOs are enabled, the state of this bit is revealed when the byte it refers to is the next to be read.

PE Parity Error

0 Reset by the CPU reading this register

MEDIATEK CONFIDENTIAL
FOR fartwang@symnex.com.tw USE ONLY

This document contains information that is proprietary to MediaTek Inc.
Unauthorized reproduction or disclosure of this information in whole or in part is strictly prohibited.

1 If the FIFOs are disabled, this bit is set if the received data did not have a valid parity bit. If the FIFOs are enabled, the state of this bit is revealed when the referred byte is the next to be read.

OE Overrun Error.

0 Reset by the CPU reading this register.

1 If the FIFOs are disabled, this bit is set if the RX Buffer was not read by the CPU before new data from the RX Shift Register overwrote the previous contents.
If the FIFOs are enabled, an overrun error occurs when the RX FIFO is full and the RX Shift Register becomes full. OE is set as soon as this happens. The character in the Shift Register is then overwritten, but not transferred to the FIFO.

DR Data Ready.

0 Cleared by the CPU reading the RX Buffer or by reading all the FIFO bytes.

1 Set by the RX Buffer becoming full or by a byte being transferred into the FIFO.

UARTn+0018h Modem Status Register — UARTn_MSR

Bit	15	14	13	12	11	10	9	8	7	6	5	4	3	2	1	0
Name									DCD	RI	DSR	CTS	DDCD	TERI	DDSR	DCTS
Type									R/W	R/W	R/W	R/W	R/W	R/W	R/W	R/W
Reset									Input	Input	Input	Input	0	0	0	0

Note: After a reset, D4-D7 are inputs. A modem status interrupt can be cleared by writing '0' or set by writing '1' to this register. D0-D3 can be written to.
Modified when LCR[7] = 0.

MSR Modem Status Register

DCD Data Carry Detect.

When Loop = "0", this value is the complement of the NDCD input signal.
When Loop = "1", this value is equal to the OUT2 bit in the Modem Control Register.

RI Ring Indicator.

When Loop = "0", this value is the complement of the NRI input signal.
When Loop = "1", this value is equal to the OUT1 bit in the Modem Control Register.

DSR Data Set Ready

When Loop = "0", this value is the complement of the NDSR input signal.
When Loop = "1", this value is equal to the DTR bit in the Modem Control Register.

CTS Clear To Send.

When Loop = "0", this value is the complement of the NCTS input signal.
When Loop = "1", this value is equal to the RTS bit in the Modem Control Register.

DDCD Delta Data Carry Detect.

0 The state of DCD has not changed since the Modem Status Register was last read

1 Set if the state of DCD has changed since the Modem Status Register was last read.

TERI Trailing Edge Ring Indicator

0 The NRI input does not change since this register was last read.

1 Set if the NRI input changes from "0" to "1" since this register was last read.

DDSR Delta Data Set Ready

0 Cleared if the state of DSR has not changed since this register was last read.

1 Set if the state of DSR has changed since this register was last read.

DCTS Delta Clear To Send

MEDIATEK CONFIDENTIAL
FOR fariwang@synnex.com.tw USE ONLY

This document contains information that is proprietary to MediaTek Inc.
Unauthorized reproduction or disclosure of this information in whole or in part is strictly prohibited.

0 Cleared if the state of CTS has not changed since this register was last read.

1 Set if the state of CTS has changed since this register was last read.

UARTn+001Ch Scratch Register — UARTn_SCR

Bit	15	14	13	12	11	10	9	8	7	6	5	4	3	2	1	0
Name									SCR[7:0]							
Type									R/W							

A general purpose read/write register. After reset, its value is un-defined.
Modified when LCR[7] = 0.

UARTn+0000h Divisor Latch (LS) — UARTn_DLL

Bit	15	14	13	12	11	10	9	8	7	6	5	4	3	2	1	0
Name									DLL[7:0]							
Type									R/W							
Reset									1							

UARTn+0004h Divisor Latch (MS) — UARTn_DLM

Bit	15	14	13	12	11	10	9	8	7	6	5	4	3	2	1	0
Name									DLL[7:0]							
Type									R/W							
Reset									0							

Note: DLL & DLM can only be updated if DLAB is set ("1").. Note too that division by 1 generates a BAUD signal that is constantly high.
Modified when LCR[7] = 1.
The table below shows the divisor needed to generate a given baud rate from CLK inputs of 13, 26 MHz and 52 MHz. The effective clock enable generated is 16 x the required baud rate.

BAUD	13MHz	26MHz	52MHz
110	7386	14773	29545
300	2708	5417	10833
1200	677	1354	2708
2400	338	677	1354
4800	169	339	677
9600	85	169	339
19200	42	85	169
38400	21	42	85
57600	14	28	56
115200	6	14	28

Table 2 Divisor needed to generate a given baud rate

UARTn+0008h Enhanced Feature Register — UARTn_EFR

Bit	15	14	13	12	11	10	9	8	7	6	5	4	3	2	1	0
Name									AUTO CTS	AUTO RTS	D5	ENABLE -E	SW FLOW CONT[3:0]			
Type									R/W	R/W	R/W	R/W	R/W			
Reset									0	0	0	0	0			

*NOTE: Only when LCR=BF'h

MEDIATEK CONFIDENTIAL
FOR fanwang@symtex.com.tw USE ONLY

This document contains information that is proprietary to MediaTek Inc.
Unauthorized reproduction or disclosure of this information in whole or in part is strictly prohibited.

Auto CTS Enables hardware transmission flow control
- **0** Disabled.
- **1** Enabled.

Auto RTS Enables hardware reception flow control
- **0** Disabled.
- **1** Enabled.

Enable-E Enable enhancement features.
- **0** Disabled.
- **1** Enabled.

CONT[3:0] Software flow control bits.
- **00xx** No TX Flow Control
- **10xx** Transmit XON1/XOFF1 as flow control bytes
- **01xx** Transmit XON2/XOFF2 as flow control bytes
- **11xx** Transmit XON1 & XON2 and XOFF1 & XOFF2 as flow control words
- **xx00** No RX Flow Control
- **xx10** Receive XON1/XOFF1 as flow control bytes
- **xx01** Receive XON2/XOFF2 as flow control bytes
- **xx11** Receive XON1 & XON2 and XOFF1 & XOFF2 as flow control words

UARTn+0010h XON1 — UARTn_XON1

Bit	15	14	13	12	11	10	9	8	7	6	5	4	3	2	1	0
Name									**XON1[7:0]**							
Type									R/W							
Reset									0							

UARTn+0014h XON2 — UARTn_XON2

Bit	15	14	13	12	11	10	9	8	7	6	5	4	3	2	1	0
Name									**XON2[7:0]**							
Type									R/W							
Reset									0							

UARTn+0018h XOFF1 — UARTn_XOFF1

Bit	15	14	13	12	11	10	9	8	7	6	5	4	3	2	1	0
Name									**XOFF1[7:0]**							
Type									R/W							
Reset									0							

UARTn+001Ch XOFF2 — UARTn_XOFF2

Bit	15	14	13	12	11	10	9	8	7	6	5	4	3	2	1	0
Name									**XOFF2[7:0]**							
Type									R/W							
Reset									0							

MEDIATEK CONFIDENTIAL
FOR farrwang@synnex.com.tw USE ONLY

This document contains information that is proprietary to MediaTek Inc.
Unauthorized reproduction or disclosure of this information in whole or in part is strictly prohibited.

UARTn+0024h HIGH SPEED UART — UARTn_HIGHSPEED

Bit	15	14	13	12	11	10	9	8	7	6	5	4	3	2	1	0
Name															SPEED [1:0]	
Type															R/W	
Reset															0	

SPEED UART sample counter base

- **0** based on 16*baud_pulse, baud_rate = system clock frequency/16/{DLH, DLL}
- **1** based on 8*baud_pulse, baud_rate = system clock frequency/8/{DLH, DLL}
- **2** based on 4*baud_pulse, baud_rate = system clock frequency/4/{DLH, DLL}
- **3** based on sampe_count * baud_pulse, baud_rate = system clock frequency / sampe_count

When HIGHSPEED=3, the value (A * B) means ({DLM, DLL} * SAMPLE_COUNT).
When the Baudrate is more than 115200, it will be more accurate if we set HIGHSPEED=3.
The table below shows the divisor needed to generate a given baud rate from CLK inputs of 13M Hz based on different HIGHSPEED value.

BAUD	HIGHSPEED = 0	HIGHSPEED = 1	HIGHSPEED = 2	HIGHSPEED = 3
110	7386	14773	29545	7386 * 16
300	2708	7386	14773	2708 * 16
1200	677	2708	7386	677 * 16
2400	338	677	2708	338 * 16
4800	169	338	677	169 * 16
9600	85	169	338	85 * 16
19200	42	85	169	9 * 75
38400	21	42	85	13 * 26
57600	14	21	42	8 * 28
115200	7	14	21	4 * 28
230400	*	7	14	2 * 28
460800	*	*	7	1 * 28
921600	*	*	*	1 * 14

Table 3 *Divisor needed to generate a given baud rate from 13MHz based on different HIGHSPEED value*

The table below shows the divisor needed to generate a given baud rate from CLK inputs of 26 MHz based on different HIGHSPEED value.

BAUD	HIGHSPEED = 0	HIGHSPEED = 1	HIGHSPEED = 2	HIGHSPEED = 3
110	14773	29545	59091	7386 * 32
300	5417	14773	29545	2708 * 32
1200	1354	5417	14773	677 * 32
2400	677	1354	5417	338 * 32
4800	339	677	1354	169 * 32
9600	169	339	667	85 * 32
19200	85	169	339	18 * 75
38400	42	85	169	26 * 26

MEDIATEK CONFIDENTIAL
FOR fanwang@symtex.com.tw USE ONLY

This document contains information that is proprietary to MediaTek Inc.
Unauthorized reproduction or disclosure of this information in whole or in part is strictly prohibited.

57600	28	42	85	16 * 28
115200	14	28	42	8 * 28
230400	7	14	28	4 * 28
460800	*	7	14	2 * 28
921600	*	*	7	1 * 28

Table 4 *Divisor needed to generate a given baud rate from 26 MHz based on different HIGHSPEED value*

The table below shows the divisor needed to generate a given baud rate from CLK inputs of 52MHz based on different HIGHSPEED value.

BAUD	HIGHSPEED = 0	HIGHSPEED = 1	HIGHSPEED = 2	HIGHSPEED = 3
110	29545	59091	118182	14773 * 32
300	10833	29545	59091	5417 * 32
1200	2708	10833	29545	1354 * 32
2400	1354	2708	10833	667 * 32
4800	677	1354	2708	339 * 32
9600	339	677	1354	169 * 32
19200	169	339	677	36 * 75
38400	85	169	339	52 * 26
57600	56	85	169	32 * 28
115200	28	56	85	16 * 28
230400	14	28	56	8 * 28
460800	7	14	28	4 * 28
921600	*	7	14	2 * 28

Table 5 Divisor needed to generate a given baud rate from 52 MHz based on different HIGHSPEED value

UARTn+0028h SAMPLE_COUNT UARTn_SAMPLE_COUNT

Bit	15	14	13	12	11	10	9	8	7	6	5	4	3	2	1	0
Name									SAMPLECOUNT [7:0]							
Type									R/W							
Reset									0							

When HIGHSPEED=3, the sample_count is the threshold value for UART sample counter (sample_num).

Count from 0 to sample_count.

UARTn+002Ch SAMPLE_POINT UARTn_SAMPLE_POINT

Bit	15	14	13	12	11	10	9	8	7	6	5	4	3	2	1	0
Name									SAMPLEPOINT [7:0]							
Type									R/W							
Reset									Ffh							

When HIGHSPEED=3, UART gets the input data when sample_count=sample_num.

MEDIATEK CONFIDENTIAL
FOR fair.wang@symnex.com.tw USE ONLY

This document contains information that is proprietary to MediaTek Inc.
Unauthorized reproduction or disclosure of this information in whole or in part is strictly prohibited.

e.g. system clock = 13MHz, 921600 = 13000000 / 14
sample_count = 14 and sample point = 7 (sample the central point to decrease the inaccuracy)
The SAMPLE_POINT is usually (SAMPLE_COUNT/2).

UARTn+0034h Rate Fix Address — UARTn_RATEFIX_AD

Bit	15	14	13	12	11	10	9	8	7	6	5	4	3	2	1	0
Name																RXTE_FIX
Type																R/W
Reset																0

rate_fix When you set "rate_fix"(34H[0]), you can transmit and receive data only if the input f16m_en is enable.

UARTn+003Ch Guard time added register — UARTn_GUARD

Bit	15	14	13	12	11	10	9	8	7	6	5	4	3	2	1	0
Name												GUARD_EN	GUARD_CNT[3:0]			
Type												R/W	R/W	R/W	R/W	R/W
Reset												0	0	0	0	0

GUARD_CNT Guard interval count value. Guard interval = (1/(system clock / div_step / div)) * GUARD_CNT.

GUARD_EN Guard interval add enable signal.

- **0** No guard interval added.
- **1** Add guard interval after stop bit.

UARTn+0040h Escape character register — UARTn_ESCAPE_DAT

Bit	15	14	13	12	11	10	9	8	7	6	5	4	3	2	1	0
Name									ESCAPE_DAT[7:0]							
Type									WO							
Reset									FFh							

ESCAPE_DAT Escape character added before software flow control data and escape character, i.e. if tx data is xon (31h), with esc_en =1, uart transmits data as esc + CEh (~xon).

UARTn+0044h Escape enable register — UARTn_ESCAPE_EN

Bit	15	14	13	12	11	10	9	8	7	6	5	4	3	2	1	0
Name																ESC_EN
Type																R/W
Reset																0

ESC_EN Add escape character in transmitter and remove escape character in receiver by UART.

- **0** Do not deal with the escape character.
- **1** Add escape character in transmitter and remove escape character in receiver.

UARTn+0048h Sleep enable register — UARTn_SLEEP_EN

Bit	15	14	13	12	11	10	9	8	7	6	5	4	3	2	1	0
Name																SELLP_EN

MEDIATEK CONFIDENTIAL
FOR fairwang@synnex.com.tw USE ONLY

This document contains information that is proprietary to MediaTek Inc.
Unauthorized reproduction or disclosure of this information in whole or in part is strictly prohibited.

Type																R/W
Reset																0

SLEEP_EN For sleep mode issue

- **0** Do not deal with sleep mode indicate signal
- **1** To activate hardware flow control or software control according to software initial setting when chip enters sleep mode. Releasing hardware flow when chip wakes up; but for software control, uart sends xon when awaken and when FIFO does not reach threshold level.

UARTn+004Ch Virtual FIFO enable register UARTn_VFIFO_EN

Bit	15	14	13	12	11	10	9	8	7	6	5	4	3	2	1	0
Name																**VFIFO_EN**
Type																R/W
Reset																0

VFIFO_EN Virtual FIFO mechanism enable signal.

- **0** Disable VFIFO mode.
- **1** Enable VFIFO mode. When virtual mode is enabled, the flow control is based on the DMA threshold, and generates a timeout interrupt for DMA.

UARTn+0050h Rx Trigger Address UARTn_RXTRI_AD

Bit	15	14	13	12	11	10	9	8	7	6	5	4	3	2	1	0
Name													**RXTRIG[3:0]**			
Type													R/W			
Reset													0			

RXTRIG **When {rtm,rtl}=2'b11, The Rx FIFO threshold will be Rxtrig.**

UARTn+0054h Fractional Divider LSB Address UARTn_FRACDIV_L

Bit	15	14	13	12	11	10	9	8	7	6	5	4	3	2	1	0
Name									**FRACDIV_L**							
Type									R/W							
Reset									0	0	0	0	0	0	0	0

FRACDIV_L Add sampling count (+1) from state data7 to state data0, in order to contribute fractional divisor.

UARTn+0058h Fractional Divider MSB Address UARTn_FRACDIV_M

Bit	15	14	13	12	11	10	9	8	7	6	5	4	3	2	1	0
Name															**FRACDIV_M**	
Type															R/W	
Reset															0	0

FRACDIV_M Add sampling count in state stop and state parity, in order to contribute fractional divisor.

FRACDIV_L / FRACDIV_L Add one sampling period to each symbol, in order to increase the baud rate accuracy.

bit_extend register = FRACDIV_L[7:0]
FRACDIV_M[1:0]

Start	d0	d1	d2	d3	d4	d5	d6	d7	Parity	Stop

MEDIATEK CONFIDENTIAL
FOR farwang@synnex.com.tw USE ONLY

UARTn+005Ch FIFO Control Register — UARTn_FCR_RD

Bit	15	14	13	12	11	10	9	8	7	6	5	4	3	2	1	0
Name									**RFTL1**	**RFTL0**	**TFTL1**	**TFTL0**	**DMA1**			**FIFOE**
Type									RO							RO

Read out UARTn_FCR register.

UARTn+0060h TX Active Enable Address — UARTn_TX_ACTIVE_EN

Bit	15	14	13	12	11	10	9	8	7	6	5	4	3	2	1	0
Name															**TX_PU_EN**	**TX_OE_EN**
Type															R/W	R/W
Reset															0	0

TX_OE_EN Enable UART_TX_OE switching function. TX_OE is to control UART_TX output enable.
TX_PU_EN Enable UART_TX_PU switching function. TX_PU is to control UART_TX pull up enable.

MEDIATEK CONFIDENTIAL
FOR farrwang@synnex.com.tw USE ONLY

This document contains information that is proprietary to MediaTek Inc.
Unauthorized reproduction or disclosure of this information in whole or in part is strictly prohibited.

2.14 PCM Controller

2.14.1 Features

- Two clock sources are reserved for PCM circuit. (From internal clock generator, INT_PCM_CLK and EXT_PCM_CLK)
- PCM module can drive a clock out (with fraction-N dividor) to an external codec.
- Up to 4 channels PCM are available. 4 to 128 slots are configurable.
- Each channel supports a-law (8-bit)/u-law (8-bit)/raw-PCM (8-bit and 16-bit) transfer.
- Hardware converter of a-law<->raw-16 and u-law <-> raw-16 are implemented in design.
- Support long (8 cycle)/short (1 cycle)/configurable (intervals are configurable, use to emulate I^2S interface) FSYNC.
- DATA & FSYNC can be driven and sampled by either rising/falling of clock.
- Last bit of DTX can be configured as tri-stated on falling edge.
- Beginning of each slot is configurable by 10-bit registers on each channel.
- 32-byte FIFO are available for each channel
- PCM interface can emulate I2S interface (only 16-bit data-width supported).
- MSB/LSB order is configurable.
- Supports both a-law/u-law (8-bits) →linear PCM(16-bit) and linear PCM(16-bit) → a-law/u-law (8-bit)

2.14.2 Block Diagram

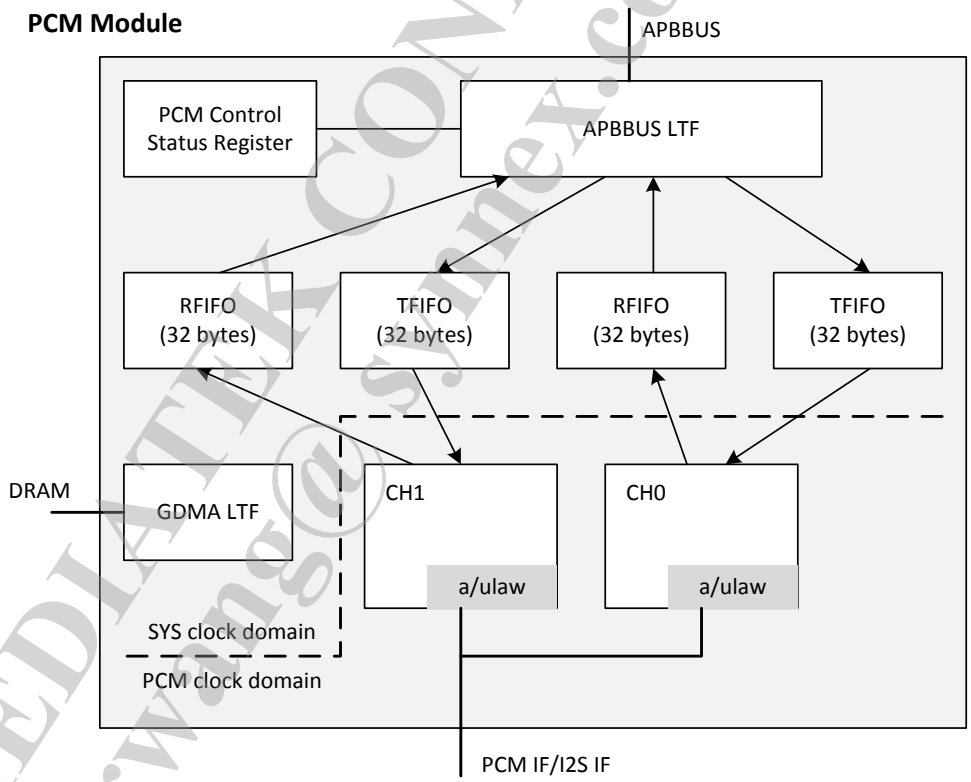

Figure 2-8 PCM Controller Block Diagram

Two clock domains are partitioned in this design. PCM converter (u-law < = > raw-16-bit and A-law < = > raw 16-bit) are implemented in PCM. The threshold of FIFO is configurable. When the threshold is reached, PCM (a) triggers the DMA interface to notify external DMA engine to transfer data, and (b) triggers an interrupt to the host.

© 2014 MediaTek Inc.

This document contains information that is proprietary to MediaTek Inc.
Unauthorized reproduction or disclosure of this information in whole or in part is strictly prohibited.
MEDIATEK CONFIDENTIAL
FOR farrwang@synnex.com.tw USE ONLY

The interrupt sources include:

- The threshold is reached.
- FIFO is under-run or over-run.
- A fault is detected at the DMA interface.

The A-law and u-law converter is implemented based on the ITU-G.711 A-law and u-law table. In this design, both A-law/u-law(8-bit) → linear PCM (16-bit) and linear PCM (16-bit) → A-law/u-law (8-bit) are supported.

The data-flow from codec to PCM-controller (Rx-flow) is shown as below:

- The PCM controller latches the data from DRX at the indicated time slot and then writes it to FIFO. If FIFO is full, the data is lost.
- When the Rx-FIFO reaches the threshold, two actions may be taken:
  - When DMA_ENA=1, DMA_REQ is asserted to request a burst transfer. It rechecks the FIFO threshold after DMA_END is asserted by GDMA. (GDMA should be configured before channel is enabled.)
  - Assert the interrupt source to notify the host. The host can check RFIFO_AVAIL information then get back the data from FIFO.

The data flow from the PCM controller to codec (Tx-flow) is shown below. After GDMA is configured, software should configure and enable the PCM channel. The empty FIFO should behave as follows.

- When DMA_ENA=1, DMA_REQ is triggered to request a burst transfer. It then re-checks the FIFO threshold after DMA_END is asserted by GDMA (a burst is completed).
- The Interrupt source is asserted to notify HOST. HOST writes the data to Tx-FIFO. After that, HOST rechecks TFIFO_EMPTY information, and then writes more data if available.

NOTE: When DMA_ENA=1, the burst size of GDMA should be less than the threshold value.

2.14.3 List of Registers

2.14.4 PCM Configuration

PCM Initialization Flow

1. Set PCM_CFG
2. Set CH0/1_CFG
3. Write PCM data to FIFO CH0/1_FIFO
4. Set GLB_CFG to enable the PCM and channel.
5. Set dividor clock
6. Enable clock
7. Monitor FF_STATUS to receive/transmit the other PCM data.

PCM Configuration Examples

Below are some examples of PCM configuration.

Case 1:

CFG_FSYNC Register: CFG_FSYNC_EN = 0 (PS: fsync is always driven at SLOT_CNT=1)

CH0_CFG Register: TS_START=1

CH1_CFG Register: TS_START=9

PCM_CFG Register: LONG_FSYNC=1’b0, FSYNC_POL=1’b1, DRX_TRI=1’b0, SLOT_MODE=3’b0

MEDIATEK CONFIDENTIAL
FOR fanwang@synnex.com.tw USE ONLY

This document contains information that is proprietary to MediaTek Inc.
Unauthorized reproduction or disclosure of this information in whole or in part is strictly prohibited.

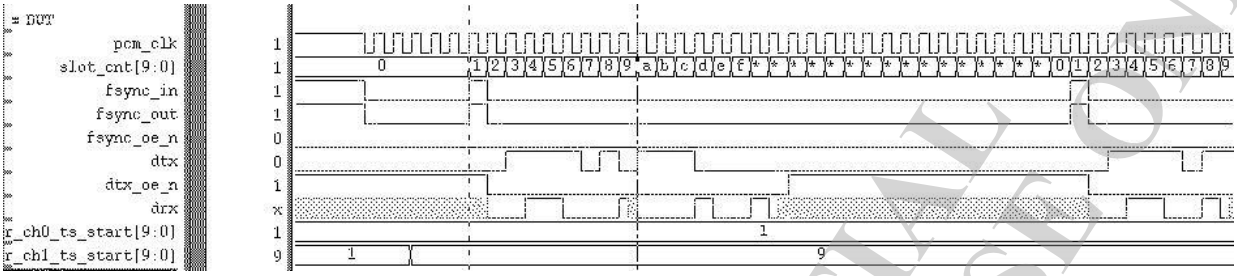

Case 2:

CFG_FSYNC Register: CFG_FSYNC_EN = 1, START_LOC=0, interval=16

CH0_CFG Register: TS_START=1

CH1_CFG Register: TS_START=17

PCM_CFG Register: LONG_FSYNC=1'b0, FSYNC_POL=1'b1, DRX_TRI=1'b0, SLOT_MODE=3'b0, RAW16-bits

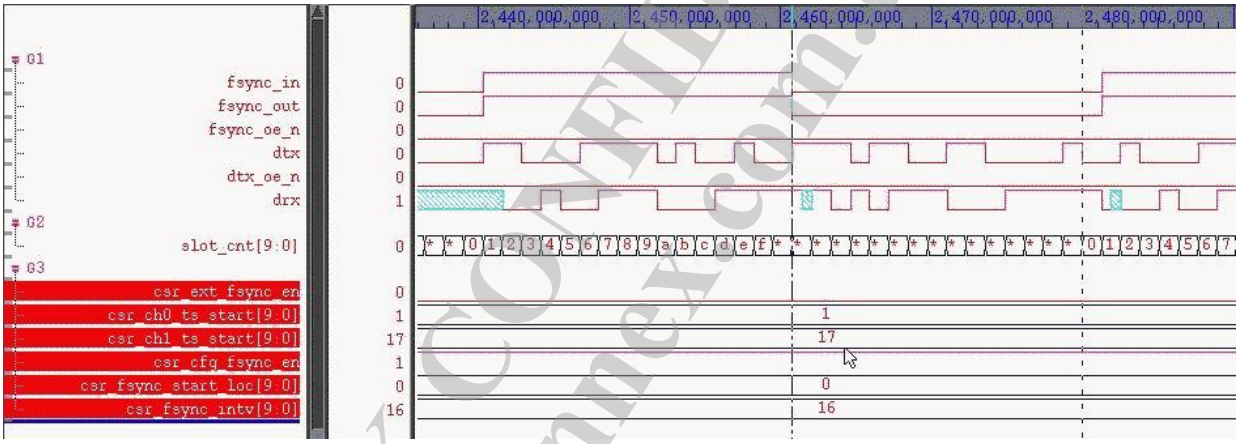

Case 3:

CFG_FSYNC Register: CFG_FSYNC_EN = 1, START_LOC=0x1A, interval=2

CH0_CFG Register: TS_START=1 (disable)

CH1_CFG Register: TS_START=0x1A

PCM_CFG Register: LONG_FSYNC=1'b0, FSYNC_POL=1'b0 (LOW active), DRX_TRI=1'b0, SLOT_MODE=3'b0, RAW16-bits

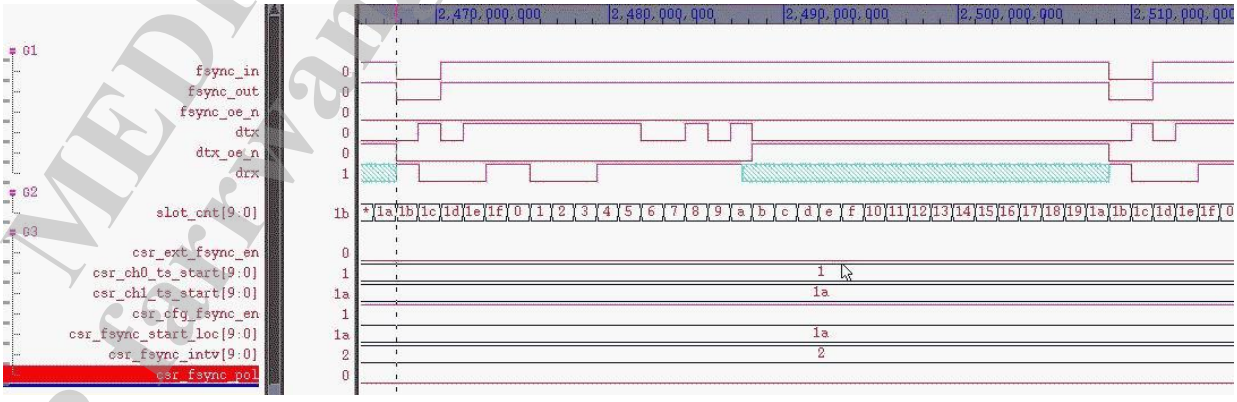

MEDIATEK CONFIDENTIAL
FOR ccrwang@symnex.com.tw USE ONLY

This document contains information that is proprietary to MediaTek Inc.
Unauthorized reproduction or disclosure of this information in whole or in part is strictly prohibited.

2.14.5 Register

PCM Changes LOG

Revision	Date	Author	Change Log
0.1	2012/10/8	Paddy Wu	Initialization

Module name: PCM Base address: (+10002000h)

Address	Name	Width	Register Function
10002000	GLB_CFG	32	Global Config
10002004	PCM_CFG	32	PCM configuration
10002008	INT_STATUS	32	Interrupt status
1000200C	INT_EN	32	Interrupt enable
10002010	CHA0_FF_STATUS	32	Channel A0(represents channel 0) FIFO status
10002014	CHB0_FF_STATUS	32	Channel B0(represents channel 1) FIFO status
10002020	CHA0_CFG	32	Channel A0(represents channel 0) Config
10002024	CHB0_CFG	32	Channel B0(represents channel 1) Config
10002030	FSYNC_CFG	32	FSYNC config
10002034	CHA0_CFG2	32	Channel A0(represents channel 0) Config
10002038	CHB0_CFG2	32	Channel B0(represents channel 1) Config
10002040	IP_INFO	32	IP version info
10002044	RSV_REG16	32	SPARE REG 16 bits
10002050	DIVCOMP_CFG	32	Dividor Compensation part config
10002054	DIVINT_CFG	32	Dividor Integer part config
10002060	DIGDELAY_CFG	32	Digital delay config
10002080	CH0_FIFO	32	Channel 0 FIFO access point
10002084	CH1_FIFO	32	Channel 1 FIFO access point
10002088	CH2_FIFO	32	Channel 2 FIFO access point
1000208C	CH3_FIFO	32	Channel 3 FIFO access point
10002110	CHA1_FF_STATUS	32	Channel A1(represents channel 3) FIFO status
10002114	CHB1_FF_STATUS	32	Channel B1(represents channel 4) FIFO status
10002120	CHA1_CFG	32	Channel A1(represents channel 3) Config
10002124	CHB1_CFG	32	Channel B1(represents channel 1) Config
10002134	CHA1_CFG2	32	Channel A1(represents channel 3) Config
10002138	CHB1_CFG2	32	Channel B1(represents channel 4) Config

10002000 GLB_CFG Global Config **00440000**

Bit	31	30	29	28	27	26	25	24	23	22	21	20	19	18	17	16
Name	PCM_EN	DMA_EN	LBK_EN	EXT_LBK_EN	RSV0					RFF_THRES			RSV1	TFF_THRES		

MEDIATEK CONFIDENTIAL
FOR farrwang@sunnyscom.tw USE ONLY

This document contains information that is proprietary to MediaTek Inc.
Unauthorized reproduction or disclosure of this information in whole or in part is strictly prohibited.

Type	RW	RW	RW	RW	RO					RW			RO	RW		
Reset	0	0	0	0	0	0	0	0	0	1	0	0	0	1	0	0
Bit	15	14	13	12	11	10	9	8	7	6	5	4	3	2	1	0
Name	RSV2												CH_EN			
Type	RO												RW			
Reset	0	0	0	0	0	0	0	0	0	0	0	0	0	0	0	0

Bit(s)	Name	Description
31	PCM_EN	**PCM Enable** When disabled, all FSM of PCM are cleared to their default value. 0: disable 1: enable
30	DMA_EN	**DMA Enable** 0: Disable the DMA interface, transfer data using software. 1: Enable the DMA interface, transfer data using DMA. 0: disable 1: enable
29	LBK_EN	**loopback enable, loopback path is shown as (Asyn-TXFIFO ->DTX -> DRX->Asyn-RXFIFO)** 0: disable 1: enable
28	EXT_LBK_EN	**loopback enable, loopback path is shown as (Ext-Codec->DRX->DTX->Ext-Codec)** 0: disable 1: enable
27:23	RSV0	**Reserved**
22:20	RFF_THRES	**RXFIFO Threshold** When the threshold is reached, the host/DMA is notified to fill FIFO. The threshold should be >2 and <6. When data in FIFO is under the threshold, the following interrupts and GDMA are triggered. CH0T_THRES, CH0R_THRES, CH1T_THRES, CH1R_THRES (unit: word)
19	RSV1	**Reserved**
18:16	TFF_THRES	**TXFIFO Threshold** When the threshold is reached, the host/DMA is notified to fill FIFO. It should be >2 and <6. When data in FIFO is over the threshold, an interrupt and DMA are triggered. (unit: word)
15:4	RSV2	**Reserved**
3:0	CH_EN	**Channels 3 to 0 Tx and Rx Enable** 0: disable 1: enable

10002004 **PCM_CFG** **PCM configuration** **03000000**

Bit	31	30	29	28	27	26	25	24	23	22	21	20	19	18	17	16
Name	RSV0	CLKOUT_EN	RSV1		EXT_FSYNC	LONG_SYNC	FSYNC_POL	DTX_TRI	RSV2[20:13]							
Type	RO	RW	RO		RW	RW	RW	RW	RO							
Reset	0	0	0	0	0	0	1	1	0	0	0	0	0	0	0	0
Bit	15	14	13	12	11	10	9	8	7	6	5	4	3	2	1	0
Name	RSV2[12:0]													SLOT_MODE		
Type	RO													RW		

MEDIATEK CONFIDENTIAL
FOR TAIWANSEMI USE ONLY
ans@synnex.com.tw

This document contains information that is proprietary to MediaTek Inc.
Unauthorized reproduction or disclosure of this information in whole or in part is strictly prohibited.

Reset	0	0	0	0	0	0	0	0	0	0	0	0	0	0	0	0

Bit(s)	Name	Description
31	RSV0	**Reserved**
30	CLKOUT_EN	**PCM Clock Out Enable** 0: A PCM clock is provided from the external Codec/OSC. 1: A PCM clock is provided from the internal dividor. NOTE: Normally, the register should be asserted to 1. Also, it should be asserted after configuring the divider and enabling the divider clock. 0: EXT_CLK 1: INT_DIV
29:28	RSV1	**Reserved**
27	EXT_FSYNC	**FSYNC is provided externally** 0: FSYNC is generated by internal circuit. 1: FSYNC is provided externally
26	LONG_SYNC	**FSYNC Mode** 0: Short FSYNC 1: Long FSYNC
25	FSYNC_POL	**FSYNC Polarity** 0: FSYNC is low active 1: FSYNC is high active
24	DTX_TRI	**DTX Tri-State** Tristates DTX when the clock signal on the last bit is has a falling edge. 0: Non- tristate DTX 1: Tristate DTX
23:3	RSV2	**Reserved**
2:0	SLOT_MODE	**Sets the number of slots in each PCM frame.** 0: 4 slots, PCM clock out/in should be 256 KHz. 1: 8 slots, PCM clock out/in should be 512 KHz. 2: 16 slots, PCM clock out/in should be 1.024 MHz. 3: 32 slots, PCM clock out/in should be 2.048 MHz. 4: 64 slots, PCM clock out/in should be 4.096 MHz. 5:128 slots, PCM clock out/in should be 8.192 MHz. Other: Reserved. NOTE: When using the external clock, the frequency clock should be equal to PCM_clock out. Otherwise, the PCM_CLKin should be 8.192 MHz. 0: _4_SLOT 1: _8_SLOT 2: _16_SLOT 3: _32_SLOT 4: _64_SLOT 5: _128_SLOT

10002008 INT_STATUS Interrupt status **00000000**

Bit	31	30	29	28	27	26	25	24	23	22	21	20	19	18	17	16
Name	RSV0[23:8]															
Type	RO															
Reset	0	0	0	0	0	0	0	0	0	0	0	0	0	0	0	0
Bit	15	14	13	12	11	10	9	8	7	6	5	4	3	2	1	0
Name	RSV0[7:0]								CHT_DMA_FAULT	CHT_OVRUN	CHT_UNRUN	CHT_THRES	CHR_DMA_FAULT	CHR_OVRUN	CHR_UNRUN	CHR_THRES

FOR MEDIATEK CONFIDENTIAL
fanyang@fox.com.tw USE ONLY

This document contains information that is proprietary to MediaTek Inc.
Unauthorized reproduction or disclosure of this information in whole or in part is strictly prohibited.

Type	RO								W1C	W1C	W1C	W1C	W1C	W1C	W1C	W1C
Reset	0	0	0	0	0	0	0	0	0	0	0	0	0	0	0	0

Bit(s)	Name	Description
31:8	RSV0	**Reserved**
7	CHT_DMA_FAULT	**Channel Tx DMA Fault Interrupt, Asserts when a fault has been detected in a CH-Tx DMA signal.**
6	CHT_OVRUN	**Channel Tx FIFO Overrun Interrupt, Asserts when the CH-Tx FIFO is overrun.**
5	CHT_UNRUN	**Channel Tx FIFO Underrun Interrupt, Asserts when the CH-Tx FIFO is underrun.**
4	CHT_THRES	**Channel Tx Threshold Interrupt, Asserts when the CH-Tx FIFO is lower than the defined threshold.**
3	CHR_DMA_FAULT	**Channel Rx DMA Fault Interrupt, Asserts when a fault is detected in a CH-Rx DMA signal.**
2	CHR_OVRUN	**Channel Rx Overrun Interrupt, Asserts when the CH-Rx FIFO is overrun.**
1	CHR_UNRUN	**Channel Rx Underrun Interrupt, Asserts when the CH-Rx FIFO is underrun.**
0	CHR_THRES	**Channel Rx Threshold Interrupt, Asserts when the CH-Rx FIFO is lower than the defined threshold.**

1000200C **INT_EN** **Interrupt enable** **00000000**

Bit	31	30	29	28	27	26	25	24	23	22	21	20	19	18	17	16
Name	RSV0[23:8]															
Type	RO															
Reset	0	0	0	0	0	0	0	0	0	0	0	0	0	0	0	0
Bit	15	14	13	12	11	10	9	8	7	6	5	4	3	2	1	0
Name	RSV0[7:0]								INT7_EN	INT6_EN	INT5_EN	INT4_EN	INT3_EN	INT2_EN	INT1_EN	INT0_EN
Type	RO								RW	RW	RW	RW	RW	RW	RW	RW
Reset	0	0	0	0	0	0	0	0	0	0	0	0	0	0	0	0

Bit(s)	Name	Description
31:8	RSV0	**Reserved**
7	INT7_EN	**INT_STATUS[7] Enable,Enables the Channel Tx DMA Fault Interrupt. This interrupt asserts when a fault has been detected in a CH-Tx DMA signal.**
6	INT6_EN	**INT_STATUS[6] Enable,Enables the Channel Tx FIFO Overrun Interrupt. This interrupt asserts when the CH-Tx FIFO is overrun.**
5	INT5_EN	**INT_STATUS[5] Enable,Enables the Channel Tx FIFO Underrun Interrupt. This interrupt asserts when the CH-Tx FIFO is underrun.**
4	INT4_EN	**INT_STATUS[4] Enable,Enables the Channel Tx Threshold Interrupt. This interrupt when the CH-Tx FIFO is lower than the defined threshold.**
3	INT3_EN	**INT_STATUS[3] Enable,Enables the Channel Rx DMA Fault Interrupt. This interrupt when a fault is detected in a CH-Rx DMA signal.**
2	INT2_EN	**INT_STATUS[2] Enable,Enables the Channel Rx Overrun Interrupt. This interrupt when the CH-Rx FIFO is overrun.**
1	INT1_EN	**INT_STATUS[1] Enable,Enables the Channel Rx Underrun Interrupt. This interrupt when the CH-Rx FIFO is under-run.**
0	INT0_EN	**INT_STATUS[0] Enable,Enables the Channel Rx Threshold Interrupt.**

MEDIATEK CONFIDENTIAL
FOR farrwane@symtex.com.tw USE ONLY

This document contains information that is proprietary to MediaTek Inc.
Unauthorized reproduction or disclosure of this information in whole or in part is strictly prohibited.

Bit(s)	Name	Description
		This interrupt asserts when the CH-Rx FIFO is lower than the defined threshold.

10002010 **CHA0_FF_STATUS** **Channel A0(represents channel 0) FIFO status** **00100008**

Bit	31	30	29	28	27	26	25	24	23	22	21	20	19	18	17	16
Name	RSV0								CHTX_DMA_FAULT	CHTX_OVRUN	CHTX_UNRUN	CHTX_THRES	CHRX_DMA_FAULT	CHRX_OVRUN	CHRX_UNRUN	CHRX_THRES
Type	RO								W1C	W1C	W1C	W1C	W1C	W1C	W1C	W1C
Reset	0	0	0	0	0	0	0	0	0	0	0	1	0	0	0	0
Bit	15	14	13	12	11	10	9	8	7	6	5	4	3	2	1	0
Name	RSV1								CHRFF_AVCNT				CHTFF_EPCNT			
Type	RO								RO				RO			
Reset	0	0	0	0	0	0	0	0	0	0	0	0	1	0	0	0

Bit(s)	Name	Description
31:24	RSV0	Reserved
23	CHTX_DMA_FAULT	Tx DMA Fault Detected Interrupt,Asserts when a fault is detected in a Channel A0 Tx DMA signal.
22	CHTX_OVRUN	Tx Overrun Interrupt,Asserts when the Channel A0 Tx FIFO is overrun.
21	CHTX_UNRUN	Tx FIFO Underrun Interrupt,Asserts when the Channel A0 Tx FIFO is underrun.
20	CHTX_THRES	Tx FIFO Below Threshold Interrupt,Asserts when the Channel A0 FIFO is lower than the defined threshold.
19	CHRX_DMA_FAULT	Rx DMA Fault Detected Interrupt,Asserts when a fault is detected in a Channel A0 Rx DMA signal.
18	CHRX_OVRUN	Rx FIFO Overrun Interrupt,Asserts when the Channel A0 Rx FIFO is overrun.
17	CHRX_UNRUN	Rx FIFO Underrun Interrupt,Asserts when the Channel A0 Rx FIFO is underrun.
16	CHRX_THRES	Rx FIFO Below Threshold Interrupt,Asserts when the Channel A0 FIFO is lower than the defined threshold.
15:8	RSV1	Reserved
7:4	CHRFF_AVCNT	Channel A0 RXFIFO Available Space Count,Counts the available space for reads in channel A0 RXFIFO.(unit: word)
3:0	CHTFF_EPCNT	Channel A0 TXFIFO Available Space Count,Counts the available space for writes in channel A0 TXFIFO.(unit: word)

10002014 **CHB0_FF_STATUS** **Channel B0(represents channel 1) FIFO status** **00100008**

Bit	31	30	29	28	27	26	25	24	23	22	21	20	19	18	17	16
Name	RSV0								CHTX_DMA_FAULT	CHTX_OVRUN	CHTX_UNRUN	CHTX_THRES	CHRX_DMA_FAULT	CHRX_OVRUN	CHRX_UNRUN	CHRX_THRES

MEDIATEK CONFIDENTIAL
FOR fan.wang@symtex.com.tw USE ONLY

This document contains information that is proprietary to MediaTek Inc.
Unauthorized reproduction or disclosure of this information in whole or in part is strictly prohibited.

Type	RO								W1C	W1C	W1C	W1C	W1C	W1C	W1C	W1C
Reset	0	0	0	0	0	0	0	0	0	0	0	1	0	0	0	0
Bit	15	14	13	12	11	10	9	8	7	6	5	4	3	2	1	0
Name	RSV1								CHRFF_AVCNT				CHTFF_EPCNT			
Type	RO								RO				RO			
Reset	0	0	0	0	0	0	0	0	0	0	0	0	1	0	0	0

Bit(s)	Name	Description
31:24	RSV0	**Reserved**
23	CHTX_DMA_FAULT	**Tx DMA Fault Detected Interrupt,Asserts when a fault is detected in a Channel B0 Tx DMA signal.**
22	CHTX_OVRUN	**Tx Overrun Interrupt,Asserts when the Channel B0 Tx FIFO is overrun.**
21	CHTX_UNRUN	**Tx FIFO Underrun Interrupt,Asserts when the Channel B0 Tx FIFO is underrun.**
20	CHTX_THRES	**Tx FIFO Below Threshold Interrupt,Asserts when the Channel B0 FIFO is lower than the defined threshold.**
19	CHRX_DMA_FAULT	**Rx DMA Fault Detected Interrupt,Asserts when a fault is detected in a Channel B0 Rx DMA signal.**
18	CHRX_OVRUN	**Rx FIFO Overrun Interrupt,Asserts when the Channel B0 Rx FIFO is overrun.**
17	CHRX_UNRUN	**Rx FIFO Underrun Interrupt,Asserts when the Channel B0 Rx FIFO is underrun.**
16	CHRX_THRES	**Rx FIFO Below Threshold Interrupt,Asserts when the Channel B0 FIFO is lower than the defined threshold.**
15:8	RSV1	**Reserved**
7:4	CHRFF_AVCNT	**Channel B0 RXFIFO Available Space Count,Counts the available space for reads in channel B0 RXFIFO.(unit: word)**
3:0	CHTFF_EPCNT	**Channel B0 TXFIFO Available Space Count,Counts the available space for writes in channel B0 TXFIFO.(unit: word)**

10002020 CHA0_CFG Channel A0(represents channel 0) Config 00000001

Bit	31	30	29	28	27	26	25	24	23	22	21	20	19	18	17	16
Name	RSV0		CMP_MODE			RSV1[16:6]										
Type	RO		RW			RO										
Reset	0	0	0	0	0	0	0	0	0	0	0	0	0	0	0	0
Bit	15	14	13	12	11	10	9	8	7	6	5	4	3	2	1	0
Name	RSV1[5:0]						TS_START									
Type	RO						RW									
Reset	0	0	0	0	0	0	0	0	0	0	0	0	0	0	0	1

Bit(s)	Name	Description
31:30	RSV0	**Reserved**
29:27	CMP_MODE	**Compression Mode** Sets the conversion method for the hardware converter to compress raw data. 000: Disable HW converter, linear raw data (16-bit) 010: Disable HW converter, linear raw data (8-bit), A-law or u-law (8-bit) 011: Reserved 100: Enable HW converter, raw data(16-bit) U-law mode (8-bit) (PCM bus in compressed format) 101: Enable HW converter, u-law mode (8-bit) raw data (16-bit) (PCM bus in raw, 16-bit format) 110: Enable HW converter, raw data (16-bit) A-law mode (8-bit) (PCM bus in

MEDIATEK CONFIDENTIAL
FOR farrwang@synnex.com.tw USE ONLY

This document contains information that is proprietary to MediaTek Inc.
Unauthorized reproduction or disclosure of this information in whole or in part is strictly prohibited.

Bit(s)	Name	Description
		compressed format) 111: Enable HW converter, A-law mode (8-bit) raw data (16-bit) (PCM bus in raw, 16-bit format) 0: DIS_CONV16 2: DIS_CONV8 4: EN_ULW2R 5: EN_R2ULW 6: EN_ALW2R 7: EN_R2ALW
26:10	RSV1	**Reserved**
9:0	TS_START	**Timeslot starting location** (unit: clock cycles)

10002024 **CHB0_CFG** **Channel B0(represents channel 1) Config** **00000001**

Bit	31	30	29	28	27	26	25	24	23	22	21	20	19	18	17	16
Name	RSV0		CMP_MODE			RSV1[16:6]										
Type	RO		RW			RO										
Reset	0	0	0	0	0	0	0	0	0	0	0	0	0	0	0	0
Bit	15	14	13	12	11	10	9	8	7	6	5	4	3	2	1	0
Name	RSV1[5:0]						TS_START									
Type	RO						RW									
Reset	0	0	0	0	0	0	0	0	0	0	0	0	0	0	0	1

Bit(s)	Name	Description
31:30	RSV0	**Reserved**
29:27	CMP_MODE	**Compression Mode** Sets the conversion method for the hardware converter to compress raw data. 000: Disable HW converter, linear raw data (16-bit) 010: Disable HW converter, linear raw data (8-bit), A-law or u-law (8-bit) 011: Reserved 100: Enable HW converter, raw data(16-bit) U-law mode (8-bit) (PCM bus in compressed format) 101: Enable HW converter, u-law mode (8-bit) raw data (16-bit) (PCM bus in raw, 16-bit format) 110: Enable HW converter, raw data (16-bit) A-law mode (8-bit) (PCM bus in compressed format) 111: Enable HW converter, A-law mode (8-bit) raw data (16-bit) (PCM bus in raw, 16-bit format) 0: DIS_CONV16 2: DIS_CONV8 4: EN_ULW2R 5: EN_R2ULW 6: EN_ALW2R 7: EN_R2ALW
26:10	RSV1	**Reserved**
9:0	TS_START	**Timeslot starting location** (unit: clock cycles)

10002030 **FSYNC_CFG** **FSYNC config** **28000000**

Bit	31	30	29	28	27	26	25	24	23	22	21	20	19	18	17	16

MEDIATEK CONFIDENTIAL
FOR fariwang@mnex.com.tw USE ONLY

This document contains information that is proprietary to MediaTek Inc.
Unauthorized reproduction or disclosure of this information in whole or in part is strictly prohibited.

Name	CFG_FSYNC_EN	POS_CAP_DT	POS_DRV_DT	POS_CAP_FSYNC	POS_DRV_FSYNC	RSV0					RSV1[11:6]					
Type	RW	RW	RW	RW	RW	RO					RO					
Reset	0	0	1	0	1	0	0	0	0	0	0	0	0	0	0	0
Bit	15	14	13	12	11	10	9	8	7	6	5	4	3	2	1	0
Name	RSV1[5:0]						FSYNC_INTV									
Type	RO						RW									
Reset	0	0	0	0	0	0	0	0	0	0	0	0	0	0	0	0

Bit(s)	Name	Description
31	CFG_FSYNC_EN	**Enables configurable FSYNC.**
30	POS_CAP_DT	**Positive Edge Capture Data, Sets the PCM controller to capture data on the negative or positive edge of the PCM clock. NOTE: This configuration should be 0 if DTX_TRI=1.**
29	POS_DRV_DT	**Positive Edge Drive Data, Sets the PCM controller to drive data on the negative or positive edge of the PCM clock.**
28	POS_CAP_FSYNC	**Positive Edge Capture FSYNC, Sets the PCM controller to capture FSYNC on the positive or negative edge of the PCM clock.**
27	POS_DRV_FSYNC	**Positive Edge Driver FSYNC, Sets the PCM controller to drive FSYNC on the negative or positive edge of the PCM clock.**
26:22	RSV0	**Reserved**
21:10	RSV1	**Reserved**
9:0	FSYNC_INTV	**Interval when FSYNC may be configured.** (unit: clock cycles)

10002034 **CHA0_CFG2** **Channel A0(represents channel 0) Config** **00000000**

Bit	31	30	29	28	27	26	25	24	23	22	21	20	19	18	17	16
Name	RSV0[27:12]															
Type	RO															
Reset	0	0	0	0	0	0	0	0	0	0	0	0	0	0	0	0
Bit	15	14	13	12	11	10	9	8	7	6	5	4	3	2	1	0
Name	RSV0[11:0]												CH_RXFF_CLR	CH_TXFF_CLR	RSV1	CH_LSB
Type	RO												RW	RW	RO	RW
Reset	0	0	0	0	0	0	0	0	0	0	0	0	0	0	0	0

Bit(s)	Name	Description
31:4	RSV0	**Reserved**
3	CH_RXFF_CLR	**Channel A0 Rx FIFO Clear** 0: Normal operation 1: Clear this bit
2	CH_TXFF_CLR	**Channel A0 Tx FIFO Clear** 0: Normal operation 1: Clear this bit
1	RSV1	**Reserved**
0	CH_LSB	**Enable CH A0 Tx in LSB order.**

MEDIATEK CONFIDENTIAL
FOR fairwang@symnex.com.tw USE ONLY

This document contains information that is proprietary to MediaTek Inc.
Unauthorized reproduction or disclosure of this information in whole or in part is strictly prohibited.

10002038 CHB0_CFG2 Channel B0(represents channel 1) Config 00000000

Bit	31	30	29	28	27	26	25	24	23	22	21	20	19	18	17	16
Name	RSV0[27:12]															
Type	RO															
Reset	0	0	0	0	0	0	0	0	0	0	0	0	0	0	0	0
Bit	15	14	13	12	11	10	9	8	7	6	5	4	3	2	1	0
Name	RSV0[11:0]												CH_RXFF_CLR	CH_TXFF_CLR	RSV1	CH_LSB
Type	RO												RW	RW	RO	RW
Reset	0	0	0	0	0	0	0	0	0	0	0	0	0	0	0	0

Bit(s)	Name	Description
31:4	RSV0	**Reserved**
3	CH_RXFF_CLR	**Channel B0 Rx FIFO Clear** 0: Normal operation 1: Clear this bit
2	CH_TXFF_CLR	**Channel B0 Tx FIFO Clear** 0: Normal operation 1: Clear this bit
1	RSV1	**Reserved**
0	CH_LSB	**Enable CH B0 Tx in LSB order.**

10002040 IP_INFO IP version info 00000401

Bit	31	30	29	28	27	26	25	24	23	22	21	20	19	18	17	16
Name	RSV0															
Type	RO															
Reset	0	0	0	0	0	0	0	0	0	0	0	0	0	0	0	0
Bit	15	14	13	12	11	10	9	8	7	6	5	4	3	2	1	0
Name	MAX_CH								VER							
Type	RO								RO							
Reset	0	0	0	0	0	1	0	0	0	0	0	0	0	0	0	1

Bit(s)	Name	Description
31:16	RSV0	**Reserved**
15:8	MAX_CH	**Maximum channel number.**
7:0	VER	**Version of this PCM Controller**

10002044 RSV_REG16 SPARE REG 16 bits 00000000

Bit	31	30	29	28	27	26	25	24	23	22	21	20	19	18	17	16
Name	RSV0															
Type	RO															
Reset	0	0	0	0	0	0	0	0	0	0	0	0	0	0	0	0
Bit	15	14	13	12	11	10	9	8	7	6	5	4	3	2	1	0
Name	SPARE_REG															
Type	RW															
Reset	0	0	0	0	0	0	0	0	0	0	0	0	0	0	0	0

FOR MEDIATEK CONFIDENTIAL ONLY
fanyang@symnex.com.tw USE

This document contains information that is proprietary to MediaTek Inc.
Unauthorized reproduction or disclosure of this information in whole or in part is strictly prohibited.

Bit(s)	Name	Description
31:16	RSV0	**Reserved**
15:0	SPARE_REG	**Spare register for future use**

10002050 **DIVCOMP_CFG** **Dividor Compensation part config** **00000000**

Bit	31	30	29	28	27	26	25	24	23	22	21	20	19	18	17	16
Name	CLK_EN	RSV0[22:8]														
Type	RW	RO														
Reset	0	0	0	0	0	0	0	0	0	0	0	0	0	0	0	0
Bit	15	14	13	12	11	10	9	8	7	6	5	4	3	2	1	0
Name	RSV0[7:0]								DIVCOMP							
Type	RO								RW							
Reset	0	0	0	0	0	0	0	0	0	0	0	0	0	0	0	0

Bit(s)	Name	Description
31	CLK_EN	**Clock Enable** Enables setting of the PCM interface clock based on DIVCOMP and DIVINT parameters.
30:8	RSV0	**Reserved**
7:0	DIVCOMP	**A parameter in an equation which determines FREQOUT. See DIVINT.**

10002054 **DIVINT_CFG** **Dividor Integer part config** **00000000**

Bit	31	30	29	28	27	26	25	24	23	22	21	20	19	18	17	16
Name	RSV0[21:6]															
Type	RO															
Reset	0	0	0	0	0	0	0	0	0	0	0	0	0	0	0	0
Bit	15	14	13	12	11	10	9	8	7	6	5	4	3	2	1	0
Name	RSV0[5:0]						DIVINT									
Type	RO						RW									
Reset	0	0	0	0	0	0	0	0	0	0	0	0	0	0	0	0

Bit(s)	Name	Description
31:10	RSV0	**Reserved**
9:0	DIVINT	**A parameter in an equation which determines FREQOUT.** Formula: FREQOUT = 1/(FREQIN*2*(DIVINT+DIVCOMP /(2^8))) FREQIN is always fixed to 40 MHz.

10002060 **DIGDELAY_CFG** **Digital delay config** **00000002**

Bit	31	30	29	28	27	26	25	24	23	22	21	20	19	18	17	16
Name	TXD_CLR_GL	CHEN_CLR_GL	RSV0			TXD_GLT_ST	RSV1			CHEN_GLT_S	RSV2			CHEP_GLT_S	RSV3	CHEPD_GLT_S

MEDIATEK CONFIDENTIAL
FOR Ralrwang@symnex.com.tw USE ONLY

This document contains information that is proprietary to MediaTek Inc.
Unauthorized reproduction or disclosure of this information in whole or in part is strictly prohibited.

	T	T								T				T		T
Type	RW	RW	RO			RW	RO			RW	RO			RW	RO	RW
Reset	0	0	0	0	0	0	0	0	0	0	0	0	0	0	0	0
Bit	15	14	13	12	11	10	9	8	7	6	5	4	3	2	1	0
Name	TXD_DIGDLY_EN	RSV4		TXD_DLYVAL					CHEN_DIGDLY_EN	RSV5		CHEN_DLYVAL				
Type	RW	RO		RW					RW	RO		RW				
Reset	0	0	0	0	0	0	0	0	0	0	0	0	0	0	1	0

Bit(s)	Name	Description
31	TXD_CLR_GLT	**TXD Clear Glitch Flag** Clears the glitch detected flag for TXD. 0: No effect. 1: Clear the flag.
30	CHEN_CLR_GLT	**Channel Enable (CHEN) Clear Glitch Flag** Clears the glitch detected flag for CHEN. 0: No effect . 1: Clear the flag.
29:27	RSV0	**Reserved**
26	TXD_GLT_ST	**TXD Glitch Status** Indicates if a glitch is detected in a TXD signal. It can be cleared by bit[31]. 0: Not detected. 1: Detected
25:23	RSV1	**Reserved**
22	CHENN_GLT_ST	**CHEN Negative Glitch Status** Indicates if a glitch is detected in a CHEN signal. It can be cleared by bit[30] (negedge sample). 0: Not detected. 1: Detected
21:19	RSV2	**Reserved**
18	CHENP_GLT_ST	**CHEN Positive Glitch Status** Indicates if a glitch is detected in a CHEN signal. It can be cleared by bit[30] (posedge sample). 0: Not detected. 1: Detected
17	RSV3	**Reserved**
16	CHENPD_GLT_ST	**CHEN Positive Delay Glitch Status** Indicates if a glitch is detected in a CHEN signal. It can be cleared by bit[30] (posedge sample, delay 1 cycle). 0: Not detected. 1: Detected
15	TXD_DIGDLY_EN	**TXD Digital Delay Enable** Enables digital delay path. 0: Disable 1: Enable
14:13	RSV4	**Reserved**
12:8	TXD_DLYVAL	**Delay Count Value** The description is the same as the CHEN_DLYVAL field in this register. CHEN Digital Delay Enable, Enables the digital delay path. 0: Disable 1: Enable
7	CHEN_DIGDLY_EN	**CHEN Digital Delay Enable** Enables the digital delay path.

MEDIATEK CONFIDENTIAL
FOR fairwang@symmx.com.tw USE ONLY

This document contains information that is proprietary to MediaTek Inc.
Unauthorized reproduction or disclosure of this information in whole or in part is strictly prohibited.

Bit(s)	Name	Description
		0: Disable 1: Enable
6:5	RSV5	**Reserved**
4:0	CHEN_DLYVAL	**Delay Count Value** The delay error = CLK_PERIOD * (SYNC_DELAY + SYNC_DELTA + (DLYCNT_CFG) + 1) For example, DLYCNT_CFG = 4, (SYNC_DELAY is always fixed to 4) Final Delay = CLK_PERIOD * (2 + (-1/0/+1) + (4) + 1) = CLK_PERIOD * (6/7/8)= CLK_PERIOD * (6 to 8) = 25 ns to 33.3 ns NOTE: Period is 1/240 MHz = 4.1667 ns in MT7620.

10002080 **CH0_FIFO** **Channel 0 FIFO access point** **00000000**

Bit	31	30	29	28	27	26	25	24	23	22	21	20	19	18	17	16
Name	CH0_FIFO[31:16]															
Type	RW															
Reset	0	0	0	0	0	0	0	0	0	0	0	0	0	0	0	0
Bit	15	14	13	12	11	10	9	8	7	6	5	4	3	2	1	0
Name	CH0_FIFO[15:0]															
Type	RW															
Reset	0	0	0	0	0	0	0	0	0	0	0	0	0	0	0	0

Bit(s)	Name	Description
31:0	CH0_FIFO	**Channel 0 FIFO access point**

10002084 **CH1_FIFO** **Channel 1 FIFO access point** **00000000**

Bit	31	30	29	28	27	26	25	24	23	22	21	20	19	18	17	16
Name	CH1_FIFO[31:16]															
Type	RW															
Reset	0	0	0	0	0	0	0	0	0	0	0	0	0	0	0	0
Bit	15	14	13	12	11	10	9	8	7	6	5	4	3	2	1	0
Name	CH1_FIFO[15:0]															
Type	RW															
Reset	0	0	0	0	0	0	0	0	0	0	0	0	0	0	0	0

Bit(s)	Name	Description
31:0	CH1_FIFO	**Channel 1 FIFO access point**

10002088 **CH2_FIFO** **Channel 2 FIFO access point** **00000000**

Bit	31	30	29	28	27	26	25	24	23	22	21	20	19	18	17	16
Name	CH2_FIFO[31:16]															
Type	RW															
Reset	0	0	0	0	0	0	0	0	0	0	0	0	0	0	0	0
Bit	15	14	13	12	11	10	9	8	7	6	5	4	3	2	1	0

MEDIATEK CONFIDENTIAL
FOR farrwang@symtek.com.tw USE ONLY

This document contains information that is proprietary to MediaTek Inc.
Unauthorized reproduction or disclosure of this information in whole or in part is strictly prohibited.

Name	CH2_FIFO[15:0]															
Type	RW															
Reset	0	0	0	0	0	0	0	0	0	0	0	0	0	0	0	0

Bit(s)	Name	Description
31:0	CH2_FIFO	**Channel 2 FIFO access point**

1000208C **CH3_FIFO** **Channel 3 FIFO access point** **00000000**

Bit	31	30	29	28	27	26	25	24	23	22	21	20	19	18	17	16
Name	CH3_FIFO[31:16]															
Type	RW															
Reset	0	0	0	0	0	0	0	0	0	0	0	0	0	0	0	0
Bit	15	14	13	12	11	10	9	8	7	6	5	4	3	2	1	0
Name	CH3_FIFO[15:0]															
Type	RW															
Reset	0	0	0	0	0	0	0	0	0	0	0	0	0	0	0	0

Bit(s)	Name	Description
31:0	CH3_FIFO	**Channel 3 FIFO access point**

10002110 **CHA1_FF_STATUS** **Channel A1(represents channel 3) FIFO status** **00100008**

Bit	31	30	29	28	27	26	25	24	23	22	21	20	19	18	17	16
Name	RSV0								CHTX_DMA_FAULT	CHTX_OVRUN	CHTX_UNRUN	CHTX_THRES	CHRX_DMA_FAULT	CHRX_OVRUN	CHRX_UNRUN	CHRX_THRES
Type	RO								W1C	W1C	W1C	W1C	W1C	W1C	W1C	W1C
Reset	0	0	0	0	0	0	0	0	0	0	0	1	0	0	0	0
Bit	15	14	13	12	11	10	9	8	7	6	5	4	3	2	1	0
Name	RSV1								CHRFF_AVCNT				CHTFF_EPCNT			
Type	RO								RO				RO			
Reset	0	0	0	0	0	0	0	0	0	0	0	0	1	0	0	0

Bit(s)	Name	Description
31:24	RSV0	**Reserved**
23	CHTX_DMA_FAULT	**Tx DMA Fault Detected Interrupt,Asserts when a fault is detected in a Channel A1 Tx DMA signal.**
22	CHTX_OVRUN	**Tx Overrun Interrupt,Asserts when the Channel A0 Tx FIFO is overrun.**
21	CHTX_UNRUN	**Tx FIFO Underrun Interrupt,Asserts when the Channel A1 Tx FIFO is underrun.**
20	CHTX_THRES	**Tx FIFO Below Threshold Interrupt,Asserts when the Channel A0 FIFO is lower than the defined threshold.**
19	CHRX_DMA_FAULT	**Rx DMA Fault Detected Interrupt,Asserts when a fault is detected in a Channel A1 Rx DMA signal.**
18	CHRX_OVRUN	**Rx FIFO Overrun Interrupt,Asserts when the Channel A1 Rx FIFO is overrun.**
17	CHRX_UNRUN	**Rx FIFO Underrun Interrupt,Asserts when the Channel A1 Rx FIFO is underrun.**

MEDIATEK CONFIDENTIAL
FOR farwang@symnex.com.tw USE ONLY

This document contains information that is proprietary to MediaTek Inc.
Unauthorized reproduction or disclosure of this information in whole or in part is strictly prohibited.

Bit(s)	Name	Description
16	CHRX_THRES	**Rx FIFO Below Threshold Interrupt,Asserts when the Channel A1 FIFO is lower than the defined threshold.**
15:8	RSV1	**Reserved**
7:4	CHRFF_AVCNT	**Channel A1 RXFIFO Available Space Count,Counts the available space for reads in channel A1 RXFIFO.(unit: word)**
3:0	CHTFF_EPCNT	**Channel A1 TXFIFO Available Space Count,Counts the available space for writes in channel A1 TXFIFO.(unit: word)**

10002114 **CHB1_FF_STATUS** **Channel B1(represents channel 4) FIFO status** **00100008**

Bit	31	30	29	28	27	26	25	24	23	22	21	20	19	18	17	16
Name	RSV0								CHTX_DMA_FAULT	CHTX_OVRUN	CHTX_UNRUN	CHTX_THRES	CHRX_DMA_FAULT	CHRX_OVRUN	CHRX_UNRUN	CHRX_THRES
Type	RO								W1C	W1C	W1C	W1C	W1C	W1C	W1C	W1C
Reset	0	0	0	0	0	0	0	0	0	0	0	1	0	0	0	0
Bit	15	14	13	12	11	10	9	8	7	6	5	4	3	2	1	0
Name	RSV1								CHRFF_AVCNT				CHTFF_EPCNT			
Type	RO								RO				RO			
Reset	0	0	0	0	0	0	0	0	0	0	0	0	1	0	0	0

Bit(s)	Name	Description
31:24	RSV0	**Reserved**
23	CHTX_DMA_FAULT	**Tx DMA Fault Detected Interrupt,Asserts when a fault is detected in a Channel B1 Tx DMA signal.**
22	CHTX_OVRUN	**Tx Overrun Interrupt,Asserts when the Channel B0 Tx FIFO is overrun.**
21	CHTX_UNRUN	**Tx FIFO Underrun Interrupt,Asserts when the Channel B1 Tx FIFO is underrun.**
20	CHTX_THRES	**Tx FIFO Below Threshold Interrupt,Asserts when the Channel B1 FIFO is lower than the defined threshold.**
19	CHRX_DMA_FAULT	**Rx DMA Fault Detected Interrupt,Asserts when a fault is detected in a Channel B1 Rx DMA signal.**
18	CHRX_OVRUN	**Rx FIFO Overrun Interrupt,Asserts when the Channel B1 Rx FIFO is overrun.**
17	CHRX_UNRUN	**Rx FIFO Underrun Interrupt,Asserts when the Channel B1 Rx FIFO is underrun.**
16	CHRX_THRES	**Rx FIFO Below Threshold Interrupt,Asserts when the Channel B1 FIFO is lower than the defined threshold.**
15:8	RSV1	**Reserved**
7:4	CHRFF_AVCNT	**Channel B1 RXFIFO Available Space Count,Counts the available space for reads in channel B1 RXFIFO.(unit: word)**
3:0	CHTFF_EPCNT	**Channel B1 TXFIFO Available Space Count,Counts the available space for writes in channel B1 TXFIFO.(unit: word)**

10002120 **CHA1_CFG** **Channel A1(represents channel 3) Config** **00000001**

Bit	31	30	29	28	27	26	25	24	23	22	21	20	19	18	17	16

MEDIATEK CONFIDENTIAL
FOR farrvane@symnex.com.tw USE ONLY

This document contains information that is proprietary to MediaTek Inc.
Unauthorized reproduction or disclosure of this information in whole or in part is strictly prohibited.

Name	RSV0		CMP_MODE			RSV1[16:6]										
Type	RO		RW			RO										
Reset	0	0	0	0	0	0	0	0	0	0	0	0	0	0	0	0
Bit	15	14	13	12	11	10	9	8	7	6	5	4	3	2	1	0
Name	RSV1[5:0]						TS_START									
Type	RO						RW									
Reset	0	0	0	0	0	0	0	0	0	0	0	0	0	0	0	1

Bit(s)	Name	Description
31:30	RSV0	**Reserved**
29:27	CMP_MODE	**Compression Mode** Sets the conversion method for the hardware converter to compress raw data. 000: Disable HW converter, linear raw data (16-bit) 010: Disable HW converter, linear raw data (8-bit), A-law or u-law (8-bit) 011: Reserved 100: Enable HW converter, raw data(16-bit) U-law mode (8-bit) (PCM bus in compressed format) 101: Enable HW converter, u-law mode (8-bit) raw data (16-bit) (PCM bus in raw, 16-bit format) 110: Enable HW converter, raw data (16-bit) A-law mode (8-bit) (PCM bus in compressed format) 111: Enable HW converter, A-law mode (8-bit) raw data (16-bit) (PCM bus in raw, 16-bit format) 0: DIS_CONV16 2: DIS_CONV8 4: EN_ULW2R 5: EN_R2ULW 6: EN_ALW2R 7: EN_R2ALW
26:10	RSV1	**Reserved**
9:0	TS_START	**Timeslot starting location** (unit: clock cycles)

10002124 **CHB1_CFG** **Channel B1(represents channel 1) Config** **00000001**

Bit	31	30	29	28	27	26	25	24	23	22	21	20	19	18	17	16
Name	RSV0		CMP_MODE			RSV1[16:6]										
Type	RO		RW			RO										
Reset	0	0	0	0	0	0	0	0	0	0	0	0	0	0	0	0
Bit	15	14	13	12	11	10	9	8	7	6	5	4	3	2	1	0
Name	RSV1[5:0]						TS_START									
Type	RO						RW									
Reset	0	0	0	0	0	0	0	0	0	0	0	0	0	0	0	1

Bit(s)	Name	Description
31:30	RSV0	**Reserved**
29:27	CMP_MODE	**Compression Mode** Sets the conversion method for the hardware converter to compress raw data. 000: Disable HW converter, linear raw data (16-bit) 010: Disable HW converter, linear raw data (8-bit), A-law or u-law (8-bit) 011: Reserved 100: Enable HW converter, raw data(16-bit) U-law mode (8-bit) (PCM bus in compressed format) 101: Enable HW converter, u-law mode (8-bit) raw data (16-bit) (PCM bus in raw, 16-bit format)

MEDIATEK CONFIDENTIAL
FOR farrwang@symnex.com.tw USE ONLY

This document contains information that is proprietary to MediaTek Inc.
Unauthorized reproduction or disclosure of this information in whole or in part is strictly prohibited.

Bit(s)	Name	Description
		110: Enable HW converter, raw data (16-bit) A-law mode (8-bit) (PCM bus in compressed format) 111: Enable HW converter, A-law mode (8-bit) raw data (16-bit) (PCM bus in raw, 16-bit format) 0: DIS_CONV16 2: DIS_CONV8 4: EN_ULW2R 5: EN_R2ULW 6: EN_ALW2R 7: EN_R2ALW
26:10	RSV1	**Reserved**
9:0	TS_START	**Timeslot starting location** (unit: clock cycles)

10002134 **CHA1_CFG2** **Channel A1(represents channel 3) Config** **00000000**

Bit	31	30	29	28	27	26	25	24	23	22	21	20	19	18	17	16
Name	RSV0[27:12]															
Type	RO															
Reset	0	0	0	0	0	0	0	0	0	0	0	0	0	0	0	0
Bit	15	14	13	12	11	10	9	8	7	6	5	4	3	2	1	0
Name	RSV0[11:0]												CH_RXFF_CLR	CH_TXFF_CLR	RSV1	CH_LSB
Type	RO												RW	RW	RO	RW
Reset	0	0	0	0	0	0	0	0	0	0	0	0	0	0	0	0

Bit(s)	Name	Description
31:4	RSV0	**Reserved**
3	CH_RXFF_CLR	**Channel A1 Rx FIFO Clear** 0: Normal operation 1: Clear this bit
2	CH_TXFF_CLR	**Channel A1 Tx FIFO Clear** 0: Normal operation 1: Clear this bit
1	RSV1	**Reserved**
0	CH_LSB	**Enable CH A1 Tx in LSB order.**

10002138 **CHB1_CFG2** **Channel B1(represents channel 4) Config** **00000000**

Bit	31	30	29	28	27	26	25	24	23	22	21	20	19	18	17	16
Name	RSV0[27:12]															
Type	RO															
Reset	0	0	0	0	0	0	0	0	0	0	0	0	0	0	0	0
Bit	15	14	13	12	11	10	9	8	7	6	5	4	3	2	1	0
Name	RSV0[11:0]												CH_RXFF_CLR	CH_TXFF_CLR	RSV1	CH_LSB
Type	RO												RW	RW	RO	RW
Reset	0	0	0	0	0	0	0	0	0	0	0	0	0	0	0	0

FOR MEDIATEK CONFIDENTIAL
fairwang@ymex.com.tw USE ONLY

© 2014 MediaTek Inc.

This document contains information that is proprietary to MediaTek Inc.
Unauthorized reproduction or disclosure of this information in whole or in part is strictly prohibited.

Bit(s)	Name	Description
31:4	RSV0	**Reserved**
3	CH_RXFF_CLR	**Channel B1 Rx FIFO Clear** 0: Normal operation 1: Clear this bit
2	CH_TXFF_CLR	**Channel B1 Tx FIFO Clear** 0: Normal operation 1: Clear this bit
1	RSV1	**Reserved**
0	CH_LSB	**Enable CH B1 Tx in LSB order.**

MEDIATEK CONFIDENTIAL
FOR farrwang@ synnex.com.tw USE ONLY

This document contains information that is proprietary to MediaTek Inc.
Unauthorized reproduction or disclosure of this information in whole or in part is strictly prohibited.

2.15 Generic DMA Controller

2.15.1 Features

- Supports 16 DMA channels
- Supports 32 bit address.
- Maximum 65535 byte transfer
- Programmable DMA burst size (1, 2, 4, 8, 16 double word burst)
- Supports memory to memory, memory to peripheral, peripheral to memory, peripheral to peripheral transfers.
- Supports continuous mode.
- Supports division of target transfer count into 1 to 256 segments
- Support for combining different channels into a chain.
- Programmable hardware channel priority.
- Interrupts for each channel.

2.15.2 Block Diagram

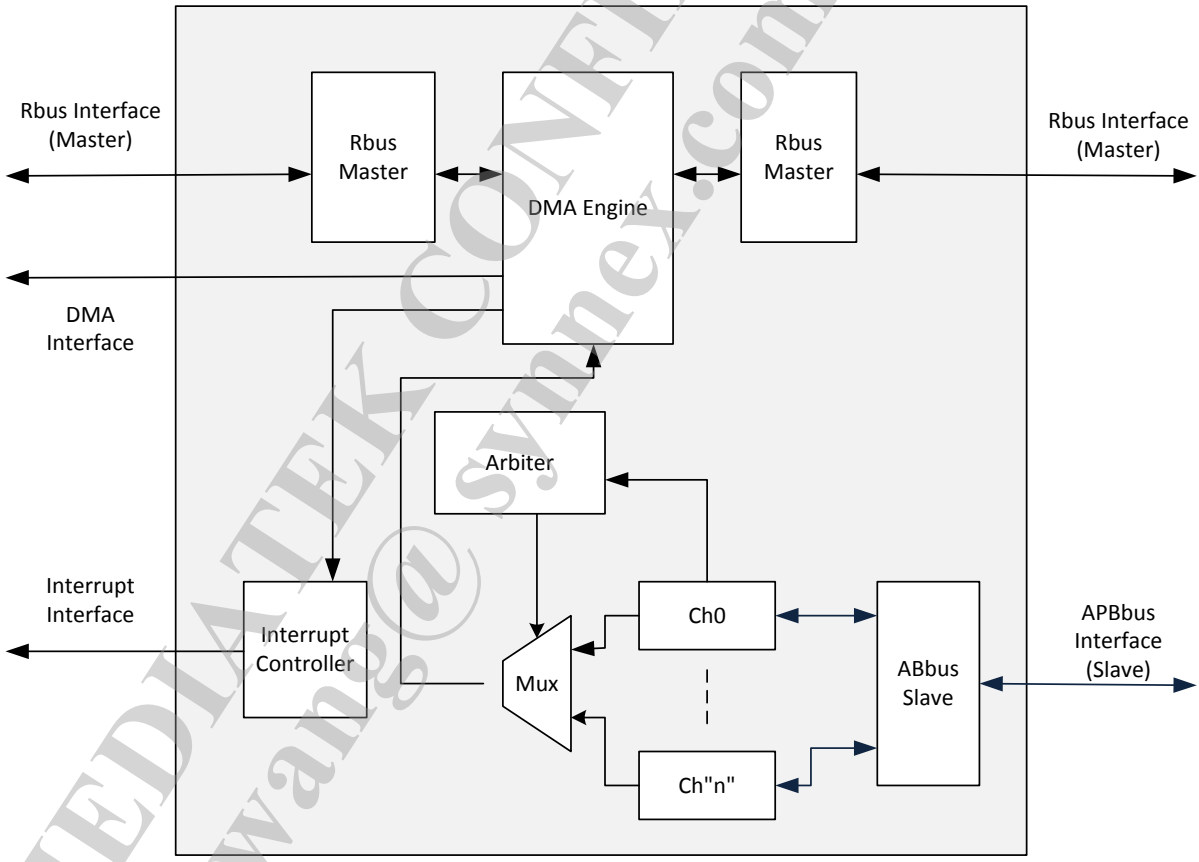

Figure 2-9 Generic DMA Controller Block Diagram

2.15.3 Peripheral Channel Connection

Channel number	Peripheral
0	Reserved
1	Reserved

MEDIATEK CONFIDENTIAL
FOR farrwang@symnex.com.tw USE ONLY

This document contains information that is proprietary to MediaTek Inc.
Unauthorized reproduction or disclosure of this information in whole or in part is strictly prohibited.

Channel number	Peripheral
2	I2S Controller (TXDMA)
3	I2S Controller (RXDMA)
4	PCM Controller (RDMA, channel-0)
5	PCM Controller (RDMA, channel-1)
6	PCM Controller (TDMA, channel-0)
7	PCM Controller (TDMA, channel-1)
8	PCM Controller (RDMA, channel-2)
9	PCM Controller (RDMA, channel-3)
10	PCM Controller (TDMA, channel-2)
11	PCM Controller (TDMA, channel-3)
12	SPI Controller (RXDMA)
13	SPI Controller (TXDMA)
8 to 15	Reserved

2.15.4 Registers

GDMA Changes LOG

Revision	Date	Author	Change Log
0.1	2012/10/15	Mark Wang	Initialization

Module name: GDMA Base address: (+10002800h)

Address	Name	Width	Register Function
10002800	GDMA_SA_0	32	Source Address of GDMA Channel 0
10002804	GDMA_DA_0	32	Destination Address of GDMA Channel 0
10002808	GDMA_CT0_0	32	Control Register 0 of GDMA Channel 0
1000280C	GDMA_CT1_0	32	Control Register 1 of GDMA Channel 0
10002810	GDMA_SA_1	32	Source Address of GDMA Channel 1
10002814	GDMA_DA_1	32	Destination Address of GDMA Channel 1
10002818	GDMA_CT0_1	32	Control Register 0 of GDMA Channel 1
1000281C	GDMA_CT1_1	32	Control Register 1 of GDMA Channel 1
10002820	GDMA_SA_2	32	Source Address of GDMA Channel 2
10002824	GDMA_DA_2	32	Destination Address of GDMA Channel 2
10002828	GDMA_CT0_2	32	Control Register 0 of GDMA Channel 2
1000282C	GDMA_CT1_2	32	Control Register 1 of GDMA Channel 2
10002830	GDMA_SA_3	32	Source Address of GDMA Channel 3
10002834	GDMA_DA_3	32	Destination Address of GDMA Channel 3
10002838	GDMA_CT0_3	32	Control Register 0 of GDMA Channel 3
1000283C	GDMA_CT1_3	32	Control Register 1 of GDMA Channel 3
10002840	GDMA_SA_4	32	Source Address of GDMA Channel 4
10002844	GDMA_DA_4	32	Destination Address of GDMA Channel 4
10002848	GDMA_CT0_4	32	Control Register 0 of GDMA Channel 4
1000284C	GDMA_CT1_4	32	Control Register 1 of GDMA Channel 4
10002850	GDMA_SA_5	32	Source Address of GDMA Channel 5

FOR MEDIATEK CONFIDENTIAL USE ONLY
fortiang@symtex.com.tw

This document contains information that is proprietary to MediaTek Inc.
Unauthorized reproduction or disclosure of this information in whole or in part is strictly prohibited.

10002854	GDMA_DA_5	32	Destination Address of GDMA Channel 5
10002858	GDMA_CT0_5	32	Control Register 0 of GDMA Channel 5
1000285C	GDMA_CT1_5	32	Control Register 1 of GDMA Channel 5
10002860	GDMA_SA_6	32	Source Address of GDMA Channel 6
10002864	GDMA_DA_6	32	Destination Address of GDMA Channel 6
10002868	GDMA_CT0_6	32	Control Register 0 of GDMA Channel 6
1000286C	GDMA_CT1_6	32	Control Register 1 of GDMA Channel 6
10002870	GDMA_SA_7	32	Source Address of GDMA Channel 7
10002874	GDMA_DA_7	32	Destination Address of GDMA Channel 7
10002878	GDMA_CT0_7	32	Control Register 0 of GDMA Channel 7
1000287C	GDMA_CT1_7	32	Control Register 1 of GDMA Channel 7
10002880	GDMA_SA_8	32	Source Address of GDMA Channel 8
10002884	GDMA_DA_8	32	Destination Address of GDMA Channel 8
10002888	GDMA_CT0_8	32	Control Register 0 of GDMA Channel 8
1000288C	GDMA_CT1_8	32	Control Register 1 of GDMA Channel 8
10002890	GDMA_SA_9	32	Source Address of GDMA Channel 9
10002894	GDMA_DA_9	32	Destination Address of GDMA Channel 9
10002898	GDMA_CT0_9	32	Control Register 0 of GDMA Channel 9
1000289C	GDMA_CT1_9	32	Control Register 1 of GDMA Channel 9
100028A0	GDMA_SA_10	32	Source Address of GDMA Channel 10
100028A4	GDMA_DA_10	32	Destination Address of GDMA Channel 10
100028A8	GDMA_CT0_10	32	Control Register 0 of GDMA Channel 10
100028AC	GDMA_CT1_10	32	Control Register 1 of GDMA Channel 10
100028B0	GDMA_SA_11	32	Source Address of GDMA Channel 11
100028B4	GDMA_DA_11	32	Destination Address of GDMA Channel 11
100028B8	GDMA_CT0_11	32	Control Register 0 of GDMA Channel 11
100028BC	GDMA_CT1_11	32	Control Register 1 of GDMA Channel 11
100028C0	GDMA_SA_12	32	Source Address of GDMA Channel 12
100028C4	GDMA_DA_12	32	Destination Address of GDMA Channel 12
100028C8	GDMA_CT0_12	32	Control Register 0 of GDMA Channel 12
100028CC	GDMA_CT1_12	32	Control Register 1 of GDMA Channel 12
100028D0	GDMA_SA_13	32	Source Address of GDMA Channel 13
100028D4	GDMA_DA_13	32	Destination Address of GDMA Channel 13
100028D8	GDMA_CT0_13	32	Control Register 0 of GDMA Channel 13
100028DC	GDMA_CT1_13	32	Control Register 1 of GDMA Channel 13
100028E0	GDMA_SA_14	32	Source Address of GDMA Channel 14
100028E4	GDMA_DA_14	32	Destination Address of GDMA Channel 14
100028E8	GDMA_CT0_14	32	Control Register 0 of GDMA Channel 14
100028EC	GDMA_CT1_14	32	Control Register 1 of GDMA Channel 14
100028F0	GDMA_SA_15	32	Source Address of GDMA Channel 15
100028F4	GDMA_DA_15	32	Destination Address of GDMA Channel 15
100028F8	GDMA_CT0_15	32	Control Register 0 of GDMA Channel 15
100028FC	GDMA_CT1_15	32	Control Register 1 of GDMA Channel 15
10002A00	GDMA_UNMASK_INTSTS	32	Unmask Fail Interrupt Status
10002A04	GDMA_DONE_INTSTS	32	Segment Done Interrupt Status
10002A20	GDMA_GCT	32	Global Control

MEDIATEK CONFIDENTIAL
FOR fanfang@SYNACOR USE ONLY

This document contains information that is proprietary to MediaTek Inc.
Unauthorized reproduction or disclosure of this information in whole or in part is strictly prohibited.

10002A30	GDMA_PERI_ADDR_START_0	32	**Peripheral Region 0 Starting Address**
10002A34	GDMA_PERI_ADDR_END_0	32	**Peripheral Region 0 End Address**
10002A38	GDMA_PERI_ADDR_START_1	32	**Peripheral Region 1 Starting Address**
10002A3C	GDMA_PERI_ADDR_END_1	32	**Peripheral Region 1 End Address**
10002A40	GDMA_PERI_ADDR_START_2	32	**Peripheral Region 2 Starting Address**
10002A44	GDMA_PERI_ADDR_END_2	32	**Peripheral Region 2 End Address**
10002A48	GDMA_PERI_ADDR_START_3	32	**Peripheral Region 3 Starting Address**
10002A4C	GDMA_PERI_ADDR_END_3	32	**Peripheral Region 3 End Address**

10002800 GDMA_SA_0 Source Address of GDMA Channel 0 00000000

Bit	31	30	29	28	27	26	25	24	23	22	21	20	19	18	17	16
Name	SOURCE_ADDR[31:16]															
Type	RW															
Reset	0	0	0	0	0	0	0	0	0	0	0	0	0	0	0	0
Bit	15	14	13	12	11	10	9	8	7	6	5	4	3	2	1	0
Name	SOURCE_ADDR[15:0]															
Type	RW															
Reset	0	0	0	0	0	0	0	0	0	0	0	0	0	0	0	0

Bit(s)	Name	Description
31:0	SOURCE_ADDR	**Souce address**

10002804 GDMA_DA_0 Destination Address of GDMA Channel 0 00000000

Bit	31	30	29	28	27	26	25	24	23	22	21	20	19	18	17	16
Name	DEST_ADDR[31:16]															
Type	RW															
Reset	0	0	0	0	0	0	0	0	0	0	0	0	0	0	0	0
Bit	15	14	13	12	11	10	9	8	7	6	5	4	3	2	1	0
Name	DEST_ADDR[15:0]															
Type	RW															
Reset	0	0	0	0	0	0	0	0	0	0	0	0	0	0	0	0

Bit(s)	Name	Description
31:0	DEST_ADDR	**Destination address**

10002808 GDMA_CT0_0 Control Register 0 of GDMA Channel 0 00000000

Bit	31	30	29	28	27	26	25	24	23	22	21	20	19	18	17	16
Name	TARGET_BYTE_CNT															
Type	RW															
Reset	0	0	0	0	0	0	0	0	0	0	0	0	0	0	0	0

MEDIATEK CONFIDENTIAL
FOR farrwang@symnetcom.tw USE ONLY

This document contains information that is proprietary to MediaTek Inc.
Unauthorized reproduction or disclosure of this information in whole or in part is strictly prohibited.

Bit	15	14	13	12	11	10	9	8	7	6	5	4	3	2	1	0
Name	CURR_SEGMENT								SOURCE_ADDR_MODE	DEST_ADDR_MODE	BURST_SIZE			SEGMENT_DONE_INT_EN	CH_EN	SW_MODE_EN
Type	RO								RW	RW	RW			RW	RW	RW
Reset	0	0	0	0	0	0	0	0	0	0	0	0	0	0	0	0

Bit(s)	Name	Description
31:16	TARGET_BYTE_CNT	**The number of bytes to be transferred**
15:8	CURR_SEGMENT	**Indicates the current segment (0 to 255)**
7	SOURCE_ADDR_MODE	**Sets the source address mode** 0: Incremental mode 1: Fix mode
6	DEST_ADDR_MODE	**Sets the destination address mode** 0: Incremental mode 1: Fix mode
5:3	BURST_SIZE	**Sets the number of double words in each burst transaction** 0: 1 DW 1: 2 DWs 2: 4 DWs 3: 8 DWs 4: 16 DWs 5: Undefined 6: Undefined 7: Undefined
2	SEGMENT_DONE_INT_EN	**Enable the segment done interrupt. This interrupt asserts after transfer of each segment is done.** 0: Disable 1: Enable
1	CH_EN	**If CONT_MODE_EN=0, this bit is de-asserted by hardware after the number of bytes transfferred reaches the TARGET_BYTE_CNT** 0: Disable 1: Enable
0	SW_MODE_EN	**Software mode enable. If software mode enable is set, the data transfer starts when the CH_EN bit is set. Otherwise, the data transfer starts when the DMA request is asserted.** 0: Hardware mode 1: Software mode

1000280C **GDMA_CT1_0** **Control Register 1 of GDMA Channel 0** **00000000**

Bit	31	30	29	28	27	26	25	24	23	22	21	20	19	18	17	16
Name	RESERVED						NUM_SEGMENT				SOURCE_DMA_REQ					
Type	RO						RW				RW					
Reset	0	0	0	0	0	0	0	0	0	0	0	0	0	0	0	0
Bit	15	14	13	12	11	10	9	8	7	6	5	4	3	2	1	0
Name	RESERVED	CONT_MODE_EN	DEST_DMA_REQ						NEXT_CH2UNMASK					COHERENT_INT	CH_UNMASK_F	CH_MASK

FOR MEDIATEK CONFIDENTIAL
FOR TAIWANONLY, synnex.com.tw USE ONLY

This document contains information that is proprietary to MediaTek Inc.
Unauthorized reproduction or disclosure of this information in whole or in part is strictly prohibited.

														_EN	AIL_IN T_E N	
Type	RO	RW	RW						RW					RW	RW	RW
Reset	0	0	0	0	0	0	0	0	0	0	0	0	0	0	0	0

Bit(s)	Name	Description
25:22	NUM_SEGMENT	**the number of segments=2N, where N is the value of this field. Valid values for this field are N=0 to 8. The segment size=(TARGET_BYTE_CNT/2N). It the TARGET_BYTE_CNT is not a multiple of 2N, the segment size = {(TARGET_BYTE_CNT/2N) + 1}.**
21:16	SOURCE_DMA_REQ	**Selects the source DMA request** 0: DMA_REQ0 1: DMA_REQ1 2: DMA_REQ2 32: The source of the transfer is memory (always ready)
14	CONT_MODE_EN	**If CONT_MODE_EN=1, HW will NOT clear CH_EN after the number of bytes transferred reachs TARGET_BYTE_CNT. Otherwise, HW will clear CH_EN will clear the CH_EN.** 0: Continuous mode is disabled 1: Continuous mode is enabled
13:8	DEST_DMA_REQ	**Selects the destination DMA request** 0: DMA_REQ0 1: DMA_REQ1 2: DMA_REQ2 32: The destination of the transfer is memory (always ready)
7:3	NEXT_CH2UNMASK	**Selects the channel to clear the CH_MASK bit. When the number of bytes transferred reaches the TARGET_BYTE_CNT, the hardware will clear the CH_MASK field of the NEXT_CH2UNMASK channel. If the hardware does not need to clear CH_MASK field of any channel, this field should be set to the channel itself.** 0: Channel 0 1: Channel 1 n: Channel n
2	COHERENT_INT_EN	**If COHERENT_INT_EN is set, GDMA will issue a dummy read to destination after the last write to destination to avoid data coherent problem. Note: DO NOT set this field if the destination is not MEM. (may corrupt data, if destination is a FIFO)** 0: Disable 1: Enable
1	CH_UNMASK_FAIL_INT_EN	**If this field is set, an interrupt will be assert when HW detect the CH_MASK field of NEXT_CH2UNMASK channel is 1'b0 while trying to clear it.** 0: Disable 1: Enable
0	CH_MASK	**When this field is set, the transfer of this channel is gated untill this field is clear by HW/SW.** 0: Channel is not masked 1: Channel is masked

10002810 GDMA_SA_1 Source Address of GDMA Channel 1 00000000

Bit	31	30	29	28	27	26	25	24	23	22	21	20	19	18	17	16
Name	SOURCE_ADDR[31:16]															
Type	RW															

This document contains information that is proprietary to MediaTek Inc.
Unauthorized reproduction or disclosure of this information in whole or in part is strictly prohibited.

Reset	0	0	0	0	0	0	0	0	0	0	0	0	0	0	0	0
Bit	15	14	13	12	11	10	9	8	7	6	5	4	3	2	1	0
Name	**SOURCE_ADDR[15:0]**															
Type	RW															
Reset	0	0	0	0	0	0	0	0	0	0	0	0	0	0	0	0

Bit(s)	Name	Description
31:0	SOURCE_ADDR	**Souce address**

10002814 GDMA_DA_1 Destination Address of GDMA Channel 1 00000000

Bit	31	30	29	28	27	26	25	24	23	22	21	20	19	18	17	16
Name	**DEST_ADDR[31:16]**															
Type	RW															
Reset	0	0	0	0	0	0	0	0	0	0	0	0	0	0	0	0
Bit	15	14	13	12	11	10	9	8	7	6	5	4	3	2	1	0
Name	**DEST_ADDR[15:0]**															
Type	RW															
Reset	0	0	0	0	0	0	0	0	0	0	0	0	0	0	0	0

Bit(s)	Name	Description
31:0	DEST_ADDR	**Destination address**

10002818 GDMA_CT0_1 Control Register 0 of GDMA Channel 1 00000000

Bit	31	30	29	28	27	26	25	24	23	22	21	20	19	18	17	16
Name	**TARGET_BYTE_CNT**															
Type	RW															
Reset	0	0	0	0	0	0	0	0	0	0	0	0	0	0	0	0
Bit	15	14	13	12	11	10	9	8	7	6	5	4	3	2	1	0
Name	**CURR_SEGMENT**								**SOURCE_ADDR_MODE**	**DEST_ADDR_MODE**	**BURST_SIZE**			**SEGMENT_DONE_INT_EN**	**CH_EN**	**SW_MODE_EN**
Type	RO								RW	RW	RW			RW	RW	RW
Reset	0	0	0	0	0	0	0	0	0	0	0	0	0	0	0	0

Bit(s)	Name	Description
31:16	TARGET_BYTE_CNT	**The number of bytes to be transferred**
15:8	CURR_SEGMENT	**Indicates the current segment (0 to 255)**
7	SOURCE_ADDR_MODE	**Sets the source address mode** 0: Incremental mode 1: Fix mode
6	DEST_ADDR_MODE	**Sets the destination address mode** 0: Incremental mode 1: Fix mode
5:3	BURST_SIZE	**Sets the number of double words in each burst transaction** 0: 1 DW 1: 2 DWs

MEDIATEK CONFIDENTIAL
FOR farrwang@symtex.com.tw USE ONLY

This document contains information that is proprietary to MediaTek Inc.
Unauthorized reproduction or disclosure of this information in whole or in part is strictly prohibited.

Bit(s)	Name	Description
		2: 4 DWs 3: 8 DWs 4: 16 DWs 5: Undefined 6: Undefined 7: Undefined
2	SEGMENT_DONE_INT_EN	**Enable the segment done interrupt. This interrupt asserts after transfer of each segment is done.** 0: Disable 1: Enable
1	CH_EN	**If CONT_MODE_EN=0, this bit is de-asserted by hardware after the number of bytes transfferred reaches the TARGET_BYTE_CNT** 0: Disable 1: Enable
0	SW_MODE_EN	**Software mode enable. If software mode enable is set, the data transfer starts when the CH_EN bit is set. Otherwise, the data transfer starts when the DMA request is asserted.** 0: Hardware mode 1: Software mode

1000281C **GDMA_CT1_1** **Control Register 1 of GDMA Channel 1** **00000000**

Bit	31	30	29	28	27	26	25	24	23	22	21	20	19	18	17	16
Name	RESERVED						NUM_SEGMENT				SOURCE_DMA_REQ					
Type	RO						RW				RW					
Reset	0	0	0	0	0	0	0	0	0	0	0	0	0	0	0	0
Bit	15	14	13	12	11	10	9	8	7	6	5	4	3	2	1	0
Name	RESERVED	CONT_MODE_EN	DEST_DMA_REQ						NEXT_CH2UNMASK					COHERENT_INT_EN	CH_UNMASK_FAIL_INT_EN	CH_MASK
Type	RO	RW	RW						RW					RW	RW	RW
Reset	0	0	0	0	0	0	0	0	0	0	0	0	0	0	0	0

Bit(s)	Name	Description
25:22	NUM_SEGMENT	**the number of segments=2N, where N is the value of this field. Valid values for this field are N=0 to 8. The segment size=(TARGET_BYTE_CNT/2N). It the TARGET_BYTE_CNT is not a multiple of 2N, the segment size = {(TARGET_BYTE_CNT/2N) + 1}.**
21:16	SOURCE_DMA_REQ	**Selects the source DMA request** 0: DMA_REQ0 1: DMA_REQ1 2: DMA_REQ2 32: The source of the transfer is memory (always ready)
14	CONT_MODE_EN	**If CONT_MODE_EN=1, HW will NOT clear CH_EN after the number of bytes transferred reachs TARGET_BYTE_CNT. Otherwise, HW will clear CH_EN will clear the CH_EN.** 0: Continuous mode is disabled 1: Continuous mode is enabled
13:8	DEST_DMA_REQ	**Selects the destination DMA request** 0: DMA_REQ0

MEDIATEK CONFIDENTIAL
FOR farrwang@symtex.com.tw USE ONLY

This document contains information that is proprietary to MediaTek Inc.
Unauthorized reproduction or disclosure of this information in whole or in part is strictly prohibited.

Bit(s)	Name	Description
		1: DMA_REQ1 2: DMA_REQ2 32: The destination of the transfer is memory (always ready)
7:3	NEXT_CH2UNMASK	**Selects the channel to clear the CH_MASK bit. When the number of bytes transferred reaches the TARGET_BYTE_CNT, the hardware will clear the CH_MASK field of the NEXT_CH2UNMASK channel. If the hardware does not need to clear CH_MASK field of any channel, this field should be set to the channel itself.** 0: Channel 0 1: Channel 1 n: Channel n
2	COHERENT_INT_EN	**If COHERENT_INT_EN is set, GDMA will issue a dummy read to destination after the last write to destination to avoid data coherent problem. Note: DO NOT set this field if the destination is not MEM. (may corrupt data, if destination is a FIFO)** 0: Disable 1: Enable
1	CH_UNMASK_FAIL_INT_EN	**If this field is set, an interrupt will be assert when HW detect the CH_MASK field of NEXT_CH2UNMASK channel is 1'b0 while trying to clear it.** 0: Disable 1: Enable
0	CH_MASK	**When this field is set, the transfer of this channel is gated untill this field is clear by HW/SW.** 0: Channel is not masked 1: Channel is masked

10002820 **GDMA_SA_2** **Source Address of GDMA Channel 2** **00000000**

Bit	31	30	29	28	27	26	25	24	23	22	21	20	19	18	17	16
Name	SOURCE_ADDR[31:16]															
Type	RW															
Reset	0	0	0	0	0	0	0	0	0	0	0	0	0	0	0	0
Bit	15	14	13	12	11	10	9	8	7	6	5	4	3	2	1	0
Name	SOURCE_ADDR[15:0]															
Type	RW															
Reset	0	0	0	0	0	0	0	0	0	0	0	0	0	0	0	0

Bit(s)	Name	Description
31:0	SOURCE_ADDR	**Souce address**

10002824 **GDMA_DA_2** **Destination Address of GDMA Channel 2** **00000000**

Bit	31	30	29	28	27	26	25	24	23	22	21	20	19	18	17	16
Name	DEST_ADDR[31:16]															
Type	RW															
Reset	0	0	0	0	0	0	0	0	0	0	0	0	0	0	0	0
Bit	15	14	13	12	11	10	9	8	7	6	5	4	3	2	1	0
Name	DEST_ADDR[15:0]															
Type	RW															
Reset	0	0	0	0	0	0	0	0	0	0	0	0	0	0	0	0

Bit(s)	Name	Description

FOR MEDIATEK CONFIDENTIAL ONLY
fanrwang@symnex.com.tw USE

This document contains information that is proprietary to MediaTek Inc.
Unauthorized reproduction or disclosure of this information in whole or in part is strictly prohibited.

Bit(s)	Name	Description
31:0	DEST_ADDR	**Destination address**

10002828 GDMA_CT0_2 Control Register 0 of GDMA Channel 2 00000000

Bit	31	30	29	28	27	26	25	24	23	22	21	20	19	18	17	16
Name	TARGET_BYTE_CNT															
Type	RW															
Reset	0	0	0	0	0	0	0	0	0	0	0	0	0	0	0	0
Bit	15	14	13	12	11	10	9	8	7	6	5	4	3	2	1	0
Name	CURR_SEGMENT								SOURCE_ADDR_MODE	DEST_ADDR_MODE	BURST_SIZE			SEGMENT_DONE_INT_EN	CH_EN	SW_MODE_EN
Type	RO								RW	RW	RW			RW	RW	RW
Reset	0	0	0	0	0	0	0	0	0	0	0	0	0	0	0	0

Bit(s)	Name	Description
31:16	TARGET_BYTE_CNT	**The number of bytes to be transferred**
15:8	CURR_SEGMENT	**Indicates the current segment (0 to 255)**
7	SOURCE_ADDR_MODE	**Sets the source address mode** 0: Incremental mode 1: Fix mode
6	DEST_ADDR_MODE	**Sets the destination address mode** 0: Incremental mode 1: Fix mode
5:3	BURST_SIZE	**Sets the number of double words in each burst transaction** 0: 1 DW 1: 2 DWs 2: 4 DWs 3: 8 DWs 4: 16 DWs 5: Undefined 6: Undefined 7: Undefined
2	SEGMENT_DONE_INT_EN	**Enable the segment done interrupt. This interrupt asserts after transfer of each segment is done.** 0: Disable 1: Enable
1	CH_EN	**If CONT_MODE_EN=0, this bit is de-asserted by hardware after the number of bytes transfferred reaches the TARGET_BYTE_CNT** 0: Disable 1: Enable
0	SW_MODE_EN	**Software mode enable. If software mode enable is set, the data transfer starts when the CH_EN bit is set. Otherwise, the data transfer starts when the DMA request is asserted.** 0: Hardware mode 1: Software mode

MEDIATEK CONFIDENTIAL
FOR fairwanes@symnex.com.tw USE ONLY

This document contains information that is proprietary to MediaTek Inc.
Unauthorized reproduction or disclosure of this information in whole or in part is strictly prohibited.

1000282C **GDMA_CT1_2** **Control Register 1 of GDMA Channel 2** **00000000**

Bit	31	30	29	28	27	26	25	24	23	22	21	20	19	18	17	16
Name	RESERVED						NUM_SEGMENT				SOURCE_DMA_REQ					
Type	RO						RW				RW					
Reset	0	0	0	0	0	0	0	0	0	0	0	0	0	0	0	0
Bit	15	14	13	12	11	10	9	8	7	6	5	4	3	2	1	0
Name	RESERVED	CONT_MODE_EN	DEST_DMA_REQ						NEXT_CH2UNMASK					COHERENT_INT_EN	CH_UNMASK_FAIL_INT_EN	CH_MASK
Type	RO	RW	RW						RW					RW	RW	RW
Reset	0	0	0	0	0	0	0	0	0	0	0	0	0	0	0	0

Bit(s)	Name	Description
25:22	NUM_SEGMENT	**the number of segments=2N, where N is the value of this field. Valid values for this field are N=0 to 8. The segment size=(TARGET_BYTE_CNT/2N). It the TARGET_BYTE_CNT is not a multiple of 2N, the segment size = {(TARGET_BYTE_CNT/2N) + 1}.**
21:16	SOURCE_DMA_REQ	**Selects the source DMA request** 0: DMA_REQ0 1: DMA_REQ1 2: DMA_REQ2 32: The source of the transfer is memory (always ready)
14	CONT_MODE_EN	**If CONT_MODE_EN=1, HW will NOT clear CH_EN after the number of bytes transferred reachs TARGET_BYTE_CNT. Otherwise, HW will clear CH_EN will clear the CH_EN.** 0: Continuous mode is disabled 1: Continuous mode is enabled
13:8	DEST_DMA_REQ	**Selects the destination DMA request** 0: DMA_REQ0 1: DMA_REQ1 2: DMA_REQ2 32: The destination of the transfer is memory (always ready)
7:3	NEXT_CH2UNMASK	**Selects the channel to clear the CH_MASK bit. When the number of bytes transferred reaches the TARGET_BYTE_CNT, the hardware will clear the CH_MASK field of the NEXT_CH2UNMASK channel. If the hardware does not need to clear CH_MASK field of any channel, this field should be set to the channel itself.** 0: Channel 0 1: Channel 1 n: Channel n
2	COHERENT_INT_EN	**If COHERENT_INT_EN is set, GDMA will issue a dummy read to destination after the last write to destination to avoid data coherent problem. Note: DO NOT set this field if the destination is not MEM. (may corrupt data, if destination is a FIFO)** 0: Disable 1: Enable
1	CH_UNMASK_FAIL_INT_EN	**If this field is set, an interrupt will be assert when HW detect the CH_MASK field of NEXT_CH2UNMASK channel is 1'b0 while trying to clear it.** 0: Disable 1: Enable
0	CH_MASK	**When this field is set, the transfer of this channel is gated untill this**

MEDIATEK CONFIDENTIAL
FOR farrwang@ytex.com.tw USE ONLY

This document contains information that is proprietary to MediaTek Inc.
Unauthorized reproduction or disclosure of this information in whole or in part is strictly prohibited.

Bit(s)	Name	Description
		field is clear by HW/SW. 0: Channel is not masked 1: Channel is masked

10002830 **GDMA_SA_3** **Source Address of GDMA Channel 3** **00000000**

Bit	31	30	29	28	27	26	25	24	23	22	21	20	19	18	17	16
Name	SOURCE_ADDR[31:16]															
Type	RW															
Reset	0	0	0	0	0	0	0	0	0	0	0	0	0	0	0	0
Bit	15	14	13	12	11	10	9	8	7	6	5	4	3	2	1	0
Name	SOURCE_ADDR[15:0]															
Type	RW															
Reset	0	0	0	0	0	0	0	0	0	0	0	0	0	0	0	0

Bit(s)	Name	Description
31:0	SOURCE_ADDR	**Souce address**

10002834 **GDMA_DA_3** **Destination Address of GDMA Channel 3** **00000000**

Bit	31	30	29	28	27	26	25	24	23	22	21	20	19	18	17	16
Name	DEST_ADDR[31:16]															
Type	RW															
Reset	0	0	0	0	0	0	0	0	0	0	0	0	0	0	0	0
Bit	15	14	13	12	11	10	9	8	7	6	5	4	3	2	1	0
Name	DEST_ADDR[15:0]															
Type	RW															
Reset	0	0	0	0	0	0	0	0	0	0	0	0	0	0	0	0

Bit(s)	Name	Description
31:0	DEST_ADDR	**Destination address**

10002838 **GDMA_CT0_3** **Control Register 0 of GDMA Channel 3** **00000000**

Bit	31	30	29	28	27	26	25	24	23	22	21	20	19	18	17	16
Name	TARGET_BYTE_CNT															
Type	RW															
Reset	0	0	0	0	0	0	0	0	0	0	0	0	0	0	0	0
Bit	15	14	13	12	11	10	9	8	7	6	5	4	3	2	1	0
Name	CURR_SEGMENT								SOURCE_ADDR_MODE	DEST_ADDR_MODE	BURST_SIZE			SEGMENT_DONE_INT_EN	CH_EN	SW_MODE_EN
Type	RO								RW	RW	RW			RW	RW	RW
Reset	0	0	0	0	0	0	0	0	0	0	0	0	0	0	0	0

Bit(s)	Name	Description

MEDIATEK CONFIDENTIAL
FOR farrwang@synnex.com.tw USE ONLY

This document contains information that is proprietary to MediaTek Inc.
Unauthorized reproduction or disclosure of this information in whole or in part is strictly prohibited.

Bit(s)	Name	Description
31:16	TARGET_BYTE_CNT	**The number of bytes to be transferred**
15:8	CURR_SEGMENT	**Indicates the current segment (0 to 255)**
7	SOURCE_ADDR_MODE	**Sets the source address mode** 0: Incremental mode 1: Fix mode
6	DEST_ADDR_MODE	**Sets the destination address mode** 0: Incremental mode 1: Fix mode
5:3	BURST_SIZE	**Sets the number of double words in each burst transaction** 0: 1 DW 1: 2 DWs 2: 4 DWs 3: 8 DWs 4: 16 DWs 5: Undefined 6: Undefined 7: Undefined
2	SEGMENT_DONE_INT_EN	**Enable the segment done interrupt. This interrupt asserts after transfer of each segment is done.** 0: Disable 1: Enable
1	CH_EN	**If CONT_MODE_EN=0, this bit is de-asserted by hardware after the number of bytes transfferred reaches the TARGET_BYTE_CNT** 0: Disable 1: Enable
0	SW_MODE_EN	**Software mode enable. If software mode enable is set, the data transfer starts when the CH_EN bit is set. Otherwise, the data transfer starts when the DMA request is asserted.** 0: Hardware mode 1: Software mode

1000283C **GDMA_CT1_3** **Control Register 1 of GDMA Channel 3** **00000000**

Bit	31	30	29	28	27	26	25	24	23	22	21	20	19	18	17	16
Name	RESERVED						NUM_SEGMENT				SOURCE_DMA_REQ					
Type	RO						RW				RW					
Reset	0	0	0	0	0	0	0	0	0	0	0	0	0	0	0	0
Bit	15	14	13	12	11	10	9	8	7	6	5	4	3	2	1	0
Name	RESERVED	CONT_MODE_EN	DEST_DMA_REQ						NEXT_CH2UNMASK					COHERENT_INT_EN	CH_UNMASK_FAIL_INT_EN	CH_MASK
Type	RO	RW	RW						RW					RW	RW	RW
Reset	0	0	0	0	0	0	0	0	0	0	0	0	0	0	0	0

Bit(s)	Name	Description
25:22	NUM_SEGMENT	**the number of segments=2N, where N is the value of this field. Valid values for this field are N=0 to 8. The segment size=(TARGET_BYTE_CNT/2N). It the TARGET_BYTE_CNT is not a**

MEDIATEK CONFIDENTIAL
FOR tarwang@synnex.com.tw USE ONLY

This document contains information that is proprietary to MediaTek Inc.
Unauthorized reproduction or disclosure of this information in whole or in part is strictly prohibited.

Bit(s)	Name	Description
		multiple of 2N, the segment size = {(TARGET_BYTE_CNT/2N) + 1}.
21:16	SOURCE_DMA_REQ	**Selects the source DMA request** 0: DMA_REQ0 1: DMA_REQ1 2: DMA_REQ2 32: The source of the transfer is memory (always ready)
14	CONT_MODE_EN	**If CONT_MODE_EN=1, HW will NOT clear CH_EN after the number of bytes transferred reachs TARGET_BYTE_CNT. Otherwise, HW will clear CH_EN will clear the CH_EN.** 0: Continuous mode is disabled 1: Continuous mode is enabled
13:8	DEST_DMA_REQ	**Selects the destination DMA request** 0: DMA_REQ0 1: DMA_REQ1 2: DMA_REQ2 32: The destination of the transfer is memory (always ready)
7:3	NEXT_CH2UNMASK	**Selects the channel to clear the CH_MASK bit. When the number of bytes transferred reaches the TARGET_BYTE_CNT, the hardware will clear the CH_MASK field of the NEXT_CH2UNMASK channel. If the hardware does not need to clear CH_MASK field of any channel, this field should be set to the channel itself.** 0: Channel 0 1: Channel 1 n: Channel n
2	COHERENT_INT_EN	**If COHERENT_INT_EN is set, GDMA will issue a dummy read to destination after the last write to destination to avoid data coherent problem. Note: DO NOT set this field if the destination is not MEM. (may corrupt data, if destination is a FIFO)** 0: Disable 1: Enable
1	CH_UNMASK_FAIL_INT_EN	**If this field is set, an interrupt will be assert when HW detect the CH_MASK field of NEXT_CH2UNMASK channel is 1'b0 while trying to clear it.** 0: Disable 1: Enable
0	CH_MASK	**When this field is set, the transfer of this channel is gated untill this field is clear by HW/SW.** 0: Channel is not masked 1: Channel is masked

10002840 **GDMA_SA_4** **Source Address of GDMA Channel 4** **00000000**

Bit	31	30	29	28	27	26	25	24	23	22	21	20	19	18	17	16
Name	SOURCE_ADDR[31:16]															
Type	RW															
Reset	0	0	0	0	0	0	0	0	0	0	0	0	0	0	0	0
Bit	15	14	13	12	11	10	9	8	7	6	5	4	3	2	1	0
Name	SOURCE_ADDR[15:0]															
Type	RW															
Reset	0	0	0	0	0	0	0	0	0	0	0	0	0	0	0	0

Bit(s)	Name	Description
31:0	SOURCE_ADDR	**Souce address**

FOR MEDIATEK CONFIDENTIAL
fanwang@synnex.com INTERNAL USE ONLY

This document contains information that is proprietary to MediaTek Inc.
Unauthorized reproduction or disclosure of this information in whole or in part is strictly prohibited.

10002844 **GDMA_DA_4** **Destination Address of GDMA Channel 4** **00000000**

Bit	31	30	29	28	27	26	25	24	23	22	21	20	19	18	17	16
Name	DEST_ADDR[31:16]															
Type	RW															
Reset	0	0	0	0	0	0	0	0	0	0	0	0	0	0	0	0
Bit	15	14	13	12	11	10	9	8	7	6	5	4	3	2	1	0
Name	DEST_ADDR[15:0]															
Type	RW															
Reset	0	0	0	0	0	0	0	0	0	0	0	0	0	0	0	0

Bit(s)	Name	Description
31:0	DEST_ADDR	**Destination address**

10002848 **GDMA_CT0_4** **Control Register 0 of GDMA Channel 4** **00000000**

Bit	31	30	29	28	27	26	25	24	23	22	21	20	19	18	17	16
Name	TARGET_BYTE_CNT															
Type	RW															
Reset	0	0	0	0	0	0	0	0	0	0	0	0	0	0	0	0
Bit	15	14	13	12	11	10	9	8	7	6	5	4	3	2	1	0
Name	CURR_SEGMENT								SOURCE_ADDR_MODE	DEST_ADDR_MODE	BURST_SIZE			SEGMENT_DONE_INT_EN	CH_EN	SW_MODE_EN
Type	RO								RW	RW	RW			RW	RW	RW
Reset	0	0	0	0	0	0	0	0	0	0	0	0	0	0	0	0

Bit(s)	Name	Description
31:16	TARGET_BYTE_CNT	**The number of bytes to be transferred**
15:8	CURR_SEGMENT	**Indicates the current segment (0 to 255)**
7	SOURCE_ADDR_MODE	**Sets the source address mode** 0: Incremental mode 1: Fix mode
6	DEST_ADDR_MODE	**Sets the destination address mode** 0: Incremental mode 1: Fix mode
5:3	BURST_SIZE	**Sets the number of double words in each burst transaction** 0: 1 DW 1: 2 DWs 2: 4 DWs 3: 8 DWs 4: 16 DWs 5: Undefined 6: Undefined 7: Undefined
2	SEGMENT_DONE_INT_EN	**Enable the segment done interrupt. This interrupt asserts after transfer of each segment is done.** 0: Disable 1: Enable

MEDIATEK CONFIDENTIAL
FOR farrwang@synnex.com.tw USE ONLY

This document contains information that is proprietary to MediaTek Inc.
Unauthorized reproduction or disclosure of this information in whole or in part is strictly prohibited.

Bit(s)	Name	Description
1	CH_EN	**If CONT_MODE_EN=0, this bit is de-asserted by hardware after the number of bytes transfferred reaches the TARGET_BYTE_CNT** 0: Disable 1: Enable
0	SW_MODE_EN	**Software mode enable. If software mode enable is set, the data transfer starts when the CH_EN bit is set. Otherwise, the data transfer starts when the DMA request is asserted.** 0: Hardware mode 1: Software mode

1000284C **GDMA_CT1_4** **Control Register 1 of GDMA Channel 4** **00000000**

Bit	31	30	29	28	27	26	25	24	23	22	21	20	19	18	17	16
Name	RESERVED						NUM_SEGMENT				SOURCE_DMA_REQ					
Type	RO						RW				RW					
Reset	0	0	0	0	0	0	0	0	0	0	0	0	0	0	0	0
Bit	15	14	13	12	11	10	9	8	7	6	5	4	3	2	1	0
Name	RESERVED	CONT_MODE_EN	DEST_DMA_REQ						NEXT_CH2UNMASK					COHERENT_INT_EN	CH_UNMASK_FAIL_INT_EN	CH_MASK
Type	RO	RW	RW						RW					RW	RW	RW
Reset	0	0	0	0	0	0	0	0	0	0	0	0	0	0	0	0

Bit(s)	Name	Description
25:22	NUM_SEGMENT	**the number of segments=2N, where N is the value of this field. Valid values for this field are N=0 to 8. The segment size=(TARGET_BYTE_CNT/2N). It the TARGET_BYTE_CNT is not a multiple of 2N, the segment size = {(TARGET_BYTE_CNT/2N) + 1}.**
21:16	SOURCE_DMA_REQ	**Selects the source DMA request** 0: DMA_REQ0 1: DMA_REQ1 2: DMA_REQ2 32: The source of the transfer is memory (always ready)
14	CONT_MODE_EN	**If CONT_MODE_EN=1, HW will NOT clear CH_EN after the number of bytes transferred reachs TARGET_BYTE_CNT. Otherwise, HW will clear CH_EN will clear the CH_EN.** 0: Continuous mode is disabled 1: Continuous mode is enabled
13:8	DEST_DMA_REQ	**Selects the destination DMA request** 0: DMA_REQ0 1: DMA_REQ1 2: DMA_REQ2 32: The destination of the transfer is memory (always ready)
7:3	NEXT_CH2UNMASK	**Selects the channel to clear the CH_MASK bit. When the number of bytes transferred reaches the TARGET_BYTE_CNT, the hardware will clear the CH_MASK field of the NEXT_CH2UNMASK channel. If the hardware does not need to clear CH_MASK field of any channel, this field should be set to the channel itself.** 0: Channel 0 1: Channel 1

MEDIATEK CONFIDENTIAL
FOR fairwanes@annex.com.tw USE ONLY

This document contains information that is proprietary to MediaTek Inc.
Unauthorized reproduction or disclosure of this information in whole or in part is strictly prohibited.

Bit(s)	Name	Description
		n: Channel n
2	COHERENT_INT_EN	**If COHERENT_INT_EN is set, GDMA will issue a dummy read to destination after the last write to destination to avoid data coherent problem. Note: DO NOT set this field if the destination is not MEM. (may corrupt data, if destination is a FIFO)** 0: Disable 1: Enable
1	CH_UNMASK_FAIL_INT_EN	**If this field is set, an interrupt will be assert when HW detect the CH_MASK field of NEXT_CH2UNMASK channel is 1'b0 while trying to clear it.** 0: Disable 1: Enable
0	CH_MASK	**When this field is set, the transfer of this channel is gated untill this field is clear by HW/SW.** 0: Channel is not masked 1: Channel is masked

10002850 GDMA_SA_5 Source Address of GDMA Channel 5 00000000

Bit	31	30	29	28	27	26	25	24	23	22	21	20	19	18	17	16
Name	SOURCE_ADDR[31:16]															
Type	RW															
Reset	0	0	0	0	0	0	0	0	0	0	0	0	0	0	0	0
Bit	15	14	13	12	11	10	9	8	7	6	5	4	3	2	1	0
Name	SOURCE_ADDR[15:0]															
Type	RW															
Reset	0	0	0	0	0	0	0	0	0	0	0	0	0	0	0	0

Bit(s)	Name	Description
31:0	SOURCE_ADDR	**Souce address**

10002854 GDMA_DA_5 Destination Address of GDMA Channel 5 00000000

Bit	31	30	29	28	27	26	25	24	23	22	21	20	19	18	17	16
Name	DEST_ADDR[31:16]															
Type	RW															
Reset	0	0	0	0	0	0	0	0	0	0	0	0	0	0	0	0
Bit	15	14	13	12	11	10	9	8	7	6	5	4	3	2	1	0
Name	DEST_ADDR[15:0]															
Type	RW															
Reset	0	0	0	0	0	0	0	0	0	0	0	0	0	0	0	0

Bit(s)	Name	Description
31:0	DEST_ADDR	**Destination address**

10002858 GDMA_CT0_5 Control Register 0 of GDMA Channel 5 00000000

Bit	31	30	29	28	27	26	25	24	23	22	21	20	19	18	17	16
Name	TARGET_BYTE_CNT															
Type	RW															

MEDIATEK CONFIDENTIAL
FOR hardware@symnex.com.tw USE ONLY

This document contains information that is proprietary to MediaTek Inc.
Unauthorized reproduction or disclosure of this information in whole or in part is strictly prohibited.

Reset	0	0	0	0	0	0	0	0	0	0	0	0	0	0	0	0
Bit	15	14	13	12	11	10	9	8	7	6	5	4	3	2	1	0
Name	CURR_SEGMENT								SOURCE_ADDR_MODE	DEST_ADDR_MODE	BURST_SIZE			SEGMENT_DONE_INT_EN	CH_EN	SW_MODE_EN
Type	RO								RW	RW	RW			RW	RW	RW
Reset	0	0	0	0	0	0	0	0	0	0	0	0	0	0	0	0

Bit(s)	Name	Description
31:16	TARGET_BYTE_CNT	**The number of bytes to be transferred**
15:8	CURR_SEGMENT	**Indicates the current segment (0 to 255)**
7	SOURCE_ADDR_MODE	**Sets the source address mode** 0: Incremental mode 1: Fix mode
6	DEST_ADDR_MODE	**Sets the destination address mode** 0: Incremental mode 1: Fix mode
5:3	BURST_SIZE	**Sets the number of double words in each burst transaction** 0: 1 DW 1: 2 DWs 2: 4 DWs 3: 8 DWs 4: 16 DWs 5: Undefined 6: Undefined 7: Undefined
2	SEGMENT_DONE_INT_EN	**Enable the segment done interrupt. This interrupt asserts after transfer of each segment is done.** 0: Disable 1: Enable
1	CH_EN	**If CONT_MODE_EN=0, this bit is de-asserted by hardware after the number of bytes transfferred reaches the TARGET_BYTE_CNT** 0: Disable 1: Enable
0	SW_MODE_EN	**Software mode enable. If software mode enable is set, the data transfer starts when the CH_EN bit is set. Otherwise, the data transfer starts when the DMA request is asserted.** 0: Hardware mode 1: Software mode

1000285C **GDMA_CT1_5** **Control Register 1 of GDMA Channel 5** **00000000**

Bit	31	30	29	28	27	26	25	24	23	22	21	20	19	18	17	16
Name	RESERVED						NUM_SEGMENT				SOURCE_DMA_REQ					
Type	RO						RW				RW					
Reset	0	0	0	0	0	0	0	0	0	0	0	0	0	0	0	0
Bit	15	14	13	12	11	10	9	8	7	6	5	4	3	2	1	0
Name	RESERVED	CONT_MODE_	DEST_DMA_REQ						NEXT_CH2UNMASK					COHERENT_	CH_UNMASK	CH_MASK

FOR MEDIATEK CONFIDENTIAL
Yuan.yang@ymnex.com.tw USE ONLY

This document contains information that is proprietary to MediaTek Inc.
Unauthorized reproduction or disclosure of this information in whole or in part is strictly prohibited.

		EN												INT_EN	K_FAIL_INT_EN	
Type	RO	RW	RW						RW					RW	RW	RW
Reset	0	0	0	0	0	0	0	0	0	0	0	0	0	0	0	0

Bit(s)	Name	Description
25:22	NUM_SEGMENT	**the number of segments=2N, where N is the value of this field. Valid values for this field are N=0 to 8. The segment size=(TARGET_BYTE_CNT/2N). It the TARGET_BYTE_CNT is not a multiple of 2N, the segment size = {(TARGET_BYTE_CNT/2N) + 1}.**
21:16	SOURCE_DMA_REQ	**Selects the source DMA request** 0: DMA_REQ0 1: DMA_REQ1 2: DMA_REQ2 32: The source of the transfer is memory (always ready)
14	CONT_MODE_EN	**If CONT_MODE_EN=1, HW will NOT clear CH_EN after the number of bytes transferred reachs TARGET_BYTE_CNT. Otherwise, HW will clear CH_EN will clear the CH_EN.** 0: Continuous mode is disabled 1: Continuous mode is enabled
13:8	DEST_DMA_REQ	**Selects the destination DMA request** 0: DMA_REQ0 1: DMA_REQ1 2: DMA_REQ2 32: The destination of the transfer is memory (always ready)
7:3	NEXT_CH2UNMASK	**Selects the channel to clear the CH_MASK bit. When the number of bytes transferred reaches the TARGET_BYTE_CNT, the hardware will clear the CH_MASK field of the NEXT_CH2UNMASK channel. If the hardware does not need to clear CH_MASK field of any channel, this field should be set to the channel itself.** 0: Channel 0 1: Channel 1 n: Channel n
2	COHERENT_INT_EN	**If COHERENT_INT_EN is set, GDMA will issue a dummy read to destination after the last write to destination to avoid data coherent problem. Note: DO NOT set this field if the destination is not MEM. (may corrupt data, if destination is a FIFO)** 0: Disable 1: Enable
1	CH_UNMASK_FAIL_INT_EN	**If this field is set, an interrupt will be assert when HW detect the CH_MASK field of NEXT_CH2UNMASK channel is 1'b0 while trying to clear it.** 0: Disable 1: Enable
0	CH_MASK	**When this field is set, the transfer of this channel is gated untill this field is clear by HW/SW.** 0: Channel is not masked 1: Channel is masked

10002860 GDMA_SA_6 Source Address of GDMA Channel 6 00000000

Bit	31	30	29	28	27	26	25	24	23	22	21	20	19	18	17	16
Name	SOURCE_ADDR[31:16]															

This document contains information that is proprietary to MediaTek Inc.
Unauthorized reproduction or disclosure of this information in whole or in part is strictly prohibited.
MEDIATEK CONFIDENTIAL FOR farrwang@wynex.com.tw USE ONLY

Type	RW															
Reset	0	0	0	0	0	0	0	0	0	0	0	0	0	0	0	0
Bit	15	14	13	12	11	10	9	8	7	6	5	4	3	2	1	0
Name	**SOURCE_ADDR[15:0]**															
Type	RW															
Reset	0	0	0	0	0	0	0	0	0	0	0	0	0	0	0	0

Bit(s)	Name	Description
31:0	SOURCE_ADDR	**Souce address**

10002864 GDMA_DA_6 Destination Address of GDMA Channel 6 00000000

Bit	31	30	29	28	27	26	25	24	23	22	21	20	19	18	17	16
Name	**DEST_ADDR[31:16]**															
Type	RW															
Reset	0	0	0	0	0	0	0	0	0	0	0	0	0	0	0	0
Bit	15	14	13	12	11	10	9	8	7	6	5	4	3	2	1	0
Name	**DEST_ADDR[15:0]**															
Type	RW															
Reset	0	0	0	0	0	0	0	0	0	0	0	0	0	0	0	0

Bit(s)	Name	Description
31:0	DEST_ADDR	**Destination address**

10002868 GDMA_CT0_6 Control Register 0 of GDMA Channel 6 00000000

Bit	31	30	29	28	27	26	25	24	23	22	21	20	19	18	17	16
Name	**TARGET_BYTE_CNT**															
Type	RW															
Reset	0	0	0	0	0	0	0	0	0	0	0	0	0	0	0	0
Bit	15	14	13	12	11	10	9	8	7	6	5	4	3	2	1	0
Name	**CURR_SEGMENT**								**SOURCE_ADDR_MODE**	**DEST_ADDR_MODE**	**BURST_SIZE**			**SEGMENT_DONE_INT_EN**	**CH_EN**	**SW_MODE_EN**
Type	RO								RW	RW	RW			RW	RW	RW
Reset	0	0	0	0	0	0	0	0	0	0	0	0	0	0	0	0

Bit(s)	Name	Description
31:16	TARGET_BYTE_CNT	**The number of bytes to be transferred**
15:8	CURR_SEGMENT	**Indicates the current segment (0 to 255)**
7	SOURCE_ADDR_MODE	**Sets the source address mode** 0: Incremental mode 1: Fix mode
6	DEST_ADDR_MODE	**Sets the destination address mode** 0: Incremental mode 1: Fix mode
5:3	BURST_SIZE	**Sets the number of double words in each burst transaction** 0: 1 DW

MEDIATEK CONFIDENTIAL
FOR fariwang@sjmex.com.tw USE ONLY

This document contains information that is proprietary to MediaTek Inc.
Unauthorized reproduction or disclosure of this information in whole or in part is strictly prohibited.

Bit(s)	Name	Description
		1: 2 DWs 2: 4 DWs 3: 8 DWs 4: 16 DWs 5: Undefined 6: Undefined 7: Undefined
2	SEGMENT_DONE_INT_EN	**Enable the segment done interrupt. This interrupt asserts after transfer of each segment is done.** 0: Disable 1: Enable
1	CH_EN	**If CONT_MODE_EN=0, this bit is de-asserted by hardware after the number of bytes transfferred reaches the TARGET_BYTE_CNT** 0: Disable 1: Enable
0	SW_MODE_EN	**Software mode enable. If software mode enable is set, the data transfer starts when the CH_EN bit is set. Otherwise, the data transfer starts when the DMA request is asserted.** 0: Hardware mode 1: Software mode

1000286C **GDMA_CT1_6** **Control Register 1 of GDMA Channel 6** **00000000**

Bit	31	30	29	28	27	26	25	24	23	22	21	20	19	18	17	16
Name	RESERVED						NUM_SEGMENT				SOURCE_DMA_REQ					
Type	RO						RW				RW					
Reset	0	0	0	0	0	0	0	0	0	0	0	0	0	0	0	0
Bit	15	14	13	12	11	10	9	8	7	6	5	4	3	2	1	0
Name	RESERVED	CONT_MODE_EN	DEST_DMA_REQ						NEXT_CH2UNMASK					COHERENT_INT_EN	CH_UNMASK_FAIL_INT_EN	CH_MASK
Type	RO	RW	RW						RW					RW	RW	RW
Reset	0	0	0	0	0	0	0	0	0	0	0	0	0	0	0	0

Bit(s)	Name	Description
25:22	NUM_SEGMENT	**the number of segments=2N, where N is the value of this field. Valid values for this field are N=0 to 8. The segment size=(TARGET_BYTE_CNT/2N). It the TARGET_BYTE_CNT is not a multiple of 2N, the segment size = {(TARGET_BYTE_CNT/2N) + 1}.**
21:16	SOURCE_DMA_REQ	**Selects the source DMA request** 0: DMA_REQ0 1: DMA_REQ1 2: DMA_REQ2 32: The source of the transfer is memory (always ready)
14	CONT_MODE_EN	**If CONT_MODE_EN=1, HW will NOT clear CH_EN after the number of bytes transferred reachs TARGET_BYTE_CNT. Otherwise, HW will clear CH_EN will clear the CH_EN.** 0: Continuous mode is disabled 1: Continuous mode is enabled
13:8	DEST_DMA_REQ	**Selects the destination DMA request**

MEDIATEK CONFIDENTIAL
FOR farrwang@synnex.com.tw USE ONLY

This document contains information that is proprietary to MediaTek Inc.
Unauthorized reproduction or disclosure of this information in whole or in part is strictly prohibited.

Bit(s)	Name	Description
		0: DMA_REQ0 1: DMA_REQ1 2: DMA_REQ2 32: The destination of the transfer is memory (always ready)
7:3	NEXT_CH2UNMASK	**Selects the channel to clear the CH_MASK bit. When the number of bytes transferred reaches the TARGET_BYTE_CNT, the hardware will clear the CH_MASK field of the NEXT_CH2UNMASK channel. If the hardware does not need to clear CH_MASK field of any channel, this field should be set to the channel itself.** 0: Channel 0 1: Channel 1 n: Channel n
2	COHERENT_INT_EN	**If COHERENT_INT_EN is set, GDMA will issue a dummy read to destination after the last write to destination to avoid data coherent problem. Note: DO NOT set this field if the destination is not MEM. (may corrupt data, if destination is a FIFO)** 0: Disable 1: Enable
1	CH_UNMASK_FAIL_INT_EN	**If this field is set, an interrupt will be assert when HW detect the CH_MASK field of NEXT_CH2UNMASK channel is 1'b0 while trying to clear it.** 0: Disable 1: Enable
0	CH_MASK	**When this field is set, the transfer of this channel is gated untill this field is clear by HW/SW.** 0: Channel is not masked 1: Channel is masked

10002870 **GDMA_SA_7** **Source Address of GDMA Channel 7** **00000000**

Bit	31	30	29	28	27	26	25	24	23	22	21	20	19	18	17	16
Name	SOURCE_ADDR[31:16]															
Type	RW															
Reset	0	0	0	0	0	0	0	0	0	0	0	0	0	0	0	0
Bit	15	14	13	12	11	10	9	8	7	6	5	4	3	2	1	0
Name	SOURCE_ADDR[15:0]															
Type	RW															
Reset	0	0	0	0	0	0	0	0	0	0	0	0	0	0	0	0

Bit(s)	Name	Description
31:0	SOURCE_ADDR	**Souce address**

10002874 **GDMA_DA_7** **Destination Address of GDMA Channel 7** **00000000**

Bit	31	30	29	28	27	26	25	24	23	22	21	20	19	18	17	16
Name	DEST_ADDR[31:16]															
Type	RW															
Reset	0	0	0	0	0	0	0	0	0	0	0	0	0	0	0	0
Bit	15	14	13	12	11	10	9	8	7	6	5	4	3	2	1	0
Name	DEST_ADDR[15:0]															
Type	RW															
Reset	0	0	0	0	0	0	0	0	0	0	0	0	0	0	0	0

MEDIATEK CONFIDENTIAL
FOR farrwang@synnex.com.tw USE ONLY

This document contains information that is proprietary to MediaTek Inc.
Unauthorized reproduction or disclosure of this information in whole or in part is strictly prohibited.

Bit(s)	Name	Description
31:0	DEST_ADDR	**Destination address**

10002878 **GDMA_CT0_7** **Control Register 0 of GDMA Channel 7** **00000000**

Bit	31	30	29	28	27	26	25	24	23	22	21	20	19	18	17	16
Name	TARGET_BYTE_CNT															
Type	RW															
Reset	0	0	0	0	0	0	0	0	0	0	0	0	0	0	0	0
Bit	15	14	13	12	11	10	9	8	7	6	5	4	3	2	1	0
Name	CURR_SEGMENT								SOURCE_ADDR_MODE	DEST_ADDR_MODE	BURST_SIZE			SEGMENT_DONE_INT_EN	CH_EN	SW_MODE_EN
Type	RO								RW	RW	RW			RW	RW	RW
Reset	0	0	0	0	0	0	0	0	0	0	0	0	0	0	0	0

Bit(s)	Name	Description
31:16	TARGET_BYTE_CNT	**The number of bytes to be transferred**
15:8	CURR_SEGMENT	**Indicates the current segment (0 to 255)**
7	SOURCE_ADDR_MODE	**Sets the source address mode** 0: Incremental mode 1: Fix mode
6	DEST_ADDR_MODE	**Sets the destination address mode** 0: Incremental mode 1: Fix mode
5:3	BURST_SIZE	**Sets the number of double words in each burst transaction** 0: 1 DW 1: 2 DWs 2: 4 DWs 3: 8 DWs 4: 16 DWs 5: Undefined 6: Undefined 7: Undefined
2	SEGMENT_DONE_INT_EN	**Enable the segment done interrupt. This interrupt asserts after transfer of each segment is done.** 0: Disable 1: Enable
1	CH_EN	**If CONT_MODE_EN=0, this bit is de-asserted by hardware after the number of bytes transfferred reaches the TARGET_BYTE_CNT** 0: Disable 1: Enable
0	SW_MODE_EN	**Software mode enable. If software mode enable is set, the data transfer starts when the CH_EN bit is set. Otherwise, the data transfer starts when the DMA request is asserted.** 0: Hardware mode 1: Software mode

MEDIATEK CONFIDENTIAL
FOR fairwanes@symnex.com.tw USE ONLY

This document contains information that is proprietary to MediaTek Inc.
Unauthorized reproduction or disclosure of this information in whole or in part is strictly prohibited.

1000287C **GDMA_CT1_7** **Control Register 1 of GDMA Channel 7** **00000000**

Bit	31	30	29	28	27	26	25	24	23	22	21	20	19	18	17	16
Name	RESERVED						NUM_SEGMENT				SOURCE_DMA_REQ					
Type	RO						RW				RW					
Reset	0	0	0	0	0	0	0	0	0	0	0	0	0	0	0	0
Bit	15	14	13	12	11	10	9	8	7	6	5	4	3	2	1	0
Name	RESERVED	CONT_MODE_EN	DEST_DMA_REQ						NEXT_CH2UNMASK					COHERENT_INT_EN	CH_UNMASK_FAIL_INT_EN	CH_MASK
Type	RO	RW	RW						RW					RW	RW	RW
Reset	0	0	0	0	0	0	0	0	0	0	0	0	0	0	0	0

Bit(s)	Name	Description
25:22	NUM_SEGMENT	**the number of segments=2N, where N is the value of this field. Valid values for this field are N=0 to 8. The segment size=(TARGET_BYTE_CNT/2N). It the TARGET_BYTE_CNT is not a multiple of 2N, the segment size = {(TARGET_BYTE_CNT/2N) + 1}.**
21:16	SOURCE_DMA_REQ	**Selects the source DMA request** 0: DMA_REQ0 1: DMA_REQ1 2: DMA_REQ2 32: The source of the transfer is memory (always ready)
14	CONT_MODE_EN	**If CONT_MODE_EN=1, HW will NOT clear CH_EN after the number of bytes transferred reachs TARGET_BYTE_CNT. Otherwise, HW will clear CH_EN will clear the CH_EN.** 0: Continuous mode is disabled 1: Continuous mode is enabled
13:8	DEST_DMA_REQ	**Selects the destination DMA request** 0: DMA_REQ0 1: DMA_REQ1 2: DMA_REQ2 32: The destination of the transfer is memory (always ready)
7:3	NEXT_CH2UNMASK	**Selects the channel to clear the CH_MASK bit. When the number of bytes transferred reaches the TARGET_BYTE_CNT, the hardware will clear the CH_MASK field of the NEXT_CH2UNMASK channel. If the hardware does not need to clear CH_MASK field of any channel, this field should be set to the channel itself.** 0: Channel 0 1: Channel 1 n: Channel n
2	COHERENT_INT_EN	**If COHERENT_INT_EN is set, GDMA will issue a dummy read to destination after the last write to destination to avoid data coherent problem. Note: DO NOT set this field if the destination is not MEM. (may corrupt data, if destination is a FIFO)** 0: Disable 1: Enable
1	CH_UNMASK_FAIL_INT_EN	**If this field is set, an interrupt will be assert when HW detect the CH_MASK field of NEXT_CH2UNMASK channel is 1'b0 while trying to clear it.** 0: Disable 1: Enable
0	CH_MASK	**When this field is set, the transfer of this channel is gated untill this**

MEDIATEK CONFIDENTIAL
FOR farrwang@ytex.com.tw USE ONLY

This document contains information that is proprietary to MediaTek Inc.
Unauthorized reproduction or disclosure of this information in whole or in part is strictly prohibited.

Bit(s)	Name	Description
		field is clear by HW/SW. 0: Channel is not masked 1: Channel is masked

10002880 **GDMA_SA_8** **Source Address of GDMA Channel 8** **00000000**

Bit	31	30	29	28	27	26	25	24	23	22	21	20	19	18	17	16
Name	SOURCE_ADDR[31:16]															
Type	RW															
Reset	0	0	0	0	0	0	0	0	0	0	0	0	0	0	0	0
Bit	15	14	13	12	11	10	9	8	7	6	5	4	3	2	1	0
Name	SOURCE_ADDR[15:0]															
Type	RW															
Reset	0	0	0	0	0	0	0	0	0	0	0	0	0	0	0	0

Bit(s)	Name	Description
31:0	SOURCE_ADDR	**Souce address**

10002884 **GDMA_DA_8** **Destination Address of GDMA Channel 8** **00000000**

Bit	31	30	29	28	27	26	25	24	23	22	21	20	19	18	17	16
Name	DEST_ADDR[31:16]															
Type	RW															
Reset	0	0	0	0	0	0	0	0	0	0	0	0	0	0	0	0
Bit	15	14	13	12	11	10	9	8	7	6	5	4	3	2	1	0
Name	DEST_ADDR[15:0]															
Type	RW															
Reset	0	0	0	0	0	0	0	0	0	0	0	0	0	0	0	0

Bit(s)	Name	Description
31:0	DEST_ADDR	**Destination address**

10002888 **GDMA_CT0_8** **Control Register 0 of GDMA Channel 8** **00000000**

Bit	31	30	29	28	27	26	25	24	23	22	21	20	19	18	17	16
Name	TARGET_BYTE_CNT															
Type	RW															
Reset	0	0	0	0	0	0	0	0	0	0	0	0	0	0	0	0
Bit	15	14	13	12	11	10	9	8	7	6	5	4	3	2	1	0
Name	CURR_SEGMENT								SOURCE_ADDR_MODE	DEST_ADDR_MODE	BURST_SIZE			SEGMENT_DONE_INT_EN	CH_EN	SW_MODE_EN
Type	RO								RW	RW	RW			RW	RW	RW
Reset	0	0	0	0	0	0	0	0	0	0	0	0	0	0	0	0

Bit(s)	Name	Description

MEDIATEK CONFIDENTIAL
FOR farrwang@synnex.com.tw USE ONLY

This document contains information that is proprietary to MediaTek Inc.
Unauthorized reproduction or disclosure of this information in whole or in part is strictly prohibited.

Bit(s)	Name	Description
31:16	TARGET_BYTE_CNT	**The number of bytes to be transferred**
15:8	CURR_SEGMENT	**Indicates the current segment (0 to 255)**
7	SOURCE_ADDR_MODE	**Sets the source address mode** 0: Incremental mode 1: Fix mode
6	DEST_ADDR_MODE	**Sets the destination address mode** 0: Incremental mode 1: Fix mode
5:3	BURST_SIZE	**Sets the number of double words in each burst transaction** 0: 1 DW 1: 2 DWs 2: 4 DWs 3: 8 DWs 4: 16 DWs 5: Undefined 6: Undefined 7: Undefined
2	SEGMENT_DONE_INT_EN	**Enable the segment done interrupt. This interrupt asserts after transfer of each segment is done.** 0: Disable 1: Enable
1	CH_EN	**If CONT_MODE_EN=0, this bit is de-asserted by hardware after the number of bytes transfferred reaches the TARGET_BYTE_CNT** 0: Disable 1: Enable
0	SW_MODE_EN	**Software mode enable. If software mode enable is set, the data transfer starts when the CH_EN bit is set. Otherwise, the data transfer starts when the DMA request is asserted.** 0: Hardware mode 1: Software mode

1000288C **GDMA_CT1_8** **Control Register 1 of GDMA Channel 8** **00000000**

Bit	31	30	29	28	27	26	25	24	23	22	21	20	19	18	17	16
Name	RESERVED						NUM_SEGMENT				SOURCE_DMA_REQ					
Type	RO						RW				RW					
Reset	0	0	0	0	0	0	0	0	0	0	0	0	0	0	0	0
Bit	15	14	13	12	11	10	9	8	7	6	5	4	3	2	1	0
Name	RESERVED	CONT_MODE_EN	DEST_DMA_REQ						NEXT_CH2UNMASK					COHERENT_INT_EN	CH_UNMASK_FAIL_INT_EN	CH_MASK
Type	RO	RW	RW						RW					RW	RW	RW
Reset	0	0	0	0	0	0	0	0	0	0	0	0	0	0	0	0

Bit(s)	Name	Description
25:22	NUM_SEGMENT	**the number of segments=2N, where N is the value of this field. Valid values for this field are N=0 to 8. The segment size=(TARGET_BYTE_CNT/2N). It the TARGET_BYTE_CNT is not a**

MEDIATEK CONFIDENTIAL
FOR tarwang@synnex.com.tw USE ONLY

This document contains information that is proprietary to MediaTek Inc.
Unauthorized reproduction or disclosure of this information in whole or in part is strictly prohibited.

Bit(s)	Name	Description
		multiple of 2N, the segment size = {(TARGET_BYTE_CNT/2N) + 1}.
21:16	SOURCE_DMA_REQ	**Selects the source DMA request** 0: DMA_REQ0 1: DMA_REQ1 2: DMA_REQ2 32: The source of the transfer is memory (always ready)
14	CONT_MODE_EN	**If CONT_MODE_EN=1, HW will NOT clear CH_EN after the number of bytes transferred reachs TARGET_BYTE_CNT. Otherwise, HW will clear CH_EN will clear the CH_EN.** 0: Continuous mode is disabled 1: Continuous mode is enabled
13:8	DEST_DMA_REQ	**Selects the destination DMA request** 0: DMA_REQ0 1: DMA_REQ1 2: DMA_REQ2 32: The destination of the transfer is memory (always ready)
7:3	NEXT_CH2UNMASK	**Selects the channel to clear the CH_MASK bit. When the number of bytes transferred reaches the TARGET_BYTE_CNT, the hardware will clear the CH_MASK field of the NEXT_CH2UNMASK channel. If the hardware does not need to clear CH_MASK field of any channel, this field should be set to the channel itself.** 0: Channel 0 1: Channel 1 n: Channel n
2	COHERENT_INT_EN	**If COHERENT_INT_EN is set, GDMA will issue a dummy read to destination after the last write to destination to avoid data coherent problem. Note: DO NOT set this field if the destination is not MEM. (may corrupt data, if destination is a FIFO)** 0: Disable 1: Enable
1	CH_UNMASK_FAIL_INT_EN	**If this field is set, an interrupt will be assert when HW detect the CH_MASK field of NEXT_CH2UNMASK channel is 1'b0 while trying to clear it.** 0: Disable 1: Enable
0	CH_MASK	**When this field is set, the transfer of this channel is gated untill this field is clear by HW/SW.** 0: Channel is not masked 1: Channel is masked

10002890 **GDMA_SA_9** **Source Address of GDMA Channel 9** **00000000**

Bit	31	30	29	28	27	26	25	24	23	22	21	20	19	18	17	16
Name	SOURCE_ADDR[31:16]															
Type	RW															
Reset	0	0	0	0	0	0	0	0	0	0	0	0	0	0	0	0
Bit	15	14	13	12	11	10	9	8	7	6	5	4	3	2	1	0
Name	SOURCE_ADDR[15:0]															
Type	RW															
Reset	0	0	0	0	0	0	0	0	0	0	0	0	0	0	0	0

Bit(s)	Name	Description
31:0	SOURCE_ADDR	**Souce address**

FOR MEDIATEK CONFIDENTIAL
fanwang@synnex.com INTERNAL USE ONLY

This document contains information that is proprietary to MediaTek Inc.
Unauthorized reproduction or disclosure of this information in whole or in part is strictly prohibited.

10002894 **GDMA_DA_9** **Destination Address of GDMA Channel 9** **00000000**

Bit	31	30	29	28	27	26	25	24	23	22	21	20	19	18	17	16
Name	DEST_ADDR[31:16]															
Type	RW															
Reset	0	0	0	0	0	0	0	0	0	0	0	0	0	0	0	0
Bit	15	14	13	12	11	10	9	8	7	6	5	4	3	2	1	0
Name	DEST_ADDR[15:0]															
Type	RW															
Reset	0	0	0	0	0	0	0	0	0	0	0	0	0	0	0	0

Bit(s)	Name	Description
31:0	DEST_ADDR	**Destination address**

10002898 **GDMA_CT0_9** **Control Register 0 of GDMA Channel 9** **00000000**

Bit	31	30	29	28	27	26	25	24	23	22	21	20	19	18	17	16
Name	TARGET_BYTE_CNT															
Type	RW															
Reset	0	0	0	0	0	0	0	0	0	0	0	0	0	0	0	0
Bit	15	14	13	12	11	10	9	8	7	6	5	4	3	2	1	0
Name	CURR_SEGMENT								SOURCE_ADDR_MODE	DEST_ADDR_MODE	BURST_SIZE			SEGMENT_DONE_INT_EN	CH_EN	SW_MODE_EN
Type	RO								RW	RW	RW			RW	RW	RW
Reset	0	0	0	0	0	0	0	0	0	0	0	0	0	0	0	0

Bit(s)	Name	Description
31:16	TARGET_BYTE_CNT	**The number of bytes to be transferred**
15:8	CURR_SEGMENT	**Indicates the current segment (0 to 255)**
7	SOURCE_ADDR_MODE	**Sets the source address mode** 0: Incremental mode 1: Fix mode
6	DEST_ADDR_MODE	**Sets the destination address mode** 0: Incremental mode 1: Fix mode
5:3	BURST_SIZE	**Sets the number of double words in each burst transaction** 0: 1 DW 1: 2 DWs 2: 4 DWs 3: 8 DWs 4: 16 DWs 5: Undefined 6: Undefined 7: Undefined
2	SEGMENT_DONE_INT_EN	**Enable the segment done interrupt. This interrupt asserts after transfer of each segment is done.** 0: Disable 1: Enable

MEDIATEK CONFIDENTIAL
FOR farrwang@synnex.com.tw USE ONLY

This document contains information that is proprietary to MediaTek Inc.
Unauthorized reproduction or disclosure of this information in whole or in part is strictly prohibited.

Bit(s)	Name	Description
1	CH_EN	**If CONT_MODE_EN=0, this bit is de-asserted by hardware after the number of bytes transfferred reaches the TARGET_BYTE_CNT** 0: Disable 1: Enable
0	SW_MODE_EN	**Software mode enable. If software mode enable is set, the data transfer starts when the CH_EN bit is set. Otherwise, the data transfer starts when the DMA request is asserted.** 0: Hardware mode 1: Software mode

1000289C **GDMA_CT1_9** **Control Register 1 of GDMA Channel 9** **00000000**

Bit	31	30	29	28	27	26	25	24	23	22	21	20	19	18	17	16
Name	RESERVED						NUM_SEGMENT				SOURCE_DMA_REQ					
Type	RO						RW				RW					
Reset	0	0	0	0	0	0	0	0	0	0	0	0	0	0	0	0
Bit	15	14	13	12	11	10	9	8	7	6	5	4	3	2	1	0
Name	RESERVED	CONT_MODE_EN	DEST_DMA_REQ						NEXT_CH2UNMASK					COHERENT_INT_EN	CH_UNMASK_FAIL_INT_EN	CH_MASK
Type	RO	RW	RW						RW					RW	RW	RW
Reset	0	0	0	0	0	0	0	0	0	0	0	0	0	0	0	0

Bit(s)	Name	Description
25:22	NUM_SEGMENT	**the number of segments=2N, where N is the value of this field. Valid values for this field are N=0 to 8. The segment size=(TARGET_BYTE_CNT/2N). It the TARGET_BYTE_CNT is not a multiple of 2N, the segment size = {(TARGET_BYTE_CNT/2N) + 1}.**
21:16	SOURCE_DMA_REQ	**Selects the source DMA request** 0: DMA_REQ0 1: DMA_REQ1 2: DMA_REQ2 32: The source of the transfer is memory (always ready)
14	CONT_MODE_EN	**If CONT_MODE_EN=1, HW will NOT clear CH_EN after the number of bytes transferred reachs TARGET_BYTE_CNT. Otherwise, HW will clear CH_EN will clear the CH_EN.** 0: Continuous mode is disabled 1: Continuous mode is enabled
13:8	DEST_DMA_REQ	**Selects the destination DMA request** 0: DMA_REQ0 1: DMA_REQ1 2: DMA_REQ2 32: The destination of the transfer is memory (always ready)
7:3	NEXT_CH2UNMASK	**Selects the channel to clear the CH_MASK bit. When the number of bytes transferred reaches the TARGET_BYTE_CNT, the hardware will clear the CH_MASK field of the NEXT_CH2UNMASK channel. If the hardware does not need to clear CH_MASK field of any channel, this field should be set to the channel itself.** 0: Channel 0 1: Channel 1

MEDIATEK CONFIDENTIAL
FOR fairwanes@annex.com.tw USE ONLY

This document contains information that is proprietary to MediaTek Inc.
Unauthorized reproduction or disclosure of this information in whole or in part is strictly prohibited.

Bit(s)	Name	Description
		n: Channel n
2	COHERENT_INT_EN	**If COHERENT_INT_EN is set, GDMA will issue a dummy read to destination after the last write to destination to avoid data coherent problem. Note: DO NOT set this field if the destination is not MEM. (may corrupt data, if destination is a FIFO)** 0: Disable 1: Enable
1	CH_UNMASK_FAIL_INT_EN	**If this field is set, an interrupt will be assert when HW detect the CH_MASK field of NEXT_CH2UNMASK channel is 1'b0 while trying to clear it.** 0: Disable 1: Enable
0	CH_MASK	**When this field is set, the transfer of this channel is gated untill this field is clear by HW/SW.** 0: Channel is not masked 1: Channel is masked

100028A0 GDMA_SA_10 Source Address of GDMA Channel 10 00000000

Bit	31	30	29	28	27	26	25	24	23	22	21	20	19	18	17	16
Name	SOURCE_ADDR[31:16]															
Type	RW															
Reset	0	0	0	0	0	0	0	0	0	0	0	0	0	0	0	0
Bit	15	14	13	12	11	10	9	8	7	6	5	4	3	2	1	0
Name	SOURCE_ADDR[15:0]															
Type	RW															
Reset	0	0	0	0	0	0	0	0	0	0	0	0	0	0	0	0

Bit(s)	Name	Description
31:0	SOURCE_ADDR	**Souce address**

100028A4 GDMA_DA_10 Destination Address of GDMA Channel 10 00000000

Bit	31	30	29	28	27	26	25	24	23	22	21	20	19	18	17	16
Name	DEST_ADDR[31:16]															
Type	RW															
Reset	0	0	0	0	0	0	0	0	0	0	0	0	0	0	0	0
Bit	15	14	13	12	11	10	9	8	7	6	5	4	3	2	1	0
Name	DEST_ADDR[15:0]															
Type	RW															
Reset	0	0	0	0	0	0	0	0	0	0	0	0	0	0	0	0

Bit(s)	Name	Description
31:0	DEST_ADDR	**Destination address**

100028A8 GDMA_CT0_10 Control Register 0 of GDMA Channel 10 00000000

Bit	31	30	29	28	27	26	25	24	23	22	21	20	19	18	17	16
Name	TARGET_BYTE_CNT															
Type	RW															

MEDIATEK CONFIDENTIAL
FOR forwarm@symnex.com.tw USE ONLY

This document contains information that is proprietary to MediaTek Inc.
Unauthorized reproduction or disclosure of this information in whole or in part is strictly prohibited.

Reset	0	0	0	0	0	0	0	0	0	0	0	0	0	0	0	0
Bit	15	14	13	12	11	10	9	8	7	6	5	4	3	2	1	0
Name	CURR_SEGMENT								SOURCE_ADDR_MODE	DEST_ADDR_MODE	BURST_SIZE			SEGMENT_DONE_INT_EN	CH_EN	SW_MODE_EN
Type	RO								RW	RW	RW			RW	RW	RW
Reset	0	0	0	0	0	0	0	0	0	0	0	0	0	0	0	0

Bit(s)	Name	Description
31:16	TARGET_BYTE_CNT	**The number of bytes to be transferred**
15:8	CURR_SEGMENT	**Indicates the current segment (0 to 255)**
7	SOURCE_ADDR_MODE	**Sets the source address mode** 0: Incremental mode 1: Fix mode
6	DEST_ADDR_MODE	**Sets the destination address mode** 0: Incremental mode 1: Fix mode
5:3	BURST_SIZE	**Sets the number of double words in each burst transaction** 0: 1 DW 1: 2 DWs 2: 4 DWs 3: 8 DWs 4: 16 DWs 5: Undefined 6: Undefined 7: Undefined
2	SEGMENT_DONE_INT_EN	**Enable the segment done interrupt. This interrupt asserts after transfer of each segment is done.** 0: Disable 1: Enable
1	CH_EN	**If CONT_MODE_EN=0, this bit is de-asserted by hardware after the number of bytes transfferred reaches the TARGET_BYTE_CNT** 0: Disable 1: Enable
0	SW_MODE_EN	**Software mode enable. If software mode enable is set, the data transfer starts when the CH_EN bit is set. Otherwise, the data transfer starts when the DMA request is asserted.** 0: Hardware mode 1: Software mode

100028AC **GDMA_CT1_10** **Control Register 1 of GDMA Channel 10** **00000000**

Bit	31	30	29	28	27	26	25	24	23	22	21	20	19	18	17	16
Name	RESERVED						NUM_SEGMENT				SOURCE_DMA_REQ					
Type	RO						RW				RW					
Reset	0	0	0	0	0	0	0	0	0	0	0	0	0	0	0	0
Bit	15	14	13	12	11	10	9	8	7	6	5	4	3	2	1	0
Name	RESERVED	CONT_MODE_	DEST_DMA_REQ						NEXT_CH2UNMASK					COHERENT_	CH_UNMASK	CH_MASK

FOR MEDIATEK CONFIDENTIAL
Ref.wang@ynex.com.tw USE ONLY

This document contains information that is proprietary to MediaTek Inc.
Unauthorized reproduction or disclosure of this information in whole or in part is strictly prohibited.

		EN												INT_EN	K_FAIL_INT_EN	
Type	RO	RW	RW						RW					RW	RW	RW
Reset	0	0	0	0	0	0	0	0	0	0	0	0	0	0	0	0

Bit(s)	Name	Description
25:22	NUM_SEGMENT	**the number of segments=2N, where N is the value of this field. Valid values for this field are N=0 to 8. The segment size=(TARGET_BYTE_CNT/2N). It the TARGET_BYTE_CNT is not a multiple of 2N, the segment size = {(TARGET_BYTE_CNT/2N) + 1}.**
21:16	SOURCE_DMA_REQ	**Selects the source DMA request** 0: DMA_REQ0 1: DMA_REQ1 2: DMA_REQ2 32: The source of the transfer is memory (always ready)
14	CONT_MODE_EN	**If CONT_MODE_EN=1, HW will NOT clear CH_EN after the number of bytes transferred reachs TARGET_BYTE_CNT. Otherwise, HW will clear CH_EN will clear the CH_EN.** 0: Continuous mode is disabled 1: Continuous mode is enabled
13:8	DEST_DMA_REQ	**Selects the destination DMA request** 0: DMA_REQ0 1: DMA_REQ1 2: DMA_REQ2 32: The destination of the transfer is memory (always ready)
7:3	NEXT_CH2UNMASK	**Selects the channel to clear the CH_MASK bit. When the number of bytes transferred reaches the TARGET_BYTE_CNT, the hardware will clear the CH_MASK field of the NEXT_CH2UNMASK channel. If the hardware does not need to clear CH_MASK field of any channel, this field should be set to the channel itself.** 0: Channel 0 1: Channel 1 n: Channel n
2	COHERENT_INT_EN	**If COHERENT_INT_EN is set, GDMA will issue a dummy read to destination after the last write to destination to avoid data coherent problem. Note: DO NOT set this field if the destination is not MEM. (may corrupt data, if destination is a FIFO)** 0: Disable 1: Enable
1	CH_UNMASK_FAIL_INT_EN	**If this field is set, an interrupt will be assert when HW detect the CH_MASK field of NEXT_CH2UNMASK channel is 1'b0 while trying to clear it.** 0: Disable 1: Enable
0	CH_MASK	**When this field is set, the transfer of this channel is gated untill this field is clear by HW/SW.** 0: Channel is not masked 1: Channel is masked

100028B0 GDMA_SA_11 Source Address of GDMA Channel 11 00000000

Bit	31	30	29	28	27	26	25	24	23	22	21	20	19	18	17	16
Name	SOURCE_ADDR[31:16]															

This document contains information that is proprietary to MediaTek Inc.
Unauthorized reproduction or disclosure of this information in whole or in part is strictly prohibited.
MEDIATEK CONFIDENTIAL FOR tarrwang@wynex.com.tw USE ONLY

Type	RW															
Reset	0	0	0	0	0	0	0	0	0	0	0	0	0	0	0	0
Bit	15	14	13	12	11	10	9	8	7	6	5	4	3	2	1	0
Name	SOURCE_ADDR[15:0]															
Type	RW															
Reset	0	0	0	0	0	0	0	0	0	0	0	0	0	0	0	0

Bit(s)	Name	Description
31:0	SOURCE_ADDR	**Souce address**

100028B4 GDMA_DA_11 Destination Address of GDMA Channel 11 00000000

Bit	31	30	29	28	27	26	25	24	23	22	21	20	19	18	17	16
Name	DEST_ADDR[31:16]															
Type	RW															
Reset	0	0	0	0	0	0	0	0	0	0	0	0	0	0	0	0
Bit	15	14	13	12	11	10	9	8	7	6	5	4	3	2	1	0
Name	DEST_ADDR[15:0]															
Type	RW															
Reset	0	0	0	0	0	0	0	0	0	0	0	0	0	0	0	0

Bit(s)	Name	Description
31:0	DEST_ADDR	**Destination address**

100028B8 GDMA_CT0_11 Control Register 0 of GDMA Channel 11 00000000

Bit	31	30	29	28	27	26	25	24	23	22	21	20	19	18	17	16
Name	TARGET_BYTE_CNT															
Type	RW															
Reset	0	0	0	0	0	0	0	0	0	0	0	0	0	0	0	0
Bit	15	14	13	12	11	10	9	8	7	6	5	4	3	2	1	0
Name	CURR_SEGMENT								SOURCE_ADDR_MODE	DEST_ADDR_MODE	BURST_SIZE			SEGMENT_DONE_INT_EN	CH_EN	SW_MODE_EN
Type	RO								RW	RW	RW			RW	RW	RW
Reset	0	0	0	0	0	0	0	0	0	0	0	0	0	0	0	0

Bit(s)	Name	Description
31:16	TARGET_BYTE_CNT	**The number of bytes to be transferred**
15:8	CURR_SEGMENT	**Indicates the current segment (0 to 255)**
7	SOURCE_ADDR_MODE	**Sets the source address mode** 0: Incremental mode 1: Fix mode
6	DEST_ADDR_MODE	**Sets the destination address mode** 0: Incremental mode 1: Fix mode
5:3	BURST_SIZE	**Sets the number of double words in each burst transaction** 0: 1 DW

MEDIATEK CONFIDENTIAL
FOR fariwang@ symnex.com.tw USE ONLY

This document contains information that is proprietary to MediaTek Inc.
Unauthorized reproduction or disclosure of this information in whole or in part is strictly prohibited.

Bit(s)	Name	Description
		1: 2 DWs 2: 4 DWs 3: 8 DWs 4: 16 DWs 5: Undefined 6: Undefined 7: Undefined
2	SEGMENT_DONE_INT_EN	**Enable the segment done interrupt. This interrupt asserts after transfer of each segment is done.** 0: Disable 1: Enable
1	CH_EN	**If CONT_MODE_EN=0, this bit is de-asserted by hardware after the number of bytes transfferred reaches the TARGET_BYTE_CNT** 0: Disable 1: Enable
0	SW_MODE_EN	**Software mode enable. If software mode enable is set, the data transfer starts when the CH_EN bit is set. Otherwise, the data transfer starts when the DMA request is asserted.** 0: Hardware mode 1: Software mode

100028BC **GDMA_CT1_11** **Control Register 1 of GDMA Channel 11** **00000000**

Bit	31	30	29	28	27	26	25	24	23	22	21	20	19	18	17	16
Name	RESERVED						NUM_SEGMENT				SOURCE_DMA_REQ					
Type	RO						RW				RW					
Reset	0	0	0	0	0	0	0	0	0	0	0	0	0	0	0	0
Bit	15	14	13	12	11	10	9	8	7	6	5	4	3	2	1	0
Name	RESERVED	CONT_MODE_EN	DEST_DMA_REQ						NEXT_CH2UNMASK					COHERENT_INT_EN	CH_UNMASK_FAIL_INT_EN	CH_MASK
Type	RO	RW	RW						RW					RW	RW	RW
Reset	0	0	0	0	0	0	0	0	0	0	0	0	0	0	0	0

Bit(s)	Name	Description
25:22	NUM_SEGMENT	**the number of segments=2N, where N is the value of this field. Valid values for this field are N=0 to 8. The segment size=(TARGET_BYTE_CNT/2N). It the TARGET_BYTE_CNT is not a multiple of 2N, the segment size = {(TARGET_BYTE_CNT/2N) + 1}.**
21:16	SOURCE_DMA_REQ	**Selects the source DMA request** 0: DMA_REQ0 1: DMA_REQ1 2: DMA_REQ2 32: The source of the transfer is memory (always ready)
14	CONT_MODE_EN	**If CONT_MODE_EN=1, HW will NOT clear CH_EN after the number of bytes transferred reachs TARGET_BYTE_CNT. Otherwise, HW will clear CH_EN will clear the CH_EN.** 0: Continuous mode is disabled 1: Continuous mode is enabled
13:8	DEST_DMA_REQ	**Selects the destination DMA request**

MEDIATEK CONFIDENTIAL
FOR farrwang@synnex.com.tw USE ONLY

This document contains information that is proprietary to MediaTek Inc.
Unauthorized reproduction or disclosure of this information in whole or in part is strictly prohibited.

Bit(s)	Name	Description
		0: DMA_REQ0 1: DMA_REQ1 2: DMA_REQ2 32: The destination of the transfer is memory (always ready)
7:3	NEXT_CH2UNMASK	**Selects the channel to clear the CH_MASK bit. When the number of bytes transferred reaches the TARGET_BYTE_CNT, the hardware will clear the CH_MASK field of the NEXT_CH2UNMASK channel. If the hardware does not need to clear CH_MASK field of any channel, this field should be set to the channel itself.** 0: Channel 0 1: Channel 1 n: Channel n
2	COHERENT_INT_EN	**If COHERENT_INT_EN is set, GDMA will issue a dummy read to destination after the last write to destination to avoid data coherent problem. Note: DO NOT set this field if the destination is not MEM. (may corrupt data, if destination is a FIFO)** 0: Disable 1: Enable
1	CH_UNMASK_FAIL_INT_EN	**If this field is set, an interrupt will be assert when HW detect the CH_MASK field of NEXT_CH2UNMASK channel is 1'b0 while trying to clear it.** 0: Disable 1: Enable
0	CH_MASK	**When this field is set, the transfer of this channel is gated untill this field is clear by HW/SW.** 0: Channel is not masked 1: Channel is masked

100028C0 GDMA_SA_12 Source Address of GDMA Channel 12 **00000000**

Bit	31	30	29	28	27	26	25	24	23	22	21	20	19	18	17	16
Name	SOURCE_ADDR[31:16]															
Type	RW															
Reset	0	0	0	0	0	0	0	0	0	0	0	0	0	0	0	0
Bit	15	14	13	12	11	10	9	8	7	6	5	4	3	2	1	0
Name	SOURCE_ADDR[15:0]															
Type	RW															
Reset	0	0	0	0	0	0	0	0	0	0	0	0	0	0	0	0

Bit(s)	Name	Description
31:0	SOURCE_ADDR	**Souce address**

100028C4 GDMA_DA_12 Destination Address of GDMA Channel 12 **00000000**

Bit	31	30	29	28	27	26	25	24	23	22	21	20	19	18	17	16
Name	DEST_ADDR[31:16]															
Type	RW															
Reset	0	0	0	0	0	0	0	0	0	0	0	0	0	0	0	0
Bit	15	14	13	12	11	10	9	8	7	6	5	4	3	2	1	0
Name	DEST_ADDR[15:0]															
Type	RW															
Reset	0	0	0	0	0	0	0	0	0	0	0	0	0	0	0	0

MEDIATEK CONFIDENTIAL
FOR farrwang@synnex.com.tw USE ONLY

This document contains information that is proprietary to MediaTek Inc.
Unauthorized reproduction or disclosure of this information in whole or in part is strictly prohibited.

Bit(s)	Name	Description
31:0	DEST_ADDR	**Destination address**

100028C8 **GDMA_CT0_12** **Control Register 0 of GDMA Channel 12** **00000000**

Bit	31	30	29	28	27	26	25	24	23	22	21	20	19	18	17	16
Name	TARGET_BYTE_CNT															
Type	RW															
Reset	0	0	0	0	0	0	0	0	0	0	0	0	0	0	0	0
Bit	15	14	13	12	11	10	9	8	7	6	5	4	3	2	1	0
Name	CURR_SEGMENT								SOURCE_ADDR_MODE	DEST_ADDR_MODE	BURST_SIZE			SEGMENT_DONE_INT_EN	CH_EN	SW_MODE_EN
Type	RO								RW	RW	RW			RW	RW	RW
Reset	0	0	0	0	0	0	0	0	0	0	0	0	0	0	0	0

Bit(s)	Name	Description
31:16	TARGET_BYTE_CNT	**The number of bytes to be transferred**
15:8	CURR_SEGMENT	**Indicates the current segment (0 to 255)**
7	SOURCE_ADDR_MODE	**Sets the source address mode** 0: Incremental mode 1: Fix mode
6	DEST_ADDR_MODE	**Sets the destination address mode** 0: Incremental mode 1: Fix mode
5:3	BURST_SIZE	**Sets the number of double words in each burst transaction** 0: 1 DW 1: 2 DWs 2: 4 DWs 3: 8 DWs 4: 16 DWs 5: Undefined 6: Undefined 7: Undefined
2	SEGMENT_DONE_INT_EN	**Enable the segment done interrupt. This interrupt asserts after transfer of each segment is done.** 0: Disable 1: Enable
1	CH_EN	**If CONT_MODE_EN=0, this bit is de-asserted by hardware after the number of bytes transfferred reaches the TARGET_BYTE_CNT** 0: Disable 1: Enable
0	SW_MODE_EN	**Software mode enable. If software mode enable is set, the data transfer starts when the CH_EN bit is set. Otherwise, the data transfer starts when the DMA request is asserted.** 0: Hardware mode 1: Software mode

MEDIATEK CONFIDENTIAL
FOR fairwanes@symnex.com.tw USE ONLY

This document contains information that is proprietary to MediaTek Inc.
Unauthorized reproduction or disclosure of this information in whole or in part is strictly prohibited.

100028CC **GDMA_CT1_12** **Control Register 1 of GDMA Channel 12** **00000000**

Bit	31	30	29	28	27	26	25	24	23	22	21	20	19	18	17	16
Name	RESERVED						NUM_SEGMENT				SOURCE_DMA_REQ					
Type	RO						RW				RW					
Reset	0	0	0	0	0	0	0	0	0	0	0	0	0	0	0	0
Bit	15	14	13	12	11	10	9	8	7	6	5	4	3	2	1	0
Name	RESERVED	CONT_MODE_EN	DEST_DMA_REQ						NEXT_CH2UNMASK					COHERENT_INT_EN	CH_UNMASK_FAIL_INT_EN	CH_MASK
Type	RO	RW	RW						RW					RW	RW	RW
Reset	0	0	0	0	0	0	0	0	0	0	0	0	0	0	0	0

Bit(s)	Name	Description
25:22	NUM_SEGMENT	**the number of segments=2N, where N is the value of this field. Valid values for this field are N=0 to 8. The segment size=(TARGET_BYTE_CNT/2N). It the TARGET_BYTE_CNT is not a multiple of 2N, the segment size = {(TARGET_BYTE_CNT/2N) + 1}.**
21:16	SOURCE_DMA_REQ	**Selects the source DMA request** 0: DMA_REQ0 1: DMA_REQ1 2: DMA_REQ2 32: The source of the transfer is memory (always ready)
14	CONT_MODE_EN	**If CONT_MODE_EN=1, HW will NOT clear CH_EN after the number of bytes transferred reachs TARGET_BYTE_CNT. Otherwise, HW will clear CH_EN will clear the CH_EN.** 0: Continuous mode is disabled 1: Continuous mode is enabled
13:8	DEST_DMA_REQ	**Selects the destination DMA request** 0: DMA_REQ0 1: DMA_REQ1 2: DMA_REQ2 32: The destination of the transfer is memory (always ready)
7:3	NEXT_CH2UNMASK	**Selects the channel to clear the CH_MASK bit. When the number of bytes transferred reaches the TARGET_BYTE_CNT, the hardware will clear the CH_MASK field of the NEXT_CH2UNMASK channel. If the hardware does not need to clear CH_MASK field of any channel, this field should be set to the channel itself.** 0: Channel 0 1: Channel 1 n: Channel n
2	COHERENT_INT_EN	**If COHERENT_INT_EN is set, GDMA will issue a dummy read to destination after the last write to destination to avoid data coherent problem. Note: DO NOT set this field if the destination is not MEM. (may corrupt data, if destination is a FIFO)** 0: Disable 1: Enable
1	CH_UNMASK_FAIL_INT_EN	**If this field is set, an interrupt will be assert when HW detect the CH_MASK field of NEXT_CH2UNMASK channel is 1'b0 while trying to clear it.** 0: Disable 1: Enable
0	CH_MASK	**When this field is set, the transfer of this channel is gated untill this**

MEDIATEK CONFIDENTIAL
FOR farrwang@ytex.com.tw USE ONLY

This document contains information that is proprietary to MediaTek Inc.
Unauthorized reproduction or disclosure of this information in whole or in part is strictly prohibited.

Bit(s)	Name	Description
		field is clear by HW/SW. 0: Channel is not masked 1: Channel is masked

100028D0 **GDMA_SA_13** **Source Address of GDMA Channel 13** **00000000**

Bit	31	30	29	28	27	26	25	24	23	22	21	20	19	18	17	16
Name	SOURCE_ADDR[31:16]															
Type	RW															
Reset	0	0	0	0	0	0	0	0	0	0	0	0	0	0	0	0
Bit	15	14	13	12	11	10	9	8	7	6	5	4	3	2	1	0
Name	SOURCE_ADDR[15:0]															
Type	RW															
Reset	0	0	0	0	0	0	0	0	0	0	0	0	0	0	0	0

Bit(s)	Name	Description
31:0	SOURCE_ADDR	**Souce address**

100028D4 **GDMA_DA_13** **Destination Address of GDMA Channel 13** **00000000**

Bit	31	30	29	28	27	26	25	24	23	22	21	20	19	18	17	16
Name	DEST_ADDR[31:16]															
Type	RW															
Reset	0	0	0	0	0	0	0	0	0	0	0	0	0	0	0	0
Bit	15	14	13	12	11	10	9	8	7	6	5	4	3	2	1	0
Name	DEST_ADDR[15:0]															
Type	RW															
Reset	0	0	0	0	0	0	0	0	0	0	0	0	0	0	0	0

Bit(s)	Name	Description
31:0	DEST_ADDR	**Destination address**

100028D8 **GDMA_CT0_13** **Control Register 0 of GDMA Channel 13** **00000000**

Bit	31	30	29	28	27	26	25	24	23	22	21	20	19	18	17	16
Name	TARGET_BYTE_CNT															
Type	RW															
Reset	0	0	0	0	0	0	0	0	0	0	0	0	0	0	0	0
Bit	15	14	13	12	11	10	9	8	7	6	5	4	3	2	1	0
Name	CURR_SEGMENT								SOURCE_ADDR_MODE	DEST_ADDR_MODE	BURST_SIZE			SEGMENT_DONE_INT_EN	CH_EN	SW_MODE_EN
Type	RO								RW	RW	RW			RW	RW	RW
Reset	0	0	0	0	0	0	0	0	0	0	0	0	0	0	0	0

Bit(s)	Name	Description

MEDIATEK CONFIDENTIAL
FOR farrwang@synnex.com.tw USE ONLY

This document contains information that is proprietary to MediaTek Inc.
Unauthorized reproduction or disclosure of this information in whole or in part is strictly prohibited.

Bit(s)	Name	Description
31:16	TARGET_BYTE_CNT	**The number of bytes to be transferred**
15:8	CURR_SEGMENT	**Indicates the current segment (0 to 255)**
7	SOURCE_ADDR_MODE	**Sets the source address mode** 0: Incremental mode 1: Fix mode
6	DEST_ADDR_MODE	**Sets the destination address mode** 0: Incremental mode 1: Fix mode
5:3	BURST_SIZE	**Sets the number of double words in each burst transaction** 0: 1 DW 1: 2 DWs 2: 4 DWs 3: 8 DWs 4: 16 DWs 5: Undefined 6: Undefined 7: Undefined
2	SEGMENT_DONE_INT_EN	**Enable the segment done interrupt. This interrupt asserts after transfer of each segment is done.** 0: Disable 1: Enable
1	CH_EN	**If CONT_MODE_EN=0, this bit is de-asserted by hardware after the number of bytes transfferred reaches the TARGET_BYTE_CNT** 0: Disable 1: Enable
0	SW_MODE_EN	**Software mode enable. If software mode enable is set, the data transfer starts when the CH_EN bit is set. Otherwise, the data transfer starts when the DMA request is asserted.** 0: Hardware mode 1: Software mode

100028DC **GDMA_CT1_13** **Control Register 1 of GDMA Channel 13** **00000000**

Bit	31	30	29	28	27	26	25	24	23	22	21	20	19	18	17	16
Name	RESERVED						NUM_SEGMENT				SOURCE_DMA_REQ					
Type	RO						RW				RW					
Reset	0	0	0	0	0	0	0	0	0	0	0	0	0	0	0	0
Bit	15	14	13	12	11	10	9	8	7	6	5	4	3	2	1	0
Name	RESERVED	CONT_MODE_EN	DEST_DMA_REQ						NEXT_CH2UNMASK					COHERENT_INT_EN	CH_UNMASK_FAIL_INT_EN	CH_MASK
Type	RO	RW	RW						RW					RW	RW	RW
Reset	0	0	0	0	0	0	0	0	0	0	0	0	0	0	0	0

Bit(s)	Name	Description
25:22	NUM_SEGMENT	**the number of segments=2N, where N is the value of this field. Valid values for this field are N=0 to 8. The segment size=(TARGET_BYTE_CNT/2N). It the TARGET_BYTE_CNT is not a**

FOR MEDIATEK CONFIDENTIAL
fanwang@synnex.com.tw USE ONLY

This document contains information that is proprietary to MediaTek Inc.
Unauthorized reproduction or disclosure of this information in whole or in part is strictly prohibited.

Bit(s)	Name	Description
		multiple of 2N, the segment size = {(TARGET_BYTE_CNT/2N) + 1}.
21:16	SOURCE_DMA_REQ	**Selects the source DMA request** 0: DMA_REQ0 1: DMA_REQ1 2: DMA_REQ2 32: The source of the transfer is memory (always ready)
14	CONT_MODE_EN	**If CONT_MODE_EN=1, HW will NOT clear CH_EN after the number of bytes transferred reachs TARGET_BYTE_CNT. Otherwise, HW will clear CH_EN will clear the CH_EN.** 0: Continuous mode is disabled 1: Continuous mode is enabled
13:8	DEST_DMA_REQ	**Selects the destination DMA request** 0: DMA_REQ0 1: DMA_REQ1 2: DMA_REQ2 32: The destination of the transfer is memory (always ready)
7:3	NEXT_CH2UNMASK	**Selects the channel to clear the CH_MASK bit. When the number of bytes transferred reaches the TARGET_BYTE_CNT, the hardware will clear the CH_MASK field of the NEXT_CH2UNMASK channel. If the hardware does not need to clear CH_MASK field of any channel, this field should be set to the channel itself.** 0: Channel 0 1: Channel 1 n: Channel n
2	COHERENT_INT_EN	**If COHERENT_INT_EN is set, GDMA will issue a dummy read to destination after the last write to destination to avoid data coherent problem. Note: DO NOT set this field if the destination is not MEM. (may corrupt data, if destination is a FIFO)** 0: Disable 1: Enable
1	CH_UNMASK_FAIL_INT_EN	**If this field is set, an interrupt will be assert when HW detect the CH_MASK field of NEXT_CH2UNMASK channel is 1'b0 while trying to clear it.** 0: Disable 1: Enable
0	CH_MASK	**When this field is set, the transfer of this channel is gated untill this field is clear by HW/SW.** 0: Channel is not masked 1: Channel is masked

100028E0 GDMA_SA_14 Source Address of GDMA Channel 14 00000000

Bit	31	30	29	28	27	26	25	24	23	22	21	20	19	18	17	16
Name	SOURCE_ADDR[31:16]															
Type	RW															
Reset	0	0	0	0	0	0	0	0	0	0	0	0	0	0	0	0
Bit	15	14	13	12	11	10	9	8	7	6	5	4	3	2	1	0
Name	SOURCE_ADDR[15:0]															
Type	RW															
Reset	0	0	0	0	0	0	0	0	0	0	0	0	0	0	0	0

Bit(s)	Name	Description
31:0	SOURCE_ADDR	**Souce address**

FOR MEDIATEK CONFIDENTIAL
fanwang@synnex.com.tw USE ONLY

This document contains information that is proprietary to MediaTek Inc.
Unauthorized reproduction or disclosure of this information in whole or in part is strictly prohibited.

100028E4 **GDMA_DA_14** **Destination Address of GDMA Channel 14** **00000000**

Bit	31	30	29	28	27	26	25	24	23	22	21	20	19	18	17	16
Name	DEST_ADDR[31:16]															
Type	RW															
Reset	0	0	0	0	0	0	0	0	0	0	0	0	0	0	0	0
Bit	15	14	13	12	11	10	9	8	7	6	5	4	3	2	1	0
Name	DEST_ADDR[15:0]															
Type	RW															
Reset	0	0	0	0	0	0	0	0	0	0	0	0	0	0	0	0

Bit(s)	Name	Description
31:0	DEST_ADDR	**Destination address**

100028E8 **GDMA_CT0_14** **Control Register 0 of GDMA Channel 14** **00000000**

Bit	31	30	29	28	27	26	25	24	23	22	21	20	19	18	17	16
Name	TARGET_BYTE_CNT															
Type	RW															
Reset	0	0	0	0	0	0	0	0	0	0	0	0	0	0	0	0
Bit	15	14	13	12	11	10	9	8	7	6	5	4	3	2	1	0
Name	CURR_SEGMENT								SOURCE_ADDR_MODE	DEST_ADDR_MODE	BURST_SIZE			SEGMENT_DONE_INT_EN	CH_EN	SW_MODE_EN
Type	RO								RW	RW	RW			RW	RW	RW
Reset	0	0	0	0	0	0	0	0	0	0	0	0	0	0	0	0

Bit(s)	Name	Description
31:16	TARGET_BYTE_CNT	**The number of bytes to be transferred**
15:8	CURR_SEGMENT	**Indicates the current segment (0 to 255)**
7	SOURCE_ADDR_MODE	**Sets the source address mode** 0: Incremental mode 1: Fix mode
6	DEST_ADDR_MODE	**Sets the destination address mode** 0: Incremental mode 1: Fix mode
5:3	BURST_SIZE	**Sets the number of double words in each burst transaction** 0: 1 DW 1: 2 DWs 2: 4 DWs 3: 8 DWs 4: 16 DWs 5: Undefined 6: Undefined 7: Undefined
2	SEGMENT_DONE_INT_EN	**Enable the segment done interrupt. This interrupt asserts after transfer of each segment is done.** 0: Disable 1: Enable

MEDIATEK CONFIDENTIAL
FOR farrwang@synnex.com.tw USE ONLY

This document contains information that is proprietary to MediaTek Inc.
Unauthorized reproduction or disclosure of this information in whole or in part is strictly prohibited.

Bit(s)	Name	Description
1	CH_EN	**If CONT_MODE_EN=0, this bit is de-asserted by hardware after the number of bytes transfferred reaches the TARGET_BYTE_CNT** 0: Disable 1: Enable
0	SW_MODE_EN	**Software mode enable. If software mode enable is set, the data transfer starts when the CH_EN bit is set. Otherwise, the data transfer starts when the DMA request is asserted.** 0: Hardware mode 1: Software mode

100028EC **GDMA_CT1_14** **Control Register 1 of GDMA Channel 14** **00000000**

Bit	31	30	29	28	27	26	25	24	23	22	21	20	19	18	17	16
Name	RESERVED						NUM_SEGMENT				SOURCE_DMA_REQ					
Type	RO						RW				RW					
Reset	0	0	0	0	0	0	0	0	0	0	0	0	0	0	0	0

Bit	15	14	13	12	11	10	9	8	7	6	5	4	3	2	1	0
Name	RESERVED	CONT_MODE_EN	DEST_DMA_REQ						NEXT_CH2UNMASK					COHERENT_INT_EN	CH_UNMASK_FAIL_INT_EN	CH_MASK
Type	RO	RW	RW						RW					RW	RW	RW
Reset	0	0	0	0	0	0	0	0	0	0	0	0	0	0	0	0

Bit(s)	Name	Description
25:22	NUM_SEGMENT	**the number of segments=2N, where N is the value of this field. Valid values for this field are N=0 to 8. The segment size=(TARGET_BYTE_CNT/2N). It the TARGET_BYTE_CNT is not a multiple of 2N, the segment size = {(TARGET_BYTE_CNT/2N) + 1}.**
21:16	SOURCE_DMA_REQ	**Selects the source DMA request** 0: DMA_REQ0 1: DMA_REQ1 2: DMA_REQ2 32: The source of the transfer is memory (always ready)
14	CONT_MODE_EN	**If CONT_MODE_EN=1, HW will NOT clear CH_EN after the number of bytes transferred reachs TARGET_BYTE_CNT. Otherwise, HW will clear CH_EN will clear the CH_EN.** 0: Continuous mode is disabled 1: Continuous mode is enabled
13:8	DEST_DMA_REQ	**Selects the destination DMA request** 0: DMA_REQ0 1: DMA_REQ1 2: DMA_REQ2 32: The destination of the transfer is memory (always ready)
7:3	NEXT_CH2UNMASK	**Selects the channel to clear the CH_MASK bit. When the number of bytes transferred reaches the TARGET_BYTE_CNT, the hardware will clear the CH_MASK field of the NEXT_CH2UNMASK channel. If the hardware does not need to clear CH_MASK field of any channel, this field should be set to the channel itself.** 0: Channel 0 1: Channel 1

MEDIATEK CONFIDENTIAL
FOR fairwanes@annex.com.tw USE ONLY

This document contains information that is proprietary to MediaTek Inc.
Unauthorized reproduction or disclosure of this information in whole or in part is strictly prohibited.

Bit(s)	Name	Description
		n: Channel n
2	COHERENT_INT_EN	**If COHERENT_INT_EN is set, GDMA will issue a dummy read to destination after the last write to destination to avoid data coherent problem. Note: DO NOT set this field if the destination is not MEM. (may corrupt data, if destination is a FIFO)** 0: Disable 1: Enable
1	CH_UNMASK_FAIL_INT_EN	**If this field is set, an interrupt will be assert when HW detect the CH_MASK field of NEXT_CH2UNMASK channel is 1'b0 while trying to clear it.** 0: Disable 1: Enable
0	CH_MASK	**When this field is set, the transfer of this channel is gated untill this field is clear by HW/SW.** 0: Channel is not masked 1: Channel is masked

100028F0 GDMA_SA_15 Source Address of GDMA Channel 15 00000000

Bit	31	30	29	28	27	26	25	24	23	22	21	20	19	18	17	16
Name	SOURCE_ADDR[31:16]															
Type	RW															
Reset	0	0	0	0	0	0	0	0	0	0	0	0	0	0	0	0
Bit	15	14	13	12	11	10	9	8	7	6	5	4	3	2	1	0
Name	SOURCE_ADDR[15:0]															
Type	RW															
Reset	0	0	0	0	0	0	0	0	0	0	0	0	0	0	0	0

Bit(s)	Name	Description
31:0	SOURCE_ADDR	**Souce address**

100028F4 GDMA_DA_15 Destination Address of GDMA Channel 15 00000000

Bit	31	30	29	28	27	26	25	24	23	22	21	20	19	18	17	16
Name	DEST_ADDR[31:16]															
Type	RW															
Reset	0	0	0	0	0	0	0	0	0	0	0	0	0	0	0	0
Bit	15	14	13	12	11	10	9	8	7	6	5	4	3	2	1	0
Name	DEST_ADDR[15:0]															
Type	RW															
Reset	0	0	0	0	0	0	0	0	0	0	0	0	0	0	0	0

Bit(s)	Name	Description
31:0	DEST_ADDR	**Destination address**

100028F8 GDMA_CT0_15 Control Register 0 of GDMA Channel 15 00000000

Bit	31	30	29	28	27	26	25	24	23	22	21	20	19	18	17	16
Name	TARGET_BYTE_CNT															
Type	RW															

MEDIATEK CONFIDENTIAL
FOR hardware@symnex.com.tw USE ONLY

This document contains information that is proprietary to MediaTek Inc.
Unauthorized reproduction or disclosure of this information in whole or in part is strictly prohibited.

Reset	0	0	0	0	0	0	0	0	0	0	0	0	0	0	0	0
Bit	15	14	13	12	11	10	9	8	7	6	5	4	3	2	1	0
Name	CURR_SEGMENT								SOURCE_ADDR_MODE	DEST_ADDR_MODE	BURST_SIZE			SEGMENT_DONE_INT_EN	CH_EN	SW_MODE_EN
Type	RO								RW	RW	RW			RW	RW	RW
Reset	0	0	0	0	0	0	0	0	0	0	0	0	0	0	0	0

Bit(s)	Name	Description
31:16	TARGET_BYTE_CNT	**The number of bytes to be transferred**
15:8	CURR_SEGMENT	**Indicates the current segment (0 to 255)**
7	SOURCE_ADDR_MODE	**Sets the source address mode** 0: Incremental mode 1: Fix mode
6	DEST_ADDR_MODE	**Sets the destination address mode** 0: Incremental mode 1: Fix mode
5:3	BURST_SIZE	**Sets the number of double words in each burst transaction** 0: 1 DW 1: 2 DWs 2: 4 DWs 3: 8 DWs 4: 16 DWs 5: Undefined 6: Undefined 7: Undefined
2	SEGMENT_DONE_INT_EN	**Enable the segment done interrupt. This interrupt asserts after transfer of each segment is done.** 0: Disable 1: Enable
1	CH_EN	**If CONT_MODE_EN=0, this bit is de-asserted by hardware after the number of bytes transfferred reaches the TARGET_BYTE_CNT** 0: Disable 1: Enable
0	SW_MODE_EN	**Software mode enable. If software mode enable is set, the data transfer starts when the CH_EN bit is set. Otherwise, the data transfer starts when the DMA request is asserted.** 0: Hardware mode 1: Software mode

100028FC **GDMA_CT1_15** **Control Register 1 of GDMA Channel 15** **00000000**

Bit	31	30	29	28	27	26	25	24	23	22	21	20	19	18	17	16
Name	RESERVED						NUM_SEGMENT				SOURCE_DMA_REQ					
Type	RO						RW				RW					
Reset	0	0	0	0	0	0	0	0	0	0	0	0	0	0	0	0
Bit	15	14	13	12	11	10	9	8	7	6	5	4	3	2	1	0
Name	RESERVED	CONT_MODE_	DEST_DMA_REQ						NEXT_CH2UNMASK					COHERENT_	CH_UNMASK	CH_MASK

MEDIATEK CONFIDENTIAL
FOR Ar.wang@ymnex.com.tw USE ONLY

This document contains information that is proprietary to MediaTek Inc.
Unauthorized reproduction or disclosure of this information in whole or in part is strictly prohibited.

		EN												INT_EN	K_FAIL_INT_EN	
Type	RO	RW	RW						RW					RW	RW	RW
Reset	0	0	0	0	0	0	0	0	0	0	0	0	0	0	0	0

Bit(s)	Name	Description
25:22	NUM_SEGMENT	**the number of segments=2N, where N is the value of this field. Valid values for this field are N=0 to 8. The segment size=(TARGET_BYTE_CNT/2N). It the TARGET_BYTE_CNT is not a multiple of 2N, the segment size = {(TARGET_BYTE_CNT/2N) + 1}.**
21:16	SOURCE_DMA_REQ	**Selects the source DMA request** 0: DMA_REQ0 1: DMA_REQ1 2: DMA_REQ2 32: The source of the transfer is memory (always ready)
14	CONT_MODE_EN	**If CONT_MODE_EN=1, HW will NOT clear CH_EN after the number of bytes transferred reachs TARGET_BYTE_CNT. Otherwise, HW will clear CH_EN will clear the CH_EN.** 0: Continuous mode is disabled 1: Continuous mode is enabled
13:8	DEST_DMA_REQ	**Selects the destination DMA request** 0: DMA_REQ0 1: DMA_REQ1 2: DMA_REQ2 32: The destination of the transfer is memory (always ready)
7:3	NEXT_CH2UNMASK	**Selects the channel to clear the CH_MASK bit. When the number of bytes transferred reaches the TARGET_BYTE_CNT, the hardware will clear the CH_MASK field of the NEXT_CH2UNMASK channel. If the hardware does not need to clear CH_MASK field of any channel, this field should be set to the channel itself.** 0: Channel 0 1: Channel 1 n: Channel n
2	COHERENT_INT_EN	**If COHERENT_INT_EN is set, GDMA will issue a dummy read to destination after the last write to destination to avoid data coherent problem. Note: DO NOT set this field if the destination is not MEM. (may corrupt data, if destination is a FIFO)** 0: Disable 1: Enable
1	CH_UNMASK_FAIL_INT_EN	**If this field is set, an interrupt will be assert when HW detect the CH_MASK field of NEXT_CH2UNMASK channel is 1'b0 while trying to clear it.** 0: Disable 1: Enable
0	CH_MASK	**When this field is set, the transfer of this channel is gated untill this field is clear by HW/SW.** 0: Channel is not masked 1: Channel is masked

10002A00 **GDMA_UNMASK_INTSTS** **Unmask Fail Interrupt Status** **00000000**

Bit	31	30	29	28	27	26	25	24	23	22	21	20	19	18	17	16
Name	UNMASK_FAIL_INTSTS[31:16]															

MEDIATEK CONFIDENTIAL
FOR jarrwang@wynex.com.tw USE ONLY

This document contains information that is proprietary to MediaTek Inc.
Unauthorized reproduction or disclosure of this information in whole or in part is strictly prohibited.

Type	W1C															
Reset	0	0	0	0	0	0	0	0	0	0	0	0	0	0	0	0
Bit	15	14	13	12	11	10	9	8	7	6	5	4	3	2	1	0
Name	UNMASK_FAIL_INTSTS[15:0]															
Type	W1C															
Reset	0	0	0	0	0	0	0	0	0	0	0	0	0	0	0	0

Bit(s)	Name	Description
31:0	UNMASK_FAIL_INTSTS	**This field is the bit-map of unmask fail interrupt status of each channel. The unmask fail interrupt will assert when HW detect the CH_MASK field of NEXT_CH2UNMASK channel is 1'b0 while trying to clear it.**

10002A04 GDMA_DONE_INTSTS Segment Done Interrupt Status 00000000

Bit	31	30	29	28	27	26	25	24	23	22	21	20	19	18	17	16
Name	SEGMENT_DONE_INTSTS[31:16]															
Type	W1C															
Reset	0	0	0	0	0	0	0	0	0	0	0	0	0	0	0	0
Bit	15	14	13	12	11	10	9	8	7	6	5	4	3	2	1	0
Name	SEGMENT_DONE_INTSTS[15:0]															
Type	W1C															
Reset	0	0	0	0	0	0	0	0	0	0	0	0	0	0	0	0

Bit(s)	Name	Description
31:0	SEGMENT_DONE_INTSTS	**This field is the bit-map of segment done interrupt status of each channel. The segment done interrupt will assert when each segment is transferred completely.**

10002A20 GDMA_GCT Global Control 0000000E

Bit	31	30	29	28	27	26	25	24	23	22	21	20	19	18	17	16
Name	RESERVED[26:11]															
Type	RO															
Reset	0	0	0	0	0	0	0	0	0	0	0	0	0	0	0	0
Bit	15	14	13	12	11	10	9	8	7	6	5	4	3	2	1	0
Name	RESERVED[10:0]											TOTAL_CH_NUM		IP_VER		ARB_MODE
Type	RO											RO		RO		RW
Reset	0	0	0	0	0	0	0	0	0	0	0	0	1	1	1	0

Bit(s)	Name	Description
4:3	TOTAL_CH_NUM	**Total channel number supported** 0: 8 channels 1: 16 channels 2: 32 channels 3: Undefined
2:1	IP_VER	**GDMA core version**
0	ARB_MODE	**Arbitration mode selection** 0: channel 0 has highest priority and others are round-robin 1: All channel are round-robin

MEDIATEK CONFIDENTIAL
FOR farrwang@synnex.com.tw USE ONLY

This document contains information that is proprietary to MediaTek Inc.
Unauthorized reproduction or disclosure of this information in whole or in part is strictly prohibited.

10002A30 **GDMA_PERI_ADDR_START_0** **Peripheral Region 0 Starting Address** **10000000**

Bit	31	30	29	28	27	26	25	24	23	22	21	20	19	18	17	16
Name	PERI_ADDR_START_0[31:16]															
Type	RW															
Reset	0	0	0	1	0	0	0	0	0	0	0	0	0	0	0	0
Bit	15	14	13	12	11	10	9	8	7	6	5	4	3	2	1	0
Name	PERI_ADDR_START_0[15:0]															
Type	RW															
Reset	0	0	0	0	0	0	0	0	0	0	0	0	0	0	0	0

Bit(s)	Name	Description
31:0	PERI_ADDR_START_0	**GDMA request will direct to peripheral bus if the request address >= PERI_ADDR_START_x & < PERI_ADDR_END_x**

10002A34 **GDMA_PERI_ADDR_END_0** **Peripheral Region 0 End Address** **20000000**

Bit	31	30	29	28	27	26	25	24	23	22	21	20	19	18	17	16
Name	PERI_ADDR_END_0[31:16]															
Type	RW															
Reset	0	0	1	0	0	0	0	0	0	0	0	0	0	0	0	0
Bit	15	14	13	12	11	10	9	8	7	6	5	4	3	2	1	0
Name	PERI_ADDR_END_0[15:0]															
Type	RW															
Reset	0	0	0	0	0	0	0	0	0	0	0	0	0	0	0	0

Bit(s)	Name	Description
31:0	PERI_ADDR_END_0	**GDMA request will direct to peripheral bus if the request address >= PERI_ADDR_START_x & < PERI_ADDR_END_x**

10002A38 **GDMA_PERI_ADDR_START_1** **Peripheral Region 1 Starting Address** **20000000**

Bit	31	30	29	28	27	26	25	24	23	22	21	20	19	18	17	16
Name	PERI_ADDR_START_1[31:16]															
Type	RW															
Reset	0	0	1	0	0	0	0	0	0	0	0	0	0	0	0	0
Bit	15	14	13	12	11	10	9	8	7	6	5	4	3	2	1	0
Name	PERI_ADDR_START_1[15:0]															
Type	RW															
Reset	0	0	0	0	0	0	0	0	0	0	0	0	0	0	0	0

Bit(s)	Name	Description
31:0	PERI_ADDR_START_1	**GDMA request will direct to peripheral bus if the request address >= PERI_ADDR_START_x & < PERI_ADDR_END_x**

10002A3C **GDMA_PERI_ADDR_END_1** **Peripheral Region 1 End Address** **30000000**

Bit	31	30	29	28	27	26	25	24	23	22	21	20	19	18	17	16
Name	PERI_ADDR_END_1[31:16]															

MEDIATEK CONFIDENTIAL
FOR fariwang@symeio.com.tw USE ONLY

This document contains information that is proprietary to MediaTek Inc.
Unauthorized reproduction or disclosure of this information in whole or in part is strictly prohibited.

Type	RW															
Reset	0	0	1	1	0	0	0	0	0	0	0	0	0	0	0	0
Bit	15	14	13	12	11	10	9	8	7	6	5	4	3	2	1	0
Name	**PERI_ADDR_END_1[15:0]**															
Type	RW															
Reset	0	0	0	0	0	0	0	0	0	0	0	0	0	0	0	0

Bit(s)	Name	Description
31:0	PERI_ADDR_END_1	**GDMA request will direct to peripheral bus if the request address >= PERI_ADDR_START_x & < PERI_ADDR_END_x**

10002A40 GDMA_PERI_ADDR_START_2 Peripheral Region 2 Starting Address 10000000

Bit	31	30	29	28	27	26	25	24	23	22	21	20	19	18	17	16
Name	**PERI_ADDR_START_2[31:16]**															
Type	RW															
Reset	0	0	0	1	0	0	0	0	0	0	0	0	0	0	0	0
Bit	15	14	13	12	11	10	9	8	7	6	5	4	3	2	1	0
Name	**PERI_ADDR_START_2[15:0]**															
Type	RW															
Reset	0	0	0	0	0	0	0	0	0	0	0	0	0	0	0	0

Bit(s)	Name	Description
31:0	PERI_ADDR_START_2	**GDMA request will direct to peripheral bus if the request address >= PERI_ADDR_START_x & < PERI_ADDR_END_x**

10002A44 GDMA_PERI_ADDR_END_2 Peripheral Region 2 End Address 20000000

Bit	31	30	29	28	27	26	25	24	23	22	21	20	19	18	17	16
Name	**PERI_ADDR_END_2[31:16]**															
Type	RW															
Reset	0	0	1	0	0	0	0	0	0	0	0	0	0	0	0	0
Bit	15	14	13	12	11	10	9	8	7	6	5	4	3	2	1	0
Name	**PERI_ADDR_END_2[15:0]**															
Type	RW															
Reset	0	0	0	0	0	0	0	0	0	0	0	0	0	0	0	0

Bit(s)	Name	Description
31:0	PERI_ADDR_END_2	**GDMA request will direct to peripheral bus if the request address >= PERI_ADDR_START_x & < PERI_ADDR_END_x**

10002A48 GDMA_PERI_ADDR_START_3 Peripheral Region 3 Starting Address 60000000

Bit	31	30	29	28	27	26	25	24	23	22	21	20	19	18	17	16
Name	**PERI_ADDR_START_3[31:16]**															
Type	RW															
Reset	0	1	1	0	0	0	0	0	0	0	0	0	0	0	0	0
Bit	15	14	13	12	11	10	9	8	7	6	5	4	3	2	1	0
Name	**PERI_ADDR_START_3[15:0]**															
Type	RW															

MEDIATEK CONFIDENTIAL
FOR taiwan@sinet.com.tw USE ONLY

This document contains information that is proprietary to MediaTek Inc.
Unauthorized reproduction or disclosure of this information in whole or in part is strictly prohibited.

Reset	0	0	0	0	0	0	0	0	0	0	0	0	0	0	0	0

Bit(s)	Name	Description
31:0	PERI_ADDR_START_3	**GDMA request will direct to peripheral bus if the request address >= PERI_ADDR_START_x & < PERI_ADDR_END_x**

10002A4C **GDMA_PERI_ADDR_END_3** **Peripheral Region 3 End Address** **70000000**

Bit	31	30	29	28	27	26	25	24	23	22	21	20	19	18	17	16
Name	**PERI_ADDR_END_3[31:16]**															
Type	RW															
Reset	0	1	1	1	0	0	0	0	0	0	0	0	0	0	0	0
Bit	15	14	13	12	11	10	9	8	7	6	5	4	3	2	1	0
Name	**PERI_ADDR_END_3[15:0]**															
Type	RW															
Reset	0	0	0	0	0	0	0	0	0	0	0	0	0	0	0	0

Bit(s)	Name	Description
31:0	PERI_ADDR_END_3	**GDMA request will direct to peripheral bus if the request address >= PERI_ADDR_START_x & < PERI_ADDR_END_x**

MEDIATEK CONFIDENTIAL
FOR farrwang@synnex.com.tw USE ONLY

This document contains information that is proprietary to MediaTek Inc.
Unauthorized reproduction or disclosure of this information in whole or in part is strictly prohibited.

2.16 AES Controller

2.16.1 Registers

AES Changes LOG

Revision	Date	Author	Change Log
0.1	2013/4/30	Morrie Lin	Initialization
0.2	2013/6/5	Morrie Lin	Add desc_5dw_info_en register
0.3	2013/6/7	Morrie Lin	Update AES base address

Module name: AES Base address: (+10004000h)

Address	Name	Width	Register Function
10004000	TX_BASE_PTR0	32	**TX_BASE_PTR0** Used for DMA base address of TX ring0
10004004	TX_MAX_CNT0	32	**TX_MAX_CNT0** Used for DMA max number of TX ring0
10004008	TX_CTX_IDX0	32	**TX_CTX_IDX0** Used for CPU pointer of TX ring0
1000400C	TX_DTX_IDX0	32	**TX_DTX_IDX0** Used for DMA pointer of TX ring0
10004100	RX_BASE_PTR0	32	**RX_BASE_PTR0** Used for DMA base address of RX ring0
10004104	RX_MAX_CNT0	32	**RX_MAX_CNT0** Used for DMA max number of RX ring0
10004108	RX_CALC_IDX0	32	**RX_CALC_IDX0** Used for CPU pointer of RX ring0
1000410C	FS_DRX_IDX0	32	**FS_DRX_IDX0** Used for DMA pointer of RX ring0
10004200	PDMA_INFO	32	**PDMA_INFO** used for PDMA information
10004204	PDMA_GLO_CFG	32	**PDMA_GLO_CFG** used for PDMA setting
10004208	PDMA_RST_IDX	32	**PDMA_RST_IDX** used for PDMA setting
1000420C	DELAY_INT_CFG	32	**DELAY_INT_CFG** used for PDMA setting
10004210	PDMA_Q_CFG	32	**PDMA_Q_CFG** used for PDMA setting
10004220	PDMA_INT_STA	32	**PDMA_INT_STA** used for PDMA setting
10004228	PDMA_INT_MSK	32	**PDMA_INT_MSK** used for PDMA setting

10004000 **TX_BASE_PTR0** **TX_BASE_PTR0** **00000000**

Bit	31	30	29	28	27	26	25	24	23	22	21	20	19	18	17	16
Name	RESV															
Type	RO															

MEDIATEK CONFIDENTIAL
FOR farrwang@sunix.com.tw USE ONLY

This document contains information that is proprietary to MediaTek Inc.
Unauthorized reproduction or disclosure of this information in whole or in part is strictly prohibited.

Reset	0	0	0	0	0	0	0	0	0	0	0	0	0	0	0	0
Bit	15	14	13	12	11	10	9	8	7	6	5	4	3	2	1	0
Name	**TX_BASE_PTR0**															
Type	RW															
Reset	0	0	0	0	0	0	0	0	0	0	0	0	0	0	0	0

Bit(s)	Name	Description
31:16	RESV	**Reserved**
15:0	TX_BASE_PTR0	**Tx Base Pointer 0** Points to the base address of TX_Ring 0 (If enable desc_5dw_info_en 8-DWORD aligned address, else 4-DWORD aligned address).

10004004 **TX_MAX_CNT0** **TX_MAX_CNT0** **00000000**

Bit	31	30	29	28	27	26	25	24	23	22	21	20	19	18	17	16
Name	**RESV**															
Type	RO															
Reset	0	0	0	0	0	0	0	0	0	0	0	0	0	0	0	0
Bit	15	14	13	12	11	10	9	8	7	6	5	4	3	2	1	0
Name	**TX_MAX_CNT0**															
Type	RW															
Reset	0	0	0	0	0	0	0	0	0	0	0	0	0	0	0	0

Bit(s)	Name	Description
31:16	RESV	**Reserved**
15:0	TX_MAX_CNT0	**Tx Maximum TXD Count 0** The maximum TXD count in TXD_Ring 0.

10004008 **TX_CTX_IDX0** **TX_CTX_IDX0** **00000000**

Bit	31	30	29	28	27	26	25	24	23	22	21	20	19	18	17	16
Name	**RESV**															
Type	RO															
Reset	0	0	0	0	0	0	0	0	0	0	0	0	0	0	0	0
Bit	15	14	13	12	11	10	9	8	7	6	5	4	3	2	1	0
Name	**TX_MAX_CNT0**															
Type	RW															
Reset	0	0	0	0	0	0	0	0	0	0	0	0	0	0	0	0

Bit(s)	Name	Description
31:16	RESV	**Reserved**
15:0	TX_MAX_CNT0	**Tx CPU TXD Index n** Points to the next TXD to be used by the CPU. (If enable desc_5dw_info_en, 8-DWORD aligned address, else 4-DWORD aligned address).

1000400C **TX_DTX_IDX0** **TX_DTX_IDX0** **00000000**

Bit	31	30	29	28	27	26	25	24	23	22	21	20	19	18	17	16
Name	**RESV[23:8]**															

MEDIATEK CONFIDENTIAL
FOR farrwang@synnex.com.tw USE ONLY

This document contains information that is proprietary to MediaTek Inc.
Unauthorized reproduction or disclosure of this information in whole or in part is strictly prohibited.

Type	RO															
Reset	0	0	0	0	0	0	0	0	0	0	0	0	0	0	0	0
Bit	15	14	13	12	11	10	9	8	7	6	5	4	3	2	1	0
Name	RESV[7:0]								TX_DTX_IDX0							
Type	RO								RO							
Reset	0	0	0	0	0	0	0	0	0	0	0	0	0	0	0	0

Bit(s)	Name	Description
31:8	RESV	**Reserved**
7:0	TX_DTX_IDX0	**Tx DMA TXD Index n** Points to the next TXD to be used by the DMA. (If enable desc_5dw_info_en, 8-DWORD aligned address, else 4-DWORD aligned address).

10004100 **RX_BASE_PTR0** **RX_BASE_PTR0** **00000000**

Bit	31	30	29	28	27	26	25	24	23	22	21	20	19	18	17	16
Name	RESV															
Type	RO															
Reset	0	0	0	0	0	0	0	0	0	0	0	0	0	0	0	0
Bit	15	14	13	12	11	10	9	8	7	6	5	4	3	2	1	0
Name	RX_BASE_PTR0															
Type	RW															
Reset	0	0	0	0	0	0	0	0	0	0	0	0	0	0	0	0

Bit(s)	Name	Description
31:16	RESV	**Reserved**
15:0	RX_BASE_PTR0	**Rx Base Pointer 0** Points to the base address of RXD Ring 0 (If enable desc_5dw_info_en, 8-DWORD aligned address, else 4-DWORD aligned address).

10004104 **RX_MAX_CNT0** **RX_MAX_CNT0** **00000000**

Bit	31	30	29	28	27	26	25	24	23	22	21	20	19	18	17	16
Name	RESV															
Type	RO															
Reset	0	0	0	0	0	0	0	0	0	0	0	0	0	0	0	0
Bit	15	14	13	12	11	10	9	8	7	6	5	4	3	2	1	0
Name	RX_MAX_CNT0															
Type	RW															
Reset	0	0	0	0	0	0	0	0	0	0	0	0	0	0	0	0

Bit(s)	Name	Description
31:16	RESV	**Reserved**
15:0	RX_MAX_CNT0	**Rx Maximum Count 0** The maximum RXD count in RXD Ring 0.

10004108 **RX_CALC_IDX0** **RX_CALC_IDX0** **00000000**

Bit	31	30	29	28	27	26	25	24	23	22	21	20	19	18	17	16

MEDIATEK CONFIDENTIAL
FOR farwang@synnex.com.tw USE ONLY

This document contains information that is proprietary to MediaTek Inc.
Unauthorized reproduction or disclosure of this information in whole or in part is strictly prohibited.

Name	RESV															
Type	RO															
Reset	0	0	0	0	0	0	0	0	0	0	0	0	0	0	0	0
Bit	15	14	13	12	11	10	9	8	7	6	5	4	3	2	1	0
Name	RX_CALI_IDX0															
Type	RW															
Reset	0	0	0	0	0	0	0	0	0	0	0	0	0	0	0	0

Bit(s)	Name	Description
31:16	RESV	**Reserved**
15:0	RX_CALI_IDX0	**Rx CPU RXD Index 0** Points to the next RXD the CPU will allocate to RXD Ring 0. (If enable desc_5dw_info_en, 8-DWORD aligned address, else 4-DWORD aligned address).

1000410C FS_DRX_IDX0 FS_DRX_IDX0 00000000

Bit	31	30	29	28	27	26	25	24	23	22	21	20	19	18	17	16
Name	RESV[23:8]															
Type	RO															
Reset	0	0	0	0	0	0	0	0	0	0	0	0	0	0	0	0
Bit	15	14	13	12	11	10	9	8	7	6	5	4	3	2	1	0
Name	RESV[7:0]								RX_DRX_IDX0							
Type	RO								RO							
Reset	0	0	0	0	0	0	0	0	0	0	0	0	0	0	0	0

Bit(s)	Name	Description
31:8	RESV	**Reserved**
7:0	RX_DRX_IDX0	**Rx DMA RXD Index n** Points to the next RXD that the DMA will use in FDS Ring 0. (If enable desc_5dw_info_en, 8-DWORD aligned address, else 4-DWORD aligned address).

10004200 PDMA_INFO PDMA_INFO 4C000101

Bit	31	30	29	28	27	26	25	24	23	22	21	20	19	18	17	16
Name	VERSION				INDEX_WIDTH				BASE_PTR_WIDTH							
Type	RO				RO				RO							
Reset	0	1	0	0	1	1	0	0	0	0	0	0	0	0	0	0
Bit	15	14	13	12	11	10	9	8	7	6	5	4	3	2	1	0
Name	RX_RING_NUM								TX_RING_NUM							
Type	RO								RO							
Reset	0	0	0	0	0	0	0	1	0	0	0	0	0	0	0	1

Bit(s)	Name	Description
31:28	VERSION	**PDMA controller version.**
27:24	INDEX_WIDTH	**RX Ring index width**
23:16	BASE_PTR_WIDTH	**Base Pointer Width**
15:8	RX_RING_NUM	**Rx ring number**
7:0	TX_RING_NUM	**Tx ring number**

MEDIATEK CONFIDENTIAL
FOR fairwaves@symnex.com.tw USE ONLY

This document contains information that is proprietary to MediaTek Inc.
Unauthorized reproduction or disclosure of this information in whole or in part is strictly prohibited.

10004204 **PDMA_GLO_CFG** **PDMA_GLO_CFG** **00000450**

Bit	31	30	29	28	27	26	25	24	23	22	21	20	19	18	17	16
Name	RX_2B_OFFSET	CLKGATE_BYP	BYTE_SWAP	RESV[16:4]												
Type	RW	RO	RO	RO												
Reset	0	0	0	0	0	0	0	0	0	0	0	0	0	0	0	0
Bit	15	14	13	12	11	10	9	8	7	6	5	4	3	2	1	0
Name	RESV[3:0]				desc_5dw_info_en	multi_dma_en	share_fifo_en	desc_32b_en	BIG_ENDIAN	TX_WB_DDONE	WPDMA_BT_SIZE		RX_DMA_BUSY	RX_DMA_EN	TX_DMA_BUSY	TX_DMA_EN
Type	RO				RW	RW	RW	RW	RW	RW	RW		RO	RW	RO	RW
Reset	0	0	0	0	0	1	0	0	0	1	0	1	0	0	0	0

Bit(s)	Name	Description
31	RX_2B_OFFSET	**Rx 2 Byte Offset** Sets the byte size of the Rx buffer offset. 0: 4 bytes 1: 2 bytes. 0
30	CLKGATE_BYP	**Clock Gating Control Status Register** Controls gating of the PDMA clock. 0: PDMA clock operates in freerun mode. 1: PDMA clock is gated when idle.
29	BYTE_SWAP	**Byte Swap** The DMA applies the endian rule to convert the descriptor. 0: Byte swap not applied. 1: Apply byte swap.
28:12	RESV	**Reserved**
11	desc_5dw_info_en	**Support extension tx_info/rx_info to to 20 byte and the total length of descriptor is 32 byte.** 0: Disable 1: Enable
10	multi_dma_en	
9	share_fifo_en	
8	desc_32b_en	**Support 32 Byte alignment descriptor** Enables support for 32 Byte alignment PDMA descriptors. 0: Disable 1: Enable
7	BIG_ENDIAN	**Selects the Endian mode for the SoC platform section.** DMA applies the endian rule to convert payload and Tx/Rx information. DMA does not apply the endian rule to registers or descriptors. 0: Little endian 1: Big endian
6	TX_WB_DDONE	**Tx Write Back DDONE** Enables TX_DMA writing back DDONE into TXD. 0: Disable 1: Enable
5:4	WPDMA_BT_SIZE	**PDMA Burst Size** Defines the burst size of PDMA. 0 : 4 DWORD (16bytes). 1 : 8 DWORD (32 bytes). 2 : 16 DWORD (64 bytes).

MEDIATEK CONFIDENTIAL
FOR farrwang@synnex.com.tw USE ONLY

This document contains information that is proprietary to MediaTek Inc.
Unauthorized reproduction or disclosure of this information in whole or in part is strictly prohibited.

Bit(s)	Name	Description
		3 : 32 DWORD (128 bytes)
3	RX_DMA_BUSY	**1 : RX_DMA is busy. 0 : RX_DMA is not busy**
2	RX_DMA_EN	**Rx DMA Enable** Enables Rx DMA. When disabled, Rx DMA finishes the current receiving packet, and then stops. 0: Disable 1: Enable
1	TX_DMA_BUSY	**Indicates whether Tx DMA is busy.** 0: Not busy 1: Busy
0	TX_DMA_EN	**Tx DMA Enable** Enables Tx DMA. When disabled, Tx DMA finishes the current sending packet, and then stops. 0: Disable 1: Enable

10004208 **PDMA_RST_IDX** **PDMA_RST_IDX** **00000000**

Bit	31	30	29	28	27	26	25	24	23	22	21	20	19	18	17	16
Name	RESV[31:16]															
Type	RO															
Reset	0	0	0	0	0	0	0	0	0	0	0	0	0	0	0	0
Bit	15	14	13	12	11	10	9	8	7	6	5	4	3	2	1	0
Name	RESV[15:0]															
Type	RO															
Reset	0	0	0	0	0	0	0	0	0	0	0	0	0	0	0	0

Bit(s)	Name	Description
31:0	RESV	**Reserved**

1000420C **DELAY_INT_CFG** **DELAY_INT_CFG** **00000000**

Bit	31	30	29	28	27	26	25	24	23	22	21	20	19	18	17	16
Name	TXDLY_INT_EN	TXMAX_PINT							TXMAX_PTIME							
Type	RW	RW							RW							
Reset	0	0	0	0	0	0	0	0	0	0	0	0	0	0	0	0
Bit	15	14	13	12	11	10	9	8	7	6	5	4	3	2	1	0
Name	RXDLY_INT_EN	RXMAX_PINT							RXMAX_PTIME							
Type	RW	RW							RW							
Reset	0	0	0	0	0	0	0	0	0	0	0	0	0	0	0	0

Bit(s)	Name	Description
31	TXDLY_INT_EN	**Tx Delay Interrupt Enable** Enables the Tx delayed interrupt mechanism. 0: Disable

FOR MEDIATEK CONFIDENTIAL USE ONLY
fairwang@symnet.com.tw

This document contains information that is proprietary to MediaTek Inc.
Unauthorized reproduction or disclosure of this information in whole or in part is strictly prohibited.

Bit(s)	Name	Description
		1: Enable
30:24	TXMAX_PINT	**Tx Maximum Pending Interrupts** Specifies the maximum number of pending interrupts. When the number of pending interrupts is equal to or greater than the value specified here or the interrupt pending time has reached the limit (see below), a final TX_DLY_INT is generated. 0: Disable this feature.
23:16	TXMAX_PTIME	**Tx Maximum Pending Time** Specifies the maximum pending time for the internal TX_DONE_INT0 and TX_DONE_INT1. When the pending time is equal to or greater than TXMAX_PTIME x 20us or the number of pended TX_DONE_INT0 and TX_DONE_INT1 is equal to or greater than TXMAX_PINT (see above), a final TX_DLY_INT is generated 0: Disable this feature.
15	RXDLY_INT_EN	**Rx Delay Interrupt Enable** Enables the Rx delayed interrupt mechanism. 0: Disable 1: Enable
14:8	RXMAX_PINT	**Rx Maximum Pending Interrupts** Specifies the maximum number of pending interrupts. When the number of pended interrupts is equal to or greater than the value specified here or the interrupt pending time has reached the limit (see below), a final RX_DLY_INT is generated. 0: Disable this feature.
7:0	RXMAX_PTIME	**Rx Maximum Pending Time** Specifies the maximum pending time for the internal RX_DONE_INT. When the pending time is equal to or greater than RXMAX_PTIME x 20 us, or the number of pended RX_DONE_INT is equal to or greater than RXMAX_PCNT (see above), a final RX_DLY_INT is generated. 0: Disable this feature.

10004210 **PDMA_Q_CFG** **PDMA_Q_CFG** **00000000**

Bit	31	30	29	28	27	26	25	24	23	22	21	20	19	18	17	16
Name	RESV[27:12]															
Type	RO															
Reset	0	0	0	0	0	0	0	0	0	0	0	0	0	0	0	0
Bit	15	14	13	12	11	10	9	8	7	6	5	4	3	2	1	0
Name	RESV[11:0]												RST_DRX_IDX1			
Type	RO												RW			
Reset	0	0	0	0	0	0	0	0	0	0	0	0	0	0	0	0

Bit(s)	Name	Description
31:4	RESV	
3:0	RST_DRX_IDX1	**Will stop to block interface as RX-descriptors reach this threshold**

10004220 **PDMA_INT_STA** **PDMA_INT_STA** **00000000**

Bit	31	30	29	28	27	26	25	24	23	22	21	20	19	18	17	16
Name	RX_COHERE	RX_DLY_INT	TX_COHERE	TX_DLY_INT	RESV1											RX_DONE_INT

© 2014 MediaTek Inc.
This document contains information that is proprietary to MediaTek Inc.
Unauthorized reproduction or disclosure of this information in whole or in part is strictly prohibited.

MEDIATEK CONFIDENTIAL
FOR jerrwang@symtek.com.tw SE ONLY

	NT		NT													
Type	RW	RW	RW	RW	RO											RW
Reset	0	0	0	0	0	0	0	0	0	0	0	0	0	0	0	0
Bit	15	14	13	12	11	10	9	8	7	6	5	4	3	2	1	0
Name	RESV															TX_DONE_INT
Type	RO															RW
Reset	0	0	0	0	0	0	0	0	0	0	0	0	0	0	0	0

Bit(s)	Name	Description
31	RX_COHERENT	**Rx Coherent Interrupt** Asserts when the Rx DMA is ready to handle a queue, but cannot access the queue because the driver is not ready.
30	RX_DLY_INT	**Rx Delay Interrupt** Asserts when the number of pended Rx interrupts has reached a specified level, or when the pending time is reached. Configure this interrupt using the DELAY_INT_CFG register.
29	TX_COHERENT	**Tx Coherent Interrupt** Asserts when the Tx DMA is ready to handle a queue, but cannot access the queue because the driver is not ready.
28	TX_DLY_INT	**Tx Delay Interrupt** Asserts when the number of pended Tx interrupts has reached a specified level, or when the pending time is reached. Configure this interrupt using the DELAY_INT_CFG register.
27:17	RESV1	
16	RX_DONE_INT	**Rx Queue 0 Done Interrupt** Asserts when an Rx packet is received on Queue 0.
15:1	RESV	
0	TX_DONE_INT	**Tx Queue 0 Done Interrupt** Asserts when a Tx Queue 0 packet is transmitted.

10004228 **PDMA_INT_MSK** **PDMA_INT_MSK** **00000000**

Bit	31	30	29	28	27	26	25	24	23	22	21	20	19	18	17	16
Name	RX_COHERENT_EN	RX_DLY_INT_EN	TX_COHERENT_INT_EN	TX_DLY_INT_EN	RESV1											RX_DONE_INT_EN
Type	RW	RW	RW	RW	RO											RW
Reset	0	0	0	0	0	0	0	0	0	0	0	0	0	0	0	0
Bit	15	14	13	12	11	10	9	8	7	6	5	4	3	2	1	0
Name	RESV															TX_DONE_INT_EN
Type	RO															RW
Reset	0	0	0	0	0	0	0	0	0	0	0	0	0	0	0	0

Bit(s)	Name	Description
31	RX_COHERENT_EN	**Masks the Rx Coherent interrupt. This interrupt asserts when the Rx DMA is ready to handle a queue, but cannot access the queue because**

MEDIATEK CONFIDENTIAL
FOR farrwang@symnex.com.tw USE ONLY

This document contains information that is proprietary to MediaTek Inc.
Unauthorized reproduction or disclosure of this information in whole or in part is strictly prohibited.

Bit(s)	Name	Description
		the driver is not ready.
30	RX_DLY_INT_EN	Masks the Rx Delay interrupt. This interrupt asserts when the number of pending Rx interrupts has reached a specified level, or when the pending time is reached.
29	TX_COHERENT_INT_EN	Masks the Tx Coherent interrupt. This interrupt asserts when the Tx DMA is ready to handle a queue, but cannot access the queue because the driver is not ready.
28	TX_DLY_INT_EN	Masks the Tx Delay interrupt. This interrupt asserts when the number of pending Tx interrupts has reached a specified level, or when the pending time is reached.
27:17	RESV1	
16	RX_DONE_INT_EN	Masks the Rx Queue 0 Done interrupt. This interrupt asserts when an Rx packet is received on Queue 0.
15:1	RESV	
0	TX_DONE_INT_EN	Masks the Tx Queue 0 Done interrupt. This interrupt asserts when a Tx packet is transmitted on Queue 0.

MEDIATEK CONFIDENTIAL
FOR farrwang@ synnex.com.tw USE ONLY

This document contains information that is proprietary to MediaTek Inc.
Unauthorized reproduction or disclosure of this information in whole or in part is strictly prohibited.

MEDIATEK CONFIDENTIAL
FOR farrwang@ symnex.com.tw USE ONLY

This document contains information that is proprietary to MediaTek Inc.
Unauthorized reproduction or disclosure of this information in whole or in part is strictly prohibited.

2.17 PWM (Pulse Width Modulation)

2.17.1 Registers

PWM Changes LOG

Revision	Date	Author	Change Log
1	2013/11/26	Rick Ho	Initial Version

Module name: PWM Base address: (+10005000h)

Address	Name	Width	Register Function
10005000	PWM_ENABLE	32	PWM Enable register
10005010	PWM0_CON	32	PWM0 Control register
10005014	PWM0_HDURATION	32	PWM0 High Duration register
10005018	PWM0_LDURATION	32	PWM0 Low Duration register
1000501C	PWM0_GDURATION	32	PWM0 Guard Duration register
10005030	PWM0_SEND_DATA0	32	PWM0 Send Data0 register
10005034	PWM0_SEND_DATA1	32	PWM0 Send Data1 register
10005038	PWM0_WAVE_NUM	32	PWM0 Wave Number register
1000503C	PWM0_DATA_WIDTH	32	PWM0 Data Width register
10005040	PWM0_THRESH	32	PWM0 Thresh register
10005044	PWM0_SEND_WAVENUM	32	PWM0 Send Wave Number register
10005050	PWM1_CON	32	PWM1 Control register
10005054	PWM1_HDURATION	32	PWM1 High Duration register
10005058	PWM1_LDURATION	32	PWM1 Low Duration register
1000505C	PWM1_GDURATION	32	PWM1 Guard Duration register
10005070	PWM1_SEND_DATA0	32	PWM1 Send Data0 register
10005074	PWM1_SEND_DATA1	32	PWM1 Send Data1 register
10005078	PWM1_WAVE_NUM	32	PWM1 Wave Number register
1000507C	PWM1_DATA_WIDTH	32	PWM1 Data Width register
10005080	PWM1_THRESH	32	PWM1 Thresh register
10005084	PWM1_SEND_WAVENUM	32	PWM1 Send Wave Number register
10005090	PWM2_CON	32	PWM2 Control register
10005094	PWM2_HDURATION	32	PWM2 High Duration register

FOR MEDIATEK CONFIDENTIAL USE ONLY
tiewang@synnex.com.tw

This document contains information that is proprietary to MediaTek Inc.
Unauthorized reproduction or disclosure of this information in whole or in part is strictly prohibited.

10005098	PWM2_LDURATION	32	**PWM2 Low Duration register**
1000509C	PWM2_GDURATION	32	**PWM2 Guard Duration register**
100050B0	PWM2_SEND_DATA0	32	**PWM2 Send Data0 register**
100050B4	PWM2_SEND_DATA1	32	**PWM2 Send Data1 register**
100050B8	PWM2_WAVE_NUM	32	**PWM2 Wave Number register**
100050BC	PWM2_DATA_WIDTH	32	**PWM2 Data Width register**
100050C0	PWM2_THRESH	32	**PWM2 Thresh register**
100050C4	PWM2_SEND_WAVENUM	32	**PWM2 Send Wave Number register**
100050D0	PWM3_CON	32	**PWM3 Control register**
100050D4	PWM3_HDURATION	32	**PWM3 High Duration register**
100050D8	PWM3_LDURATION	32	**PWM3 Low Duration register**
100050DC	PWM3_GDURATION	32	**PWM3 Guard Duration register**
100050F0	PWM3_SEND_DATA0	32	**PWM3 Send Data0 register**
100050F4	PWM3_SEND_DATA1	32	**PWM3 Send Data1 register**
100050F8	PWM3_WAVE_NUM	32	**PWM3 Wave Number register**
100050FC	PWM3_DATA_WIDTH	32	**PWM3 Data Width register**
10005100	PWM3_THRESH	32	**PWM3 Thresh register**
10005104	PWM3_SEND_WAVENUM	32	**PWM3 Send Wave Number register**
1000520C	PWM_EN_STATUS	32	**PWM Enable Status register**

10005000 **PWM_ENABLE** **PWM Enable register** **00000000**

Bit	31	30	29	28	27	26	25	24	23	22	21	20	19	18	17	16
Name	RESV[27:12]															
Type	RO															
Reset	0	0	0	0	0	0	0	0	0	0	0	0	0	0	0	0
Bit	15	14	13	12	11	10	9	8	7	6	5	4	3	2	1	0
Name	RESV[11:0]												PWM3_EN	PWM2_EN	PWM1_EN	PWM0_EN
Type	RO												RW	RW	RW	RW
Reset	0	0	0	0	0	0	0	0	0	0	0	0	0	0	0	0

Bit(s)	Name	Description
31:4	RESV	**RESERVED**
3	PWM3_EN	0: disabe PWM3 1: enable PWM3

MEDIATEK CONFIDENTIAL
FOR farrwang@synnex.com.tw USE ONLY

This document contains information that is proprietary to MediaTek Inc.
Unauthorized reproduction or disclosure of this information in whole or in part is strictly prohibited.

Bit(s)	Name	Description
2	PWM2_EN	0: disabe PWM2 1: enable PWM2
1	PWM1_EN	0: disabe PWM1 1: enable PWM1
0	PWM0_EN	0: disabe PWM0 1: enable PWM0

10005010 **PWM0_CON** **PWM0 Control register** **00007E00**

Bit	31	30	29	28	27	26	25	24	23	22	21	20	19	18	17	16
Name	RESV0															
Type	RO															
Reset	0	0	0	0	0	0	0	0	0	0	0	0	0	0	0	0
Bit	15	14	13	12	11	10	9	8	7	6	5	4	3	2	1	0
Name	OLD_PWM_MODE	STOP_BITPOS						GUARD_VALUE	IDLE_VALUE	RESV1			CLKSEL	CLKDIV		
Type	RW	RW						RW	RW	RO			RW	RW		
Reset	0	1	1	1	1	1	1	0	0	0	0	0	0	0	0	0

Bit(s)	Name	Description
31:16	RESV0	**RESERVED**
15	OLD_PWM_MODE	0: New PWM mode 1: Old PWM mode
14:9	STOP_BITPOS	**The stop bit position for source data in periodical mode. In FIFO mode, it's used to indicate the stop bit position in total 64 bits. In Memory mode, it's for the stop bit position in the last 32 bits.**
8	GUARD_VALUE	**PWM0 output value when guard time.**
7	IDLE_VALUE	**PWM0 output value when idle state.**
6:4	RESV1	**RESERVED**
3	CLKSEL	**Select PWM0 clock** 0: CLK= 100KHz 1: CLK= 40MHz
2:0	CLKDIV	**Select PWM0 clock scale.** 000: CLK Hz 001: CLK/2 Hz 010: CLK/4 Hz 011: CLK/8 Hz 100: CLK/16 Hz 101: CLK/32 Hz 110: CLK/64 Hz 111: CLK/128 Hz

10005014 **PWM0_HDURATION** **PWM0 High Duration register** **00000001**

Bit	31	30	29	28	27	26	25	24	23	22	21	20	19	18	17	16
Name	RESV															
Type	RO															
Reset	0	0	0	0	0	0	0	0	0	0	0	0	0	0	0	0

MEDIATEK CONFIDENTIAL
FOR sirrwang@symnex.com.tw USE ONLY

This document contains information that is proprietary to MediaTek Inc.
Unauthorized reproduction or disclosure of this information in whole or in part is strictly prohibited.

Bit	15	14	13	12	11	10	9	8	7	6	5	4	3	2	1	0
Name	HDURATION															
Type	RW															
Reset	0	0	0	0	0	0	0	0	0	0	0	0	0	0	0	1

Bit(s)	Name	Description
31:16	RESV	**RESERVED**
15:0	HDURATION	**PWM0 pulse duration based on the current clock when PWM output is high. If duration =N, need to program N-1 in this register.** Note: The duration of PWM must not be 0.

10005018 **PWM0_LDURATION** **PWM0 Low Duration register** **00000001**

Bit	31	30	29	28	27	26	25	24	23	22	21	20	19	18	17	16
Name	RESV															
Type	RO															
Reset	0	0	0	0	0	0	0	0	0	0	0	0	0	0	0	0
Bit	15	14	13	12	11	10	9	8	7	6	5	4	3	2	1	0
Name	LDURATION															
Type	RW															
Reset	0	0	0	0	0	0	0	0	0	0	0	0	0	0	0	1

Bit(s)	Name	Description
31:16	RESV	**RESERVED**
15:0	LDURATION	**PWM0 pulse duration based on the current clock when PWM output is low. If duration =N, need to program N-1 in this register.** Note: The duration of PWM must not be 0.

1000501C **PWM0_GDURATION** **PWM0 Guard Duration register** **00000000**

Bit	31	30	29	28	27	26	25	24	23	22	21	20	19	18	17	16
Name	RESV															
Type	RO															
Reset	0	0	0	0	0	0	0	0	0	0	0	0	0	0	0	0
Bit	15	14	13	12	11	10	9	8	7	6	5	4	3	2	1	0
Name	GUARD_DURATION															
Type	RW															
Reset	0	0	0	0	0	0	0	0	0	0	0	0	0	0	0	0

Bit(s)	Name	Description
31:16	RESV	**RESERVED**
15:0	GUARD_DURATION	

10005030 **PWM0_SEND_DATA0** **PWM0 Send Data0 register** **00000000**

Bit	31	30	29	28	27	26	25	24	23	22	21	20	19	18	17	16
Name	SEND_DATA0[31:16]															
Type	RW															
Reset	0	0	0	0	0	0	0	0	0	0	0	0	0	0	0	0
Bit	15	14	13	12	11	10	9	8	7	6	5	4	3	2	1	0

MEDIATEK CONFIDENTIAL
FOR fengrwang@symtex.com.tw USE ONLY

This document contains information that is proprietary to MediaTek Inc.
Unauthorized reproduction or disclosure of this information in whole or in part is strictly prohibited.

Name	SEND_DATA0[15:0]															
Type	RW															
Reset	0	0	0	0	0	0	0	0	0	0	0	0	0	0	0	0

Bit(s)	Name	Description
31:0	SEND_DATA0	**PWM0 local buffer0 of pulse sequence data to be generated.** Note: This value should be written only in periodically FIFO mode. In other mode, this buffer is for internal memory access.

10005034 **PWM0_SEND_DATA1** **PWM0 Send Data1 register** **00000000**

Bit	31	30	29	28	27	26	25	24	23	22	21	20	19	18	17	16
Name	SEND_DATA1[31:16]															
Type	RW															
Reset	0	0	0	0	0	0	0	0	0	0	0	0	0	0	0	0
Bit	15	14	13	12	11	10	9	8	7	6	5	4	3	2	1	0
Name	SEND_DATA1[15:0]															
Type	RW															
Reset	0	0	0	0	0	0	0	0	0	0	0	0	0	0	0	0

Bit(s)	Name	Description
31:0	SEND_DATA1	**PWM0 local buffer0 of pulse sequence data to be generated.** Note: This value should be written only in periodically FIFO mode. In other mode, this buffer is for internal memory access.

10005038 **PWM0_WAVE_NUM** **PWM0 Wave Number register** **00000000**

Bit	31	30	29	28	27	26	25	24	23	22	21	20	19	18	17	16
Name	RESV															
Type	RO															
Reset	0	0	0	0	0	0	0	0	0	0	0	0	0	0	0	0
Bit	15	14	13	12	11	10	9	8	7	6	5	4	3	2	1	0
Name	WAVE_NUM															
Type	RW															
Reset	0	0	0	0	0	0	0	0	0	0	0	0	0	0	0	0

Bit(s)	Name	Description
31:16	RESV	**RESERVED**
15:0	WAVE_NUM	**The number by which PWM0 will generate from the pulse data repeatedly.** Note: If WAVE_NUM=0, the waveform generation will not stop until it is disabled.

1000503C **PWM0_DATA_WIDTH** **PWM0 Data Width register** **00000000**

Bit	31	30	29	28	27	26	25	24	23	22	21	20	19	18	17	16
Name	RESV[18:3]															
Type	RO															
Reset	0	0	0	0	0	0	0	0	0	0	0	0	0	0	0	0
Bit	15	14	13	12	11	10	9	8	7	6	5	4	3	2	1	0
Name	RESV[2:0]			DATA_WIDTH												

MEDIATEK CONFIDENTIAL
FOR fae.wang@synnex.com.tw USE ONLY

This document contains information that is proprietary to MediaTek Inc.
Unauthorized reproduction or disclosure of this information in whole or in part is strictly prohibited.

Type	RO			RW												
Reset	0	0	0	0	0	0	0	0	0	0	0	0	0	0	0	0

Bit(s)	Name	Description
31:13	RESV	**RESERVED**
12:0	DATA_WIDTH	**The PWM0 pulse data width in the old PWM mode.**

10005040 **PWM0_THRESH** **PWM0 Thresh register** **00000000**

Bit	31	30	29	28	27	26	25	24	23	22	21	20	19	18	17	16
Name	RESV[18:3]															
Type	RO															
Reset	0	0	0	0	0	0	0	0	0	0	0	0	0	0	0	0
Bit	15	14	13	12	11	10	9	8	7	6	5	4	3	2	1	0
Name	RESV[2:0]			THRESH												
Type	RO			RW												
Reset	0	0	0	0	0	0	0	0	0	0	0	0	0	0	0	0

Bit(s)	Name	Description
31:13	RESV	**RESERVED**
12:0	THRESH	**The PWM0 pulse data high/low switching threshold in the old PWM mode.**

10005044 **PWM0_SEND_WAVENUM** **PWM0 Send Wave Number register** **00000000**

Bit	31	30	29	28	27	26	25	24	23	22	21	20	19	18	17	16
Name	RESV															
Type	RO															
Reset	0	0	0	0	0	0	0	0	0	0	0	0	0	0	0	0
Bit	15	14	13	12	11	10	9	8	7	6	5	4	3	2	1	0
Name	SEND_WAVENUM															
Type	RO															
Reset	0	0	0	0	0	0	0	0	0	0	0	0	0	0	0	0

Bit(s)	Name	Description
31:16	RESV	**RESERVED**
15:0	SEND_WAVENUM	**The number by which PWM0 has already generated from the specified data source in the periodical mode.**

10005050 **PWM1_CON** **PWM1 Control register** **00007E00**

Bit	31	30	29	28	27	26	25	24	23	22	21	20	19	18	17	16
Name	RESV0															
Type	RO															
Reset	0	0	0	0	0	0	0	0	0	0	0	0	0	0	0	0
Bit	15	14	13	12	11	10	9	8	7	6	5	4	3	2	1	0
Name	OLD_PWM_MODE	STOP_BITPOS						GUARD_VALUE	IDLE_VALUE	RESV1			CLKSEL	CLKDIV		

© 2014 MediaTek Inc.
This document contains information that is proprietary to MediaTek Inc.
Unauthorized reproduction or disclosure of this information in whole or in part is strictly prohibited.

MEDIATEK CONFIDENTIAL
FOR Pai Tsung Wang@symtex.com.tw USE ONLY

Type	RW	RW						RW	RW	RO			RW	RW		
Reset	0	1	1	1	1	1	1	0	0	0	0	0	0	0	0	0

Bit(s)	Name	Description
31:16	RESV0	**RESERVED**
15	OLD_PWM_MODE	**Use old PWM mode** Note: Using old PWM mode also means periodical mode. So SRCSEL and MODE is ignored in this situation. Only old PWM mode with 32 KHz clock source (however could not work in the system sleep-mode). 0: New PWM mode 1: Old PWM mode
14:9	STOP_BITPOS	**Note: Using old PWM mode also means periodical mode. So SRCSEL and MODE is ignored in this situation. Only old PWM mode with 32 KHz clock source (however could not work in the system sleep-mode).**
8	GUARD_VALUE	**PWM1 output value when guard time.**
7	IDLE_VALUE	**PWM1 output value when idle state.**
6:4	RESV1	**Select Random Generator mode**
3	CLKSEL	**Select PWM1 clock** 0: CLK= 100KHz 1: CLK= 40MHz
2:0	CLKDIV	**Select PWM1 clock scale.** 000: CLK Hz 001: CLK/2 Hz 010: CLK/4 Hz 011: CLK/8 Hz 100: CLK/16 Hz 101: CLK/32 Hz 110: CLK/64 Hz 111: CLK/128 Hz

10005054 **PWM1_HDURATION** **PWM1 High Duration register** **00000001**

Bit	31	30	29	28	27	26	25	24	23	22	21	20	19	18	17	16
Name	RESV															
Type	RO															
Reset	0	0	0	0	0	0	0	0	0	0	0	0	0	0	0	0
Bit	15	14	13	12	11	10	9	8	7	6	5	4	3	2	1	0
Name	HDURATION															
Type	RW															
Reset	0	0	0	0	0	0	0	0	0	0	0	0	0	0	0	1

Bit(s)	Name	Description
31:16	RESV	**RESERVED**
15:0	HDURATION	**PWM1 pulse duration based on the current clock when PWM output is high. If duration =N, need to program N-1 in this register.** Note: The duration of PWM must not be 0.

10005058 **PWM1_LDURATION** **PWM1 Low Duration register** **00000001**

Bit	31	30	29	28	27	26	25	24	23	22	21	20	19	18	17	16
Name	RESV															
Type	RO															

MEDIATEK CONFIDENTIAL
FOR sarrwang@synnex.com.tw USE ONLY

This document contains information that is proprietary to MediaTek Inc.
Unauthorized reproduction or disclosure of this information in whole or in part is strictly prohibited.

Reset	0	0	0	0	0	0	0	0	0	0	0	0	0	0	0	0
Bit	15	14	13	12	11	10	9	8	7	6	5	4	3	2	1	0
Name	**LDURATION**															
Type	RW															
Reset	0	0	0	0	0	0	0	0	0	0	0	0	0	0	0	1

Bit(s)	Name	Description
31:16	RESV	**RESERVED**
15:0	LDURATION	**PWM1 pulse duration based on the current clock when PWM output is low. If duration =N, need to program N-1 in this register.** Note: The duration of PWM must not be 0.

1000505C **PWM1_GDURATION** **PWM1 Guard Duration register** **00000000**

Bit	31	30	29	28	27	26	25	24	23	22	21	20	19	18	17	16
Name	**RESV**															
Type	RO															
Reset	0	0	0	0	0	0	0	0	0	0	0	0	0	0	0	0
Bit	15	14	13	12	11	10	9	8	7	6	5	4	3	2	1	0
Name	**GUARD_DURATION**															
Type	RW															
Reset	0	0	0	0	0	0	0	0	0	0	0	0	0	0	0	0

Bit(s)	Name	Description
31:16	RESV	**RESERVED**
15:0	GUARD_DURATION	

10005070 **PWM1_SEND_DATA0** **PWM1 Send Data0 register** **00000000**

Bit	31	30	29	28	27	26	25	24	23	22	21	20	19	18	17	16
Name	**SEND_DATA0[31:16]**															
Type	RW															
Reset	0	0	0	0	0	0	0	0	0	0	0	0	0	0	0	0
Bit	15	14	13	12	11	10	9	8	7	6	5	4	3	2	1	0
Name	**SEND_DATA0[15:0]**															
Type	RW															
Reset	0	0	0	0	0	0	0	0	0	0	0	0	0	0	0	0

Bit(s)	Name	Description
31:0	SEND_DATA0	**PWM1 local buffer0 of pulse sequence data to be generated.** Note: This value should be written only in periodically FIFO mode. In other mode, this buffer is for internal memory access.

10005074 **PWM1_SEND_DATA1** **PWM1 Send Data1 register** **00000000**

Bit	31	30	29	28	27	26	25	24	23	22	21	20	19	18	17	16
Name	**SEND_DATA1[31:16]**															
Type	RW															
Reset	0	0	0	0	0	0	0	0	0	0	0	0	0	0	0	0
Bit	15	14	13	12	11	10	9	8	7	6	5	4	3	2	1	0

MEDIATEK CONFIDENTIAL
FOR farwang@synnex.com.tw USE ONLY

This document contains information that is proprietary to MediaTek Inc.
Unauthorized reproduction or disclosure of this information in whole or in part is strictly prohibited.

Name	SEND_DATA1[15:0]															
Type	RW															
Reset	0	0	0	0	0	0	0	0	0	0	0	0	0	0	0	0

Bit(s)	Name	Description
31:0	SEND_DATA1	**PWM1 local buffer0 of pulse sequence data to be generated.** Note: This value should be written only in periodically FIFO mode. In other mode, this buffer is for internal memory access.

10005078 **PWM1_WAVE_NUM** **PWM1 Wave Number register** **00000000**

Bit	31	30	29	28	27	26	25	24	23	22	21	20	19	18	17	16
Name	RESV															
Type	RO															
Reset	0	0	0	0	0	0	0	0	0	0	0	0	0	0	0	0
Bit	15	14	13	12	11	10	9	8	7	6	5	4	3	2	1	0
Name	WAVE_NUM															
Type	RW															
Reset	0	0	0	0	0	0	0	0	0	0	0	0	0	0	0	0

Bit(s)	Name	Description
31:16	RESV	**RESERVED**
15:0	WAVE_NUM	**The number by which PWM1 will generate from the pulse data repeatedly.** Note: If WAVE_NUM=0, the waveform generation will not stop until it is disabled.

1000507C **PWM1_DATA_WIDTH** **PWM1 Data Width register** **00000000**

Bit	31	30	29	28	27	26	25	24	23	22	21	20	19	18	17	16
Name	RESV[18:3]															
Type	RO															
Reset	0	0	0	0	0	0	0	0	0	0	0	0	0	0	0	0
Bit	15	14	13	12	11	10	9	8	7	6	5	4	3	2	1	0
Name	RESV[2:0]			DATA_WIDTH												
Type	RO			RW												
Reset	0	0	0	0	0	0	0	0	0	0	0	0	0	0	0	0

Bit(s)	Name	Description
31:13	RESV	**RESERVED**
12:0	DATA_WIDTH	**The PWM1 pulse data width in the old PWM mode.**

10005080 **PWM1_THRESH** **PWM1 Thresh register** **00000000**

Bit	31	30	29	28	27	26	25	24	23	22	21	20	19	18	17	16
Name	RESV[18:3]															
Type	RO															
Reset	0	0	0	0	0	0	0	0	0	0	0	0	0	0	0	0
Bit	15	14	13	12	11	10	9	8	7	6	5	4	3	2	1	0
Name	RESV[2:0]			THRESH												
Type	RO			RW												

MEDIATEK CONFIDENTIAL
FOR fanwang@synnex.com.tw USE ONLY

This document contains information that is proprietary to MediaTek Inc.
Unauthorized reproduction or disclosure of this information in whole or in part is strictly prohibited.

Reset	0	0	0	0	0	0	0	0	0	0	0	0	0	0	0	0

Bit(s)	Name	Description
31:13	RESV	**RESERVED**
12:0	THRESH	**The PWM1 pulse data high/low switching threshold in the old PWM mode.**

10005084 **PWM1_SEND_WAVENUM** **PWM1 Send Wave Number register** **00000000**

Bit	31	30	29	28	27	26	25	24	23	22	21	20	19	18	17	16
Name	RESV															
Type	RO															
Reset	0	0	0	0	0	0	0	0	0	0	0	0	0	0	0	0
Bit	15	14	13	12	11	10	9	8	7	6	5	4	3	2	1	0
Name	SEND_WAVENUM															
Type	RO															
Reset	0	0	0	0	0	0	0	0	0	0	0	0	0	0	0	0

Bit(s)	Name	Description
31:16	RESV	**RESERVED**
15:0	SEND_WAVENUM	**The number by which PWM1 has already generated from the specified data source in the periodical mode.**

10005090 **PWM2_CON** **PWM2 Control register** **00007E00**

Bit	31	30	29	28	27	26	25	24	23	22	21	20	19	18	17	16
Name	RESV0															
Type	RO															
Reset	0	0	0	0	0	0	0	0	0	0	0	0	0	0	0	0
Bit	15	14	13	12	11	10	9	8	7	6	5	4	3	2	1	0
Name	OLD_PWM_MODE	STOP_BITPOS						GUARD_VALUE	IDLE_VALUE	RESV1			CLKSEL	CLKDIV		
Type	RW	RW						RW	RW	RO			RW	RW		
Reset	0	1	1	1	1	1	1	0	0	0	0	0	0	0	0	0

Bit(s)	Name	Description
31:16	RESV0	**RESERVED**
15	OLD_PWM_MODE	**Use old PWM mode** Note: Using old PWM mode also means periodical mode. So SRCSEL and MODE is ignored in this situation. Only old PWM mode with 32 KHz clock source (however could not work in the system sleep-mode). 0: New PWM mode 1: Old PWM mode
14:9	STOP_BITPOS	**Note: Using old PWM mode also means periodical mode. So SRCSEL and MODE is ignored in this situation. Only old PWM mode with 32 KHz clock source (however could not work in the system sleep-mode).**
8	GUARD_VALUE	**PWM2 output value when guard time.**
7	IDLE_VALUE	**PWM2 output value when idle state.**
6:4	RESV1	**Select Random Generator mode**

MEDIATEK CONFIDENTIAL
FOR farrwang@symnex.com.tw USE ONLY

This document contains information that is proprietary to MediaTek Inc.
Unauthorized reproduction or disclosure of this information in whole or in part is strictly prohibited.

Bit(s)	Name	Description
3	CLKSEL	**Select PWM2 clock** 0: CLK= 100KHz 1: CLK= 40MHz
2:0	CLKDIV	**Select PWM2 clock scale.** 000: CLK Hz 001: CLK/2 Hz 010: CLK/4 Hz 011: CLK/8 Hz 100: CLK/16 Hz 101: CLK/32 Hz 110: CLK/64 Hz 111: CLK/128 Hz

10005094 **PWM2_HDURATION** **PWM2 High Duration register** **00000001**

Bit	31	30	29	28	27	26	25	24	23	22	21	20	19	18	17	16
Name	RESV															
Type	RO															
Reset	0	0	0	0	0	0	0	0	0	0	0	0	0	0	0	0
Bit	15	14	13	12	11	10	9	8	7	6	5	4	3	2	1	0
Name	HDURATION															
Type	RW															
Reset	0	0	0	0	0	0	0	0	0	0	0	0	0	0	0	1

Bit(s)	Name	Description
31:16	RESV	**RESERVED**
15:0	HDURATION	**PWM2 pulse duration based on the current clock when PWM output is high. If duration =N, need to program N-1 in this register.** Note: The duration of PWM must not be 0.

10005098 **PWM2_LDURATION** **PWM2 Low Duration register** **00000001**

Bit	31	30	29	28	27	26	25	24	23	22	21	20	19	18	17	16
Name	RESV															
Type	RO															
Reset	0	0	0	0	0	0	0	0	0	0	0	0	0	0	0	0
Bit	15	14	13	12	11	10	9	8	7	6	5	4	3	2	1	0
Name	LDURATION															
Type	RW															
Reset	0	0	0	0	0	0	0	0	0	0	0	0	0	0	0	1

Bit(s)	Name	Description
31:16	RESV	**RESERVED**
15:0	LDURATION	**PWM2 pulse duration based on the current clock when PWM output is low. If duration =N, need to program N-1 in this register.** Note: The duration of PWM must not be 0.

1000509C **PWM2_GDURATION** **PWM2 Guard Duration register** **00000000**

Bit	31	30	29	28	27	26	25	24	23	22	21	20	19	18	17	16

MEDIATEK CONFIDENTIAL
FOR farrwang@synnex.com.tw USE ONLY

This document contains information that is proprietary to MediaTek Inc.
Unauthorized reproduction or disclosure of this information in whole or in part is strictly prohibited.

Name	RESV															
Type	RO															
Reset	0	0	0	0	0	0	0	0	0	0	0	0	0	0	0	0
Bit	15	14	13	12	11	10	9	8	7	6	5	4	3	2	1	0
Name	GUARD_DURATION															
Type	RW															
Reset	0	0	0	0	0	0	0	0	0	0	0	0	0	0	0	0

Bit(s)	Name	Description
31:16	RESV	**RESERVED**
15:0	GUARD_DURATION	

100050B0 **PWM2_SEND_DATA0** **PWM2 Send Data0 register** **00000000**

Bit	31	30	29	28	27	26	25	24	23	22	21	20	19	18	17	16
Name	SEND_DATA0[31:16]															
Type	RW															
Reset	0	0	0	0	0	0	0	0	0	0	0	0	0	0	0	0
Bit	15	14	13	12	11	10	9	8	7	6	5	4	3	2	1	0
Name	SEND_DATA0[15:0]															
Type	RW															
Reset	0	0	0	0	0	0	0	0	0	0	0	0	0	0	0	0

Bit(s)	Name	Description
31:0	SEND_DATA0	**PWM2 local buffer0 of pulse sequence data to be generated.** Note: This value should be written only in periodically FIFO mode. In other mode, this buffer is for internal memory access.

100050B4 **PWM2_SEND_DATA1** **PWM2 Send Data1 register** **00000000**

Bit	31	30	29	28	27	26	25	24	23	22	21	20	19	18	17	16
Name	SEND_DATA1[31:16]															
Type	RW															
Reset	0	0	0	0	0	0	0	0	0	0	0	0	0	0	0	0
Bit	15	14	13	12	11	10	9	8	7	6	5	4	3	2	1	0
Name	SEND_DATA1[15:0]															
Type	RW															
Reset	0	0	0	0	0	0	0	0	0	0	0	0	0	0	0	0

Bit(s)	Name	Description
31:0	SEND_DATA1	**PWM2 local buffer0 of pulse sequence data to be generated.** Note: This value should be written only in periodically FIFO mode. In other mode, this buffer is for internal memory access.

100050B8 **PWM2_WAVE_NUM** **PWM2 Wave Number register** **00000000**

Bit	31	30	29	28	27	26	25	24	23	22	21	20	19	18	17	16
Name	RESV															
Type	RO															
Reset	0	0	0	0	0	0	0	0	0	0	0	0	0	0	0	0
Bit	15	14	13	12	11	10	9	8	7	6	5	4	3	2	1	0

MEDIATEK CONFIDENTIAL
FOR fengrwang@synnex.com.tw USE ONLY

This document contains information that is proprietary to MediaTek Inc.
Unauthorized reproduction or disclosure of this information in whole or in part is strictly prohibited.

Name	WAVE_NUM															
Type	RW															
Reset	0	0	0	0	0	0	0	0	0	0	0	0	0	0	0	0

Bit(s)	Name	Description
31:16	RESV	**RESERVED**
15:0	WAVE_NUM	**The number by which PWM2 will generate from the pulse data repeatedly.** Note: If WAVE_NUM=0, the waveform generation will not stop until it is disabled.

100050BC **PWM2_DATA_WIDTH** **PWM2 Data Width register** **00000000**

Bit	31	30	29	28	27	26	25	24	23	22	21	20	19	18	17	16
Name	RESV[18:3]															
Type	RO															
Reset	0	0	0	0	0	0	0	0	0	0	0	0	0	0	0	0
Bit	15	14	13	12	11	10	9	8	7	6	5	4	3	2	1	0
Name	RESV[2:0]			DATA_WIDTH												
Type	RO			RW												
Reset	0	0	0	0	0	0	0	0	0	0	0	0	0	0	0	0

Bit(s)	Name	Description
31:13	RESV	**RESERVED**
12:0	DATA_WIDTH	**The PWM2 pulse data width in the old PWM mode.**

100050C0 **PWM2_THRESH** **PWM2 Thresh register** **00000000**

Bit	31	30	29	28	27	26	25	24	23	22	21	20	19	18	17	16
Name	RESV[18:3]															
Type	RO															
Reset	0	0	0	0	0	0	0	0	0	0	0	0	0	0	0	0
Bit	15	14	13	12	11	10	9	8	7	6	5	4	3	2	1	0
Name	RESV[2:0]			THRESH												
Type	RO			RW												
Reset	0	0	0	0	0	0	0	0	0	0	0	0	0	0	0	0

Bit(s)	Name	Description
31:13	RESV	**RESERVED**
12:0	THRESH	**The PWM2 pulse data high/low switching threshold in the old PWM mode.**

100050C4 **PWM2_SEND_WAVENUM** **PWM2 Send Wave Number register** **00000000**

Bit	31	30	29	28	27	26	25	24	23	22	21	20	19	18	17	16
Name	RESV															
Type	RO															
Reset	0	0	0	0	0	0	0	0	0	0	0	0	0	0	0	0
Bit	15	14	13	12	11	10	9	8	7	6	5	4	3	2	1	0
Name	SEND_WAVENUM															
Type	RO															

MEDIATEK CONFIDENTIAL
FOR fan.wang@symnex.com.tw USE ONLY

This document contains information that is proprietary to MediaTek Inc.
Unauthorized reproduction or disclosure of this information in whole or in part is strictly prohibited.

Reset	0	0	0	0	0	0	0	0	0	0	0	0	0	0	0	0

Bit(s)	Name	Description
31:16	RESV	**RESERVED**
15:0	SEND_WAVENUM	**The number by which PWM2 has already generated from the specified data source in the periodical mode.**

100050D0 **PWM3_CON** **PWM3 Control register** **00007E00**

Bit	31	30	29	28	27	26	25	24	23	22	21	20	19	18	17	16
Name	RESV0															
Type	RO															
Reset	0	0	0	0	0	0	0	0	0	0	0	0	0	0	0	0
Bit	15	14	13	12	11	10	9	8	7	6	5	4	3	2	1	0
Name	OLD_PWM_MODE	STOP_BITPOS						GUARD_VALUE	IDLE_VALUE	RESV1			CLKSEL	CLKDIV		
Type	RW	RW						RW	RW	RO			RW	RW		
Reset	0	1	1	1	1	1	1	0	0	0	0	0	0	0	0	0

Bit(s)	Name	Description
31:16	RESV0	**RESERVED**
15	OLD_PWM_MODE	**Use old PWM mode** Note: Using old PWM mode also means periodical mode. So SRCSEL and MODE is ignored in this situation. Only old PWM mode with 32 KHz clock source (however could not work in the system sleep-mode). 0: New PWM mode 1: Old PWM mode
14:9	STOP_BITPOS	**Note: Using old PWM mode also means periodical mode. So SRCSEL and MODE is ignored in this situation. Only old PWM mode with 32 KHz clock source (however could not work in the system sleep-mode).**
8	GUARD_VALUE	**PWM3 output value when guard time.**
7	IDLE_VALUE	**PWM3 output value when idle state.**
6:4	RESV1	**Select Random Generator mode**
3	CLKSEL	**Select PWM3 clock** 0: CLK= 100KHz 1: CLK= 40MHz
2:0	CLKDIV	**Select PWM3 clock scale.** 000: CLK Hz 001: CLK/2 Hz 010: CLK/4 Hz 011: CLK/8 Hz 100: CLK/16 Hz 101: CLK/32 Hz 110: CLK/64 Hz 111: CLK/128 Hz

100050D4 **PWM3_HDURATION** **PWM3 High Duration register** **00000001**

Bit	31	30	29	28	27	26	25	24	23	22	21	20	19	18	17	16

MEDIATEK CONFIDENTIAL
FOR farrwang@mitex.com.tw USE ONLY

This document contains information that is proprietary to MediaTek Inc.
Unauthorized reproduction or disclosure of this information in whole or in part is strictly prohibited.

Name	RESV															
Type	RO															
Reset	0	0	0	0	0	0	0	0	0	0	0	0	0	0	0	0
Bit	15	14	13	12	11	10	9	8	7	6	5	4	3	2	1	0
Name	HDURATION															
Type	RW															
Reset	0	0	0	0	0	0	0	0	0	0	0	0	0	0	0	1

Bit(s)	Name	Description
31:16	RESV	**RESERVED**
15:0	HDURATION	**PWM3 pulse duration based on the current clock when PWM output is high. If duration =N, need to program N-1 in this register.** Note: The duration of PWM must not be 0.

100050D8 **PWM3_LDURATION** **PWM3 Low Duration register** **00000001**

Bit	31	30	29	28	27	26	25	24	23	22	21	20	19	18	17	16
Name	RESV															
Type	RO															
Reset	0	0	0	0	0	0	0	0	0	0	0	0	0	0	0	0
Bit	15	14	13	12	11	10	9	8	7	6	5	4	3	2	1	0
Name	LDURATION															
Type	RW															
Reset	0	0	0	0	0	0	0	0	0	0	0	0	0	0	0	1

Bit(s)	Name	Description
31:16	RESV	**RESERVED**
15:0	LDURATION	**PWM3 pulse duration based on the current clock when PWM output is low. If duration =N, need to program N-1 in this register.** Note: The duration of PWM must not be 0.

100050DC **PWM3_GDURATION** **PWM3 Guard Duration register** **00000000**

Bit	31	30	29	28	27	26	25	24	23	22	21	20	19	18	17	16
Name	RESV															
Type	RO															
Reset	0	0	0	0	0	0	0	0	0	0	0	0	0	0	0	0
Bit	15	14	13	12	11	10	9	8	7	6	5	4	3	2	1	0
Name	GUARD_DURATION															
Type	RW															
Reset	0	0	0	0	0	0	0	0	0	0	0	0	0	0	0	0

Bit(s)	Name	Description
31:16	RESV	**RESERVED**
15:0	GUARD_DURATION	

100050F0 **PWM3_SEND_DATA0** **PWM3 Send Data0 register** **00000000**

Bit	31	30	29	28	27	26	25	24	23	22	21	20	19	18	17	16
Name	SEND_DATA0[31:16]															

MEDIATEK CONFIDENTIAL
FOR farrwang@synnex.com.tw USE ONLY

This document contains information that is proprietary to MediaTek Inc.
Unauthorized reproduction or disclosure of this information in whole or in part is strictly prohibited.

Type	RW															
Reset	0	0	0	0	0	0	0	0	0	0	0	0	0	0	0	0
Bit	15	14	13	12	11	10	9	8	7	6	5	4	3	2	1	0
Name	SEND_DATA0[15:0]															
Type	RW															
Reset	0	0	0	0	0	0	0	0	0	0	0	0	0	0	0	0

Bit(s)	Name	Description
31:0	SEND_DATA0	**PWM3 local buffer0 of pulse sequence data to be generated.** Note: This value should be written only in periodically FIFO mode. In other mode, this buffer is for internal memory access.

100050F4 PWM3_SEND_DATA1 PWM3 Send Data1 register 00000000

Bit	31	30	29	28	27	26	25	24	23	22	21	20	19	18	17	16
Name	SEND_DATA1[31:16]															
Type	RW															
Reset	0	0	0	0	0	0	0	0	0	0	0	0	0	0	0	0
Bit	15	14	13	12	11	10	9	8	7	6	5	4	3	2	1	0
Name	SEND_DATA1[15:0]															
Type	RW															
Reset	0	0	0	0	0	0	0	0	0	0	0	0	0	0	0	0

Bit(s)	Name	Description
31:0	SEND_DATA1	**PWM3 local buffer0 of pulse sequence data to be generated.** Note: This value should be written only in periodically FIFO mode. In other mode, this buffer is for internal memory access.

100050F8 PWM3_WAVE_NUM PWM3 Wave Number register 00000000

Bit	31	30	29	28	27	26	25	24	23	22	21	20	19	18	17	16
Name	RESV															
Type	RO															
Reset	0	0	0	0	0	0	0	0	0	0	0	0	0	0	0	0
Bit	15	14	13	12	11	10	9	8	7	6	5	4	3	2	1	0
Name	WAVE_NUM															
Type	RW															
Reset	0	0	0	0	0	0	0	0	0	0	0	0	0	0	0	0

Bit(s)	Name	Description
31:16	RESV	**RESERVED**
15:0	WAVE_NUM	**The number by which PWM3 will generate from the pulse data repeatedly.** Note: If WAVE_NUM=0, the waveform generation will not stop until it is disabled.

100050FC PWM3_DATA_WIDTH PWM3 Data Width register 00000000

Bit	31	30	29	28	27	26	25	24	23	22	21	20	19	18	17	16
Name	RESV[18:3]															
Type	RO															

MEDIATEK CONFIDENTIAL
FOR farrwang@synney.com.tw USE ONLY

This document contains information that is proprietary to MediaTek Inc.
Unauthorized reproduction or disclosure of this information in whole or in part is strictly prohibited.

Reset	0	0	0	0	0	0	0	0	0	0	0	0	0	0	0	0
Bit	15	14	13	12	11	10	9	8	7	6	5	4	3	2	1	0
Name	**RESV[2:0]**			**DATA_WIDTH**												
Type	RO			RW												
Reset	0	0	0	0	0	0	0	0	0	0	0	0	0	0	0	0

Bit(s)	Name	Description
31:13	RESV	**RESERVED**
12:0	DATA_WIDTH	**The PWM3 pulse data width in the old PWM mode.**

10005100 **PWM3_THRESH** **PWM3 Thresh register** **00000000**

Bit	31	30	29	28	27	26	25	24	23	22	21	20	19	18	17	16
Name	**RESV[18:3]**															
Type	RO															
Reset	0	0	0	0	0	0	0	0	0	0	0	0	0	0	0	0
Bit	15	14	13	12	11	10	9	8	7	6	5	4	3	2	1	0
Name	**RESV[2:0]**			**THRESH**												
Type	RO			RW												
Reset	0	0	0	0	0	0	0	0	0	0	0	0	0	0	0	0

Bit(s)	Name	Description
31:13	RESV	**RESERVED**
12:0	THRESH	**The PWM3 pulse data high/low switching threshold in the old PWM mode.**

10005104 **PWM3_SEND_WAVENUM** **PWM3 Send Wave Number register** **00000000**

Bit	31	30	29	28	27	26	25	24	23	22	21	20	19	18	17	16
Name	**RESV**															
Type	RO															
Reset	0	0	0	0	0	0	0	0	0	0	0	0	0	0	0	0
Bit	15	14	13	12	11	10	9	8	7	6	5	4	3	2	1	0
Name	**SEND_WAVENUM**															
Type	RO															
Reset	0	0	0	0	0	0	0	0	0	0	0	0	0	0	0	0

Bit(s)	Name	Description
31:16	RESV	**RESERVED**
15:0	SEND_WAVENUM	**The number by which PWM3 has already generated from the specified data source in the periodical mode.**

1000520C **PWM_EN_STATUS** **PWM Enable Status register** **00000000**

Bit	31	30	29	28	27	26	25	24	23	22	21	20	19	18	17	16
Name	**RESV[27:12]**															
Type	RO															
Reset	0	0	0	0	0	0	0	0	0	0	0	0	0	0	0	0
Bit	15	14	13	12	11	10	9	8	7	6	5	4	3	2	1	0
Name	**RESV[11:0]**												**PWM3_**	**PWM2_**	**PWM1_**	**PWM0_**

MEDIATEK CONFIDENTIAL
FOR fanwang@symnex.com.tw USE ONLY

This document contains information that is proprietary to MediaTek Inc.
Unauthorized reproduction or disclosure of this information in whole or in part is strictly prohibited.

													EN_ ST	EN_ ST	EN_ ST	EN_ ST
Type	RO												RO	RO	RO	RO
Reset	0	0	0	0	0	0	0	0	0	0	0	0	0	0	0	0

Bit(s)	Name	Description
31:4	RESV	**RESERVED**
3	PWM3_EN_ST	**PWM3 enable status**
2	PWM2_EN_ST	**PWM2 enable status**
1	PWM1_EN_ST	**PWM1 enable status**
0	PWM0_EN_ST	**PWM0 enable status**

MEDIATEK CONFIDENTIAL
FOR farrwang@ synnex.com.tw USE ONLY

This document contains information that is proprietary to MediaTek Inc.
Unauthorized reproduction or disclosure of this information in whole or in part is strictly prohibited.

2.18 Frame Engine

2.18.1 Registers

SDM Changes LOG

Revision	Date	Author	Change Log
0.1	2013/5/27	PeterCT WU	Initialization

Module name: SDM Base address: (+10100000h)

Address	Name	Width	Register Function
10100800	TX_BASE_PTR_0	32	TX Ring #0 Base Pointer
10100804	TX_MAX_CNT_0	32	TX Ring #0 Maximum Count
10100808	TX_CTX_IDX_0	32	TX Ring #0 CPU pointer
1010080C	TX_DTX_IDX_0	32	TX Ring #0 DMA poitner
10100810	TX_BASE_PTR_1	32	TX Ring #1 Base Pointer
10100814	TX_MAX_CNT_1	32	TX Ring #1 Maximum Count
10100818	TX_CTX_IDX_1	32	TX Ring #1 CPU pointer
1010081C	TX_DTX_IDX_1	32	TX Ring #1 DMA poitner
10100820	TX_BASE_PTR_2	32	TX Ring #2 Base Pointer
10100824	TX_MAX_CNT_2	32	TX Ring #2 Maximum Count
10100828	TX_CTX_IDX_2	32	TX Ring #2 CPU pointer
1010082C	TX_DTX_IDX_2	32	TX Ring #2 DMA poitner
10100830	TX_BASE_PTR_3	32	TX Ring #3 Base Pointer
10100834	TX_MAX_CNT_3	32	TX Ring #3 Maximum Count
10100838	TX_CTX_IDX_3	32	TX Ring #3 CPU pointer
1010083C	TX_DTX_IDX_3	32	TX Ring #3 DMA poitner
10100900	RX_BASE_PTR_0	32	RX Ring #0 Base Pointer
10100904	RX_MAX_CNT_0	32	RX Ring #0 Maximum Count
10100908	RX_CRX_IDX_0	32	RX Ring #0 CPU pointer
1010090C	RX_DRX_IDX_0	32	RX Ring #0 DMA poitner
10100910	RX_BASE_PTR_1	32	RX Ring #1 Base Pointer
10100914	RX_MAX_CNT_1	32	RX Ring #1 Maximum Count
10100918	RX_CRX_IDX_1	32	RX Ring #1 CPU pointer
1010091C	RX_DRX_IDX_1	32	RX Ring #1 DMA poitner
10100A00	PDMA_INFO	32	PDMA Information
10100A04	PDMA_GLO_CFG	32	PDMA Global Configuration
10100A0C	DELAY_INT_CF	32	Delay Interrupt Configuration

MEDIATEK CONFIDENTIAL
FOR fortwang@sinnet.com.tw USE ONLY

This document contains information that is proprietary to MediaTek Inc.
Unauthorized reproduction or disclosure of this information in whole or in part is strictly prohibited.

	G		
10100A10	FREEQ_THRES	32	Free Queue Threshold
10100A20	INT_STATUS	32	Interrupt Status
10100A28	INT_MASK	32	Interrupt Mask
10100A80	PDMA_SCH	32	Scheduler Configuration for Q0&Q1
10100A84	PDMA_WRR	32	Scheduler Configuration for Q2&Q3
10100C00	SDM_CON	32	Switch DMA Control
10100C04	SDM_RING	32	Switch DMA Rx Ring
10100C08	SDM_TRING	32	Switch DMA TX Ring
10100C0C	SDM_MAC_ADRL	32	Switch MAC Address LSB
10100C10	SDM_MAC_ADRH	32	Switch MAC Address MSB
10100D00	SDM_TPCNT	32	Switch DMA Tx Packet Count
10100D04	SDM_TBCNT	32	Switch DMA TX Byte Count
10100D08	SDM_RPCNT	32	Switch DMA RX Packet Count
10100D0C	SDM_RBCNT	32	Switch DMA RX Byte Count
10100D10	SDM_CS_ERR	32	Switch DMA RX Checksum Error

10100800 **TX_BASE_PTR_0** **TX Ring #0 Base Pointer** **00000000**

Bit	31	30	29	28	27	26	25	24	23	22	21	20	19	18	17	16
Name	TX_BASE_PTR[31:16]															
Type	RW															
Reset	0	0	0	0	0	0	0	0	0	0	0	0	0	0	0	0
Bit	15	14	13	12	11	10	9	8	7	6	5	4	3	2	1	0
Name	TX_BASE_PTR[15:0]															
Type	RW															
Reset	0	0	0	0	0	0	0	0	0	0	0	0	0	0	0	0

Bit(s)	Name	Description
31:0	TX_BASE_PTR	Point to the base address of TX Ring #0 (4-DW aligned address)

10100804 **TX_MAX_CNT_0** **TX Ring #0 Maximum Count** **00000000**

Bit	31	30	29	28	27	26	25	24	23	22	21	20	19	18	17	16
Name																
Type																
Reset																
Bit	15	14	13	12	11	10	9	8	7	6	5	4	3	2	1	0
Name					TX_MAX_CNT											
Type					RW											
Reset					0	0	0	0	0	0	0	0	0	0	0	0

Bit(s)	Name	Description
11:0	TX_MAX_CNT	The maximum number of TXD count in TX Ring #0

10100808 **TX_CTX_IDX_** **TX Ring #0 CPU pointer** **0000000**

MEDIATEK CONFIDENTIAL
FOR fartwang@synnet.com.tw USE ONLY

This document contains information that is proprietary to MediaTek Inc.
Unauthorized reproduction or disclosure of this information in whole or in part is strictly prohibited.

0 0

Bit	31	30	29	28	27	26	25	24	23	22	21	20	19	18	17	16
Name																
Type																
Reset																
Bit	15	14	13	12	11	10	9	8	7	6	5	4	3	2	1	0
Name					TX_CTX_IDX											
Type					RW											
Reset					0	0	0	0	0	0	0	0	0	0	0	0

Bit(s)	Name	Description
11:0	TX_CTX_IDX	**Point to the next TXD CPU wants to use**

1010080C **TX_DTX_IDX_0** **TX Ring #0 DMA poitner** **00000000**

Bit	31	30	29	28	27	26	25	24	23	22	21	20	19	18	17	16
Name																
Type																
Reset																
Bit	15	14	13	12	11	10	9	8	7	6	5	4	3	2	1	0
Name					TX_DTX_IDX											
Type					RO											
Reset					0	0	0	0	0	0	0	0	0	0	0	0

Bit(s)	Name	Description
11:0	TX_DTX_IDX	**Point to the next TXD DMA wants to use**

10100810 **TX_BASE_PTR_1** **TX Ring #1 Base Pointer** **00000000**

Bit	31	30	29	28	27	26	25	24	23	22	21	20	19	18	17	16
Name	TX_BASE_PTR[31:16]															
Type	RW															
Reset	0	0	0	0	0	0	0	0	0	0	0	0	0	0	0	0
Bit	15	14	13	12	11	10	9	8	7	6	5	4	3	2	1	0
Name	TX_BASE_PTR[15:0]															
Type	RW															
Reset	0	0	0	0	0	0	0	0	0	0	0	0	0	0	0	0

Bit(s)	Name	Description
31:0	TX_BASE_PTR	**Point to the base address of TX Ring #0 (4-DW aligned address)**

10100814 **TX_MAX_CNT_1** **TX Ring #1 Maximum Count** **00000000**

Bit	31	30	29	28	27	26	25	24	23	22	21	20	19	18	17	16
Name																
Type																
Reset																
Bit	15	14	13	12	11	10	9	8	7	6	5	4	3	2	1	0
Name					TX_MAX_CNT											
Type					RW											
Reset					0	0	0	0	0	0	0	0	0	0	0	0

MEDIATEK CONFIDENTIAL
FOR tarr.wang@synnex.com.tw USE ONLY

This document contains information that is proprietary to MediaTek Inc.
Unauthorized reproduction or disclosure of this information in whole or in part is strictly prohibited.

Bit(s)	Name	Description
11:0	TX_MAX_CNT	**The maximum number of TXD count in TX Ring #0**

10100818 **TX_CTX_IDX_1** **TX Ring #1 CPU pointer** **00000000**

Bit	31	30	29	28	27	26	25	24	23	22	21	20	19	18	17	16
Name																
Type																
Reset																
Bit	15	14	13	12	11	10	9	8	7	6	5	4	3	2	1	0
Name					TX_CTX_IDX											
Type					RW											
Reset					0	0	0	0	0	0	0	0	0	0	0	0

Bit(s)	Name	Description
11:0	TX_CTX_IDX	**Point to the next TXD CPU wants to use**

1010081C **TX_DTX_IDX_1** **TX Ring #1 DMA poitner** **00000000**

Bit	31	30	29	28	27	26	25	24	23	22	21	20	19	18	17	16
Name																
Type																
Reset																
Bit	15	14	13	12	11	10	9	8	7	6	5	4	3	2	1	0
Name					TX_DTX_IDX											
Type					RO											
Reset					0	0	0	0	0	0	0	0	0	0	0	0

Bit(s)	Name	Description
11:0	TX_DTX_IDX	**Point to the next TXD DMA wants to use**

10100820 **TX_BASE_PTR_2** **TX Ring #2 Base Pointer** **00000000**

Bit	31	30	29	28	27	26	25	24	23	22	21	20	19	18	17	16
Name	TX_BASE_PTR[31:16]															
Type	RW															
Reset	0	0	0	0	0	0	0	0	0	0	0	0	0	0	0	0
Bit	15	14	13	12	11	10	9	8	7	6	5	4	3	2	1	0
Name	TX_BASE_PTR[15:0]															
Type	RW															
Reset	0	0	0	0	0	0	0	0	0	0	0	0	0	0	0	0

Bit(s)	Name	Description
31:0	TX_BASE_PTR	**Point to the base address of TX Ring #0 (4-DW aligned address)**

10100824 **TX_MAX_CNT_2** **TX Ring #2 Maximum Count** **00000000**

Bit	31	30	29	28	27	26	25	24	23	22	21	20	19	18	17	16
Name																

MEDIATEK CONFIDENTIAL
FOR fanwang@synnex.com.tw USE ONLY

This document contains information that is proprietary to MediaTek Inc.
Unauthorized reproduction or disclosure of this information in whole or in part is strictly prohibited.

Type																
Reset																
Bit	15	14	13	12	11	10	9	8	7	6	5	4	3	2	1	0
Name					TX_MAX_CNT											
Type					RW											
Reset					0	0	0	0	0	0	0	0	0	0	0	0

Bit(s)	Name	Description
11:0	TX_MAX_CNT	**The maximum number of TXD count in TX Ring #0**

10100828 **TX_CTX_IDX_2** **TX Ring #2 CPU pointer** **00000000**

Bit	31	30	29	28	27	26	25	24	23	22	21	20	19	18	17	16
Name																
Type																
Reset																
Bit	15	14	13	12	11	10	9	8	7	6	5	4	3	2	1	0
Name					TX_CTX_IDX											
Type					RW											
Reset					0	0	0	0	0	0	0	0	0	0	0	0

Bit(s)	Name	Description
11:0	TX_CTX_IDX	**Point to the next TXD CPU wants to use**

1010082C **TX_DTX_IDX_2** **TX Ring #2 DMA poitner** **00000000**

Bit	31	30	29	28	27	26	25	24	23	22	21	20	19	18	17	16
Name																
Type																
Reset																
Bit	15	14	13	12	11	10	9	8	7	6	5	4	3	2	1	0
Name					TX_DTX_IDX											
Type					RO											
Reset					0	0	0	0	0	0	0	0	0	0	0	0

Bit(s)	Name	Description
11:0	TX_DTX_IDX	**Point to the next TXD DMA wants to use**

10100830 **TX_BASE_PTR_3** **TX Ring #3 Base Pointer** **00000000**

Bit	31	30	29	28	27	26	25	24	23	22	21	20	19	18	17	16
Name	TX_BASE_PTR[31:16]															
Type	RW															
Reset	0	0	0	0	0	0	0	0	0	0	0	0	0	0	0	0
Bit	15	14	13	12	11	10	9	8	7	6	5	4	3	2	1	0
Name	TX_BASE_PTR[15:0]															
Type	RW															
Reset	0	0	0	0	0	0	0	0	0	0	0	0	0	0	0	0

Bit(s)	Name	Description
31:0	TX_BASE_PTR	**Point to the base address of TX Ring #0 (4-DW aligned address)**

FOR MEDIATEK CONFIDENTIAL USE ONLY
fariwang@symtex.com.tw

This document contains information that is proprietary to MediaTek Inc.
Unauthorized reproduction or disclosure of this information in whole or in part is strictly prohibited.

10100834 **TX_MAX_CNT_3** **TX Ring #3 Maximum Count** **00000000**

Bit	31	30	29	28	27	26	25	24	23	22	21	20	19	18	17	16
Name																
Type																
Reset																
Bit	15	14	13	12	11	10	9	8	7	6	5	4	3	2	1	0
Name					TX_MAX_CNT											
Type					RW											
Reset					0	0	0	0	0	0	0	0	0	0	0	0

Bit(s)	Name	Description
11:0	TX_MAX_CNT	**The maximum number of TXD count in TX Ring #0**

10100838 **TX_CTX_IDX_3** **TX Ring #3 CPU pointer** **00000000**

Bit	31	30	29	28	27	26	25	24	23	22	21	20	19	18	17	16
Name																
Type																
Reset																
Bit	15	14	13	12	11	10	9	8	7	6	5	4	3	2	1	0
Name					TX_CTX_IDX											
Type					RW											
Reset					0	0	0	0	0	0	0	0	0	0	0	0

Bit(s)	Name	Description
11:0	TX_CTX_IDX	**Point to the next TXD CPU wants to use**

1010083C **TX_DTX_IDX_3** **TX Ring #3 DMA poitner** **00000000**

Bit	31	30	29	28	27	26	25	24	23	22	21	20	19	18	17	16
Name																
Type																
Reset																
Bit	15	14	13	12	11	10	9	8	7	6	5	4	3	2	1	0
Name					TX_DTX_IDX											
Type					RO											
Reset					0	0	0	0	0	0	0	0	0	0	0	0

Bit(s)	Name	Description
11:0	TX_DTX_IDX	**Point to the next TXD DMA wants to use**

10100900 **RX_BASE_PTR_0** **RX Ring #0 Base Pointer** **00000000**

Bit	31	30	29	28	27	26	25	24	23	22	21	20	19	18	17	16
Name	RX_BASE_PTR[31:16]															
Type	RW															
Reset	0	0	0	0	0	0	0	0	0	0	0	0	0	0	0	0
Bit	15	14	13	12	11	10	9	8	7	6	5	4	3	2	1	0

MEDIATEK CONFIDENTIAL
FOR forwarding@symnex.com.tw USE ONLY

This document contains information that is proprietary to MediaTek Inc.
Unauthorized reproduction or disclosure of this information in whole or in part is strictly prohibited.

Name	RX_BASE_PTR[15:0]															
Type	RW															
Reset	0	0	0	0	0	0	0	0	0	0	0	0	0	0	0	0

Bit(s)	Name	Description
31:0	RX_BASE_PTR	**Point to the base address of RX Ring #0 (4-DW aligned address)**

10100904 RX_MAX_CNT_0 RX Ring #0 Maximum Count 00000000

Bit	31	30	29	28	27	26	25	24	23	22	21	20	19	18	17	16
Name																
Type																
Reset																
Bit	15	14	13	12	11	10	9	8	7	6	5	4	3	2	1	0
Name					TX_MAX_CNT											
Type					RW											
Reset					0	0	0	0	0	0	0	0	0	0	0	0

Bit(s)	Name	Description
11:0	TX_MAX_CNT	**The maximum number of RXD count in RX Ring #0**

10100908 RX_CRX_IDX_0 RX Ring #0 CPU pointer 00000000

Bit	31	30	29	28	27	26	25	24	23	22	21	20	19	18	17	16
Name																
Type																
Reset																
Bit	15	14	13	12	11	10	9	8	7	6	5	4	3	2	1	0
Name					TX_CTX_IDX											
Type					RW											
Reset					0	0	0	0	0	0	0	0	0	0	0	0

Bit(s)	Name	Description
11:0	TX_CTX_IDX	**Point to the next RXD CPU wants to use**

1010090C RX_DRX_IDX_0 RX Ring #0 DMA poitner 00000000

Bit	31	30	29	28	27	26	25	24	23	22	21	20	19	18	17	16
Name																
Type																
Reset																
Bit	15	14	13	12	11	10	9	8	7	6	5	4	3	2	1	0
Name					RX_DRX_IDX											
Type					RO											
Reset					0	0	0	0	0	0	0	0	0	0	0	0

Bit(s)	Name	Description
11:0	RX_DRX_IDX	**Point to the next RXD DMA wants to use**

MEDIATEK CONFIDENTIAL
FOR fartwang@symnex.com.tw USE ONLY

This document contains information that is proprietary to MediaTek Inc.
Unauthorized reproduction or disclosure of this information in whole or in part is strictly prohibited.

10100910 RX_BASE_PTR_1 RX Ring #1 Base Pointer 00000000

Bit	31	30	29	28	27	26	25	24	23	22	21	20	19	18	17	16
Name	RX_BASE_PTR[31:16]															
Type	RW															
Reset	0	0	0	0	0	0	0	0	0	0	0	0	0	0	0	0
Bit	15	14	13	12	11	10	9	8	7	6	5	4	3	2	1	0
Name	RX_BASE_PTR[15:0]															
Type	RW															
Reset	0	0	0	0	0	0	0	0	0	0	0	0	0	0	0	0

Bit(s)	Name	Description
31:0	RX_BASE_PTR	**Point to the base address of RX Ring #0 (4-DW aligned address)**

10100914 RX_MAX_CNT_1 RX Ring #1 Maximum Count 00000000

Bit	31	30	29	28	27	26	25	24	23	22	21	20	19	18	17	16
Name																
Type																
Reset																
Bit	15	14	13	12	11	10	9	8	7	6	5	4	3	2	1	0
Name					TX_MAX_CNT											
Type					RW											
Reset					0	0	0	0	0	0	0	0	0	0	0	0

Bit(s)	Name	Description
11:0	TX_MAX_CNT	**The maximum number of RXD count in RX Ring #0**

10100918 RX_CRX_IDX_1 RX Ring #1 CPU pointer 00000000

Bit	31	30	29	28	27	26	25	24	23	22	21	20	19	18	17	16
Name																
Type																
Reset																
Bit	15	14	13	12	11	10	9	8	7	6	5	4	3	2	1	0
Name					TX_CTX_IDX											
Type					RW											
Reset					0	0	0	0	0	0	0	0	0	0	0	0

Bit(s)	Name	Description
11:0	TX_CTX_IDX	**Point to the next RXD CPU wants to use**

1010091C RX_DRX_IDX_1 RX Ring #1 DMA poitner 00000000

Bit	31	30	29	28	27	26	25	24	23	22	21	20	19	18	17	16
Name																
Type																
Reset																
Bit	15	14	13	12	11	10	9	8	7	6	5	4	3	2	1	0
Name					RX_DRX_IDX											
Type					RO											

MEDIATEK CONFIDENTIAL
FOR fae.twang@symnex.com.tw USE ONLY

This document contains information that is proprietary to MediaTek Inc.
Unauthorized reproduction or disclosure of this information in whole or in part is strictly prohibited.

Reset					0	0	0	0	0	0	0	0	0	0	0	0

Bit(s)	Name	Description
11:0	RX_DRX_IDX	**Point to the next RXD DMA wants to use**

10100A00 **PDMA_INFO** **PDMA Information** **1C000204**

Bit	31	30	29	28	27	26	25	24	23	22	21	20	19	18	17	16
Name					**INDEX_WIDTH**				**BASE_PTR_WIDTH**							
Type					RO				RO							
Reset					1	1	0	0	0	0	0	0	0	0	0	0
Bit	15	14	13	12	11	10	9	8	7	6	5	4	3	2	1	0
Name	**RX_RING_NUM**								**TX_RING_NUM**							
Type	RO								RO							
Reset	0	0	0	0	0	0	1	0	0	0	0	0	0	1	0	0

Bit(s)	Name	Description
27:24	INDEX_WIDTH	**Point to the next RXD CPU wants to use**
23:16	BASE_PTR_WIDTH	**Base pointer width, x** Base_addr[31:32-x] is shared with all ring base adderss. Only ring #0 base address[31:32-x] field Is writabl. [note]: "0" means no bit of base_address is shared.
15:8	RX_RING_NUM	**Rx ring number**
7:0	TX_RING_NUM	**Tx ring number**

10100A04 **PDMA_GLO_CFG** **PDMA Global Configuration** **00000050**

Bit	31	30	29	28	27	26	25	24	23	22	21	20	19	18	17	16
Name			**HDR_SEG_LEN**													
Type			RW													
Reset			0	0	0	0	0	0	0	0	0	0	0	0	0	0
Bit	15	14	13	12	11	10	9	8	7	6	5	4	3	2	1	0
Name									**BIG_ENDIAN**	**TX_WB_DDONE**	**PDMA_BT_SIZE**		**RX_DMA_BUSY**	**RX_DMA_EN**	**TX_DMA_BUSY**	**TX_DMA_EN**
Type									RW	RW	RW		RO	RW	RO	RW
Reset									0	1	0	1	0	0	0	0

Bit(s)	Name	Description
29:16	HDR_SEG_LEN	**Header Segment Length** Specify the header segment size in byte to supoprt RX header/payload scattering fucntion, when set to a non-zero value. When set to zero, the header/payload scattering feature is disabled.
7	BIG_ENDIAN	**Big endian** 0: PDMA will not do byte swapping for TX/RX packet header and payload 1: PDMA will do byte swaping for TX/RX packet header and payload
6	TX_WB_DDONE	0: Disable TX_DMA writing back DDONE into TXD 1: Enable TX_DMA writing back DDONE into TXD
5:4	PDMA_BT_SIZE	**The burst size of PDMA** 0: 4 DWORDs (16-bytes) 1: 8 DWORDs (32-bytes)

MEDIATEK CONFIDENTIAL
FOR fari.wang@symnex.com.tw USE ONLY

This document contains information that is proprietary to MediaTek Inc.
Unauthorized reproduction or disclosure of this information in whole or in part is strictly prohibited.

Bit(s)	Name	Description
		2: 16 DWORDs (64-bytes) 3: Reserved
3	RX_DMA_BUSY	0: RX_DMA is not busy 1: RX_DMA is busy
2	RX_DMA_EN	0: Diable RX_DMA (when disabled, RX_DMA will finish the current receiving packet, then stop) 1: Enable RX_DMA
1	TX_DMA_BUSY	0: TX_DMA is not busy 1: TX_DMA is busy
0	TX_DMA_EN	0: Disable TX_DMA (when disabled, TX_DMA will finish the current sending packet, then stop) 1: Enable TX_DMA

10100A0C **DELAY_INT_CFG** **Delay Interrupt Configuration** **00000000**

Bit	31	30	29	28	27	26	25	24	23	22	21	20	19	18	17	16
Name	TXDLY_INT_EN	TXMAX_PINT							TXMAX_PTIME							
Type	RW	RW							RW							
Reset	0	0	0	0	0	0	0	0	0	0	0	0	0	0	0	0
Bit	15	14	13	12	11	10	9	8	7	6	5	4	3	2	1	0
Name	RXDLY_INT_EN	RXMAX_PINT							RXMAX_PTIME							
Type	RW	RW							RW							
Reset	0	0	0	0	0	0	0	0	0	0	0	0	0	0	0	0

Bit(s)	Name	Description
31	TXDLY_INT_EN	**Delay interrupt mechanism** 0: Disable TX delayed interrupt mechanism 1: Enable Tx delayed interrupt mechanism
30:24	TXMAX_PINT	**Specified Max. number of pended interrupts** When the number of pended interrupts is equal or greater than the value specified here or interupt pending time reach the limit (see below), an final TX_DLY_INT is generated. [Note] reset to 0 can disable pending interrupt count check.
23:16	TXMAX_PTIME	**Specified Max. pended time** When the pending time is equal or greater than TXMAX_PTIME x 20us or the number of pended TX_DONE is equal or greater than TXMAX_PINT 9see above), an final TX_DLY_INT is generated. [Note] reset to 0 can disable pending interrupt time check.
15	RXDLY_INT_EN	0: Disable Rx delayed interrupt mechanism 1: Enable Rx delayed interrupt mechanism
14:8	RXMAX_PINT	**Specified Max. number of pended interrupts** When the number of pended interrupts is equal or greater than the value specified here or interupt pending time reach the limit (see below), an final RX_DLY_INT is generated. [Note] reset to 0 can disable pending interrupt count check.
7:0	RXMAX_PTIME	**Specified Max. pended time** When the pending time is equal or greater than RXMAX_PTIME x 20us or the

MEDIATEK CONFIDENTIAL
FOR farrwang@symnex.com.tw USE ONLY

This document contains information that is proprietary to MediaTek Inc.
Unauthorized reproduction or disclosure of this information in whole or in part is strictly prohibited.

Bit(s)	Name	Description
		number of pended RX_DONE is equal or greater than RXMAX_PINT 9see above), an finalRX_DLY_INT is generated. [Note] reset to 0 can disable pending interrupt time check.

10100A10 **FREEQ_THRES** **Free Queue Threshold** **00000002**

Bit	31	30	29	28	27	26	25	24	23	22	21	20	19	18	17	16
Name																
Type																
Reset																
Bit	15	14	13	12	11	10	9	8	7	6	5	4	3	2	1	0
Name													FREEQ_THRES			
Type													RW			
Reset													0	0	1	0

Bit(s)	Name	Description
3:0	FREEQ_THRES	**Rx free queue threshold** PDMA will stop DMA interface when left RX descriptors reach this threshold

10100A20 **INT_STATUS** **Interrupt Status** **00000000**

Bit	31	30	29	28	27	26	25	24	23	22	21	20	19	18	17	16
Name	RX_COHERENT	RX_DLY_INT	TX_COHERENT	TX_DLY_INT											RX_DONE_INT1	RX_DONE_INT0
Type	W1C	W1C	W1C	W1C											W1C	W1C
Reset	0	0	0	0											0	0
Bit	15	14	13	12	11	10	9	8	7	6	5	4	3	2	1	0
Name													TX_DONE_INT3	TX_DONE_INT2	TX_DONE_INT1	TX_DONE_INT0
Type													W1C	W1C	W1C	W1C
Reset													0	0	0	0

Bit(s)	Name	Description
31	RX_COHERENT	**RX_DMA finds data coherent event while checking ddone bit.**
30	RX_DLY_INT	**Summary of the whole PDMA Rx related interrupts.**
29	TX_COHERENT	**TX_DMA finds data coherent event while checking ddone bit.**
28	TX_DLY_INT	**Summary of the whole PDMA Tx related interrupts.**
17	RX_DONE_INT1	**Rx ring #1 packet receive interrupt**
16	RX_DONE_INT0	**Rx ring #0 packet receive interrupt**
3	TX_DONE_INT3	**Tx ring #3 packet transmit interrupt**
2	TX_DONE_INT2	**Tx ring #2 packet transmit interrupt**
1	TX_DONE_INT1	**Tx ring #1 packet transmit interrupt**
0	TX_DONE_INT0	**Tx ring #0 packet transmit interrupt**

MEDIATEK CONFIDENTIAL
FOR chiwang@synnex.com.tw USE ONLY

This document contains information that is proprietary to MediaTek Inc.
Unauthorized reproduction or disclosure of this information in whole or in part is strictly prohibited.

10100A28 **INT_MASK** **Interrupt Mask** **00000000**

Bit	31	30	29	28	27	26	25	24	23	22	21	20	19	18	17	16
Name	RX_COHERENT	RX_DLY_INT	TX_COHERENT	TX_DLY_INT											RX_DONE_INT1	RX_DONE_INT0
Type	RW	RW	RW	RW											RW	RW
Reset	0	0	0	0											0	0
Bit	15	14	13	12	11	10	9	8	7	6	5	4	3	2	1	0
Name													TX_DONE_INT3	TX_DONE_INT2	TX_DONE_INT1	TX_DONE_INT0
Type													RW	RW	RW	RW
Reset													0	0	0	0

Bit(s)	Name	Description
31	RX_COHERENT	**Interrupt enable for RX_DMA data coherent vent** 0: Disable interrupt 1: Enable interrupt
30	RX_DLY_INT	**Summary of the whole PDMA Rx related interrupts.** 0: Disable interrupt 1: Enable interrupt
29	TX_COHERENT	**Interrupt enable for TX_DMA data coherent vent** 0: Disable interrupt 1: Enable interrupt
28	TX_DLY_INT	**Summary of the whole PDMA Tx related interrupts.** 0: Disable interrupt 1: Enable interrupt
17	RX_DONE_INT1	**Rx ring #1 packet receive interrupt** 0: Disable interrupt 1: Enable interrupt
16	RX_DONE_INT0	**Rx ring #0 packet receive interrupt** 0: Disable interrupt 1: Enable interrupt
3	TX_DONE_INT3	**Tx ring #3 packet transmit interrupt** 0: Disable interrupt 1: Enable interrupt
2	TX_DONE_INT2	**Tx ring #2 packet transmit interrupt** 0: Disable interrupt 1: Enable interrupt
1	TX_DONE_INT1	**Tx ring #1 packet transmit interrupt** 0: Disable interrupt 1: Enable interrupt
0	TX_DONE_INT0	**Tx ring #0 packet transmit interrupt** 0: Disable interrupt 1: Enable interrupt

10100A80 **PDMA_SCH** **Scheduler Configuration for Q0&Q1** **00000000**

MEDIATEK CONFIDENTIAL
FOR fariwang@swinex.com.tw USE ONLY

This document contains information that is proprietary to MediaTek Inc.
Unauthorized reproduction or disclosure of this information in whole or in part is strictly prohibited.

Bit	31	30	29	28	27	26	25	24	23	22	21	20	19	18	17	16
Name							SCH_MODE									
Type							RW									
Reset							0	0								
Bit	15	14	13	12	11	10	9	8	7	6	5	4	3	2	1	0
Name																
Type																
Reset																

Bit(s)	Name	Description
25:24	SCH_MODE	**Scheduling Mode** 00: WRR 01: Strict priority, Q3>Q2,Q1>Q0 10: Mixed mode, Q3>WRR(Q2,Q1,Q0) 11: Mixed mode, Q3>Q2>WRR(Q1,Q0)

10100A84 PDMA_WRR Scheduler Configuration for Q2&Q3 00000000

Bit	31	30	29	28	27	26	25	24	23	22	21	20	19	18	17	16
Name																
Type																
Reset																
Bit	15	14	13	12	11	10	9	8	7	6	5	4	3	2	1	0
Name		SCH_WT_Q3				SCH_WT_Q2				SCH_WT_Q1				SCH_WT_Q0		
Type		RW				RW				RW				RW		
Reset		0	0	0		0	0	0		0	0	0		0	0	0

Bit(s)	Name	Description
14:12	SCH_WT_Q3	**Scheduling Weight of TX Q3**
10:8	SCH_WT_Q2	**Scheduling Weight of TX Q2**
6:4	SCH_WT_Q1	**Scheduling Weight of TX Q1**
2:0	SCH_WT_Q0	**Scheduling Weight of TX Q0**

10100C00 SDM_CON Switch DMA Control 00078100

Bit	31	30	29	28	27	26	25	24	23	22	21	20	19	18	17	16
Name	REV0								PDMA_FC	PORT_MAP	LOOP_EN	TCO_81xx	UN_DROP_EN	UDPCS	TCPCS	IPCS
Type	RO								RW	RW	RW	RW	RW	RW	RW	RW
Reset	0	0	0	0	0	0	0	0	0	0	0	0	0	1	1	1
Bit	15	14	13	12	11	10	9	8	7	6	5	4	3	2	1	0
Name	EXT_VLAN															
Type	RW															
Reset	1	0	0	0	0	0	0	1	0	0	0	0	0	0	0	0

Bit(s)	Name	Description
31:24	REV0	**Reserved**
23	PDMA_FC	**TX PDMA Flow Cotnrol Enable** When this bit is set, the downstream fow control is enabled on PDMA 4 TX Ring (SDM_TRGING)

MEDIATEK CONFIDENTIAL
FOR fairwang@symnex.com.tw USE ONLY

This document contains information that is proprietary to MediaTek Inc.
Unauthorized reproduction or disclosure of this information in whole or in part is strictly prohibited.

Bit(s)	Name	Description
		0: Disable 1: Enable
22	PORT_MAP	**RX Ring Selection** The received frame will be collected into the corresponding PDMA RX Ring based on the source port priority tag. 0: Priority Tag (SDMRRING[7:0]) 1: Source Port (SDM_RRING[12:8])
21	LOOP_EN	**Frame Engine Loop-back Mode Enable**
20	TCO_81xx	**Special tag Recongization Enable** When this bit is set, PDI(0x81xx) is recognized by the first byte (0x81) only. The second byte could be used for the specilqa purpose like the incoming source port.
19	UN_DROP_EN	**Drop Unknonwn MAC Address** 0: Disable 1: Enable
18	UDPCS	**UDP Packet Checksum RX Offload Enable** 0: disable, checksum result is showed on RX descriptor 1: enable, drop checksum error packet
17	TCPCS	**TCP Packet Checksum RX Offload Enable** 0: disable, checksum result is showed on RX descriptor 1: enable, drop checksum error packet
16	IPCS	**IP Header Checksum RX Offload Enable** 0: disable, checksum result is showed on RX descriptor 1: enable, drop checksum error packet
15:0	EXT_VLAN	**Outer VLAN Protocol ID** The specific vlaue is used to recognize the outer VLAN protocol ID only. Per inner VLAN or the general VLAN-tagged frame, the value PID=0x8100 is the uniqe protocol ID.

10100C04 **SDM_RING** **Switch DMA Rx Ring** **00000000**

Bit	31	30	29	28	27	26	25	24	23	22	21	20	19	18	17	16
Name	REV0												QUE3_RING_FC	QUE2_RING_FC	QUE1_RING_FC	QUE0_RING_FC
Type	RO												RW	RW	RW	RW
Reset	0	0	0	0	0	0	0	0	0	0	0	0	0	0	0	0
Bit	15	14	13	12	11	10	9	8	7	6	5	4	3	2	1	0
Name				PORT4_RING	PORT3_RING	PORT2_RING	PORT1_RING	PORT0_RING	PRI7_RING	PRI6_RING	PRI5_RING	PRI4_RING	PRI3_RING	PRI2_RING	PRI1_RING	PRI10_RING
Type				RW	RW	RW	RW	RW	RW	RW	RW	RW	RW	RW	RW	RW
Reset				0	0	0	0	0	0	0	0	0	0	0	0	0

Bit(s)	Name	Description
31:20	REV0	**Reserved**
19	QUE3_RING_FC	**Pause Switch Queue 3 by RX Ring##** When RX Ring# reaches the reserved free threshold(FREEQ_THRES), the queue 3 to CPU will be paused. 1: RX Ring #0 0: RX Ring #1

MEDIATEK CONFIDENTIAL
FOR farwang@symtx.com.tw USE ONLY

This document contains information that is proprietary to MediaTek Inc.
Unauthorized reproduction or disclosure of this information in whole or in part is strictly prohibited.

Bit(s)	Name	Description
18	QUE2_RING_FC	**Pause Switch Queue 2 by RX Ring##** When RX Ring# reaches the reserved free threshold(FREEQ_THRES), the queue 3 to CPU will be paused. 1: RX Ring #0 0: RX Ring #1
17	QUE1_RING_FC	**Pause Switch Queue 1 by RX Ring##** When RX Ring# reaches the reserved free threshold(FREEQ_THRES), the queue 3 to CPU will be paused. 1: RX Ring #0 0: RX Ring #1
16	QUE0_RING_FC	**Pause Switch Queue 0 by RX Ring##** When RX Ring# reaches the reserved free threshold(FREEQ_THRES), the queue 3 to CPU will be paused. 1: RX Ring #0 0: RX Ring #1
12	PORT4_RING	**Source Port 4 to RX Ring##** The received frames from the source port 4 will be sent to RX Ring# [Note] To use the source port, the special tag between FE and SW should be enabled. 1: RX Ring #0 0: RX Ring #1
11	PORT3_RING	**Source Port 3 to RX Ring##** The received frames from the source port 4 will be sent to RX Ring# [Note] To use the source port, the special tag between FE and SW should be enabled. 1: RX Ring #0 0: RX Ring #1
10	PORT2_RING	**Source Port 2 to RX Ring##** The received frames from the source port 4 will be sent to RX Ring# [Note] To use the source port, the special tag between FE and SW should be enabled. 1: RX Ring #0 0: RX Ring #1
9	PORT1_RING	**Source Port 1 to RX Ring##** The received frames from the source port 4 will be sent to RX Ring# [Note] To use the source port, the special tag between FE and SW should be enabled. 1: RX Ring #0 0: RX Ring #1
8	PORT0_RING	**Source Port 0 to RX Ring##** The received frames from the source port 4 will be sent to RX Ring# [Note] To use the source port, the special tag between FE and SW should be enabled. 1: RX Ring #0 0: RX Ring #1
7	PRI7_RING	**Priority 7 to RX Ring##** The received frames with priority tag 7 will be sent to RX Ring# 1: RX Ring #0 0: RX Ring #1
6	PRI6_RING	**Priority 6 to RX Ring##** The received frames with priority tag 6 will be sent to RX Ring# 1: RX Ring #0 0: RX Ring #1
5	PRI5_RING	**Priority 5 to RX Ring##** The received frames with priority tag 5 will be sent to RX Ring# 1: RX Ring #0

MEDIATEK CONFIDENTIAL
FOR fairwanec@wmtex.com.tw USE ONLY

This document contains information that is proprietary to MediaTek Inc.
Unauthorized reproduction or disclosure of this information in whole or in part is strictly prohibited.

Bit(s)	Name	Description
		0: RX Ring #1
4	PRI4_RING	**Priority 4 to RX Ring##** The received frames with priority tag 4 will be sent to RX Ring# 1: RX Ring #0 0: RX Ring #1
3	PRI3_RING	**Priority 3 to RX Ring##** The received frames with priority tag 3 will be sent to RX Ring# 1: RX Ring #0 0: RX Ring #1
2	PRI2_RING	**Priority 2 to RX Ring##** The received frames with priority tag 2 will be sent to RX Ring# 1: RX Ring #0 0: RX Ring #1
1	PRI1_RING	**Priority 1to RX Ring##** The received frames with priority tag 1 will be sent to RX Ring# 1: RX Ring #0 0: RX Ring #1
0	PRI10_RING	**Priority 0 to RX Ring##** The received frames with priority tag 0 will be sent to RX Ring# 1: RX Ring #0 0: RX Ring #1

10100C08 **SDM_TRING** **Switch DMA TX Ring** **00000000**

Bit	31	30	29	28	27	26	25	24	23	22	21	20	19	18	17	16
Name	RING3_WAN_FC				RING2_WAN_FC				RING1_WAN_FC				RING0_WAN_FC			
Type	RW				RW				RW				RW			
Reset	0	0	0	0	0	0	0	0	0	0	0	0	0	0	0	0
Bit	15	14	13	12	11	10	9	8	7	6	5	4	3	2	1	0
Name	RING3_LAN_FC				RING2_LAN_FC				RING1_LAN_FC				RING0_LAN_FC			
Type	RW				RW				RW				RW			
Reset	0	0	0	0	0	0	0	0	0	0	0	0	0	0	0	0

Bit(s)	Name	Description
31:28	RING3_WAN_FC	**Pause TX Ring 3 by WAN Port** TX Ring# will be paused when the corresponding switch egress queue on WAN port is congested. Bit.3: WAN port Queue#3 Bit.2: WAN port Queue#2 Bit.1: WAN port Queue#1 Bit.0: WAN port Queue#0
27:24	RING2_WAN_FC	**Pause TX Ring 2 by WAN Port** TX Ring# will be paused when the corresponding switch egress queue on WAN port is congested. Bit.3: WAN port Queue#3 Bit.2: WAN port Queue#2 Bit.1: WAN port Queue#1 Bit.0: WAN port Queue#0
23:20	RING1_WAN_FC	**Pause TX Ring 1 by WAN Port** TX Ring# will be paused when the corresponding switch egress queue on WAN port is congested. Bit.3: WAN port Queue#3 Bit.2: WAN port Queue#2 Bit.1: WAN port Queue#1

MEDIATEK CONFIDENTIAL
FOR farrwang@symtex.com.tw USE ONLY

This document contains information that is proprietary to MediaTek Inc.
Unauthorized reproduction or disclosure of this information in whole or in part is strictly prohibited.

Bit(s)	Name	Description
		Bit.0: WAN port Queue#0
19:16	RING0_WAN_FC	**Pause TX Ring 0 by WAN Port** TX Ring# will be paused when the corresponding switch egress queue on WAN port is congested. Bit.3: WAN port Queue#3 Bit.2: WAN port Queue#2 Bit.1: WAN port Queue#1 Bit.0: WAN port Queue#0
15:12	RING3_LAN_FC	**Pause TX Ring 3 by LAN Port** TX Ring# will be paused when the corresponding switch egress queue on WAN port is congested. Bit.3: LAN port Queue#3 Bit.2: LAN port Queue#2 Bit.1: LAN port Queue#1 Bit.0: LAN port Queue#0
11:8	RING2_LAN_FC	**Pause TX Ring 2 by LAN Port** TX Ring# will be paused when the corresponding switch egress queue on WAN port is congested. Bit.3: LAN port Queue#3 Bit.2: LAN port Queue#2 Bit.1: LAN port Queue#1 Bit.0: LAN port Queue#0
7:4	RING1_LAN_FC	**Pause TX Ring 1 by LAN Port** TX Ring# will be paused when the corresponding switch egress queue on WAN port is congested. Bit.3: LAN port Queue#3 Bit.2: LAN port Queue#2 Bit.1: LAN port Queue#1 Bit.0: LAN port Queue#0
3:0	RING0_LAN_FC	**Pause TX Ring 0 by LAN Port** TX Ring# will be paused when the corresponding switch egress queue on WAN port is congested. Bit.3: LAN port Queue#3 Bit.2: LAN port Queue#2 Bit.1: LAN port Queue#1 Bit.0: LAN port Queue#0

10100C0C **SDM_MAC_ADRL** **Switch MAC Address LSB** **00000000**

Bit	31	30	29	28	27	26	25	24	23	22	21	20	19	18	17	16
Name	MAC_ADDR_LSB[31:16]															
Type	RW															
Reset	0	0	0	0	0	0	0	0	0	0	0	0	0	0	0	0
Bit	15	14	13	12	11	10	9	8	7	6	5	4	3	2	1	0
Name	MAC_ADDR_LSB[15:0]															
Type	RW															
Reset	0	0	0	0	0	0	0	0	0	0	0	0	0	0	0	0

Bit(s)	Name	Description
31:0	MAC_ADDR_LSB	**MAC Address bit[31:0]**

10100C10 **SDM_MAC_ADRH** **Switch MAC Address MSB** **00000000**

MEDIATEK CONFIDENTIAL
FOR fairwang@sunrex.com.tw USE ONLY

This document contains information that is proprietary to MediaTek Inc.
Unauthorized reproduction or disclosure of this information in whole or in part is strictly prohibited.

Bit	31	30	29	28	27	26	25	24	23	22	21	20	19	18	17	16
Name																
Type																
Reset																
Bit	15	14	13	12	11	10	9	8	7	6	5	4	3	2	1	0
Name	MAC_ADDR_MSB															
Type	RW															
Reset	0	0	0	0	0	0	0	0	0	0	0	0	0	0	0	0

Bit(s)	Name	Description
15:0	MAC_ADDR_MSB	**MAC Address bit[47:32]**

10100D00 SDM_TPCNT Switch DMA Tx Packet Count 00000000

Bit	31	30	29	28	27	26	25	24	23	22	21	20	19	18	17	16
Name	TX_PCNT[31:16]															
Type	RC															
Reset	0	0	0	0	0	0	0	0	0	0	0	0	0	0	0	0
Bit	15	14	13	12	11	10	9	8	7	6	5	4	3	2	1	0
Name	TX_PCNT[15:0]															
Type	RC															
Reset	0	0	0	0	0	0	0	0	0	0	0	0	0	0	0	0

Bit(s)	Name	Description
31:0	TX_PCNT	**Transmit Packet Count**

10100D04 SDM_TBCNT Switch DMA TX Byte Count 00000000

Bit	31	30	29	28	27	26	25	24	23	22	21	20	19	18	17	16
Name	TX_BCNT[31:16]															
Type	RC															
Reset	0	0	0	0	0	0	0	0	0	0	0	0	0	0	0	0
Bit	15	14	13	12	11	10	9	8	7	6	5	4	3	2	1	0
Name	TX_BCNT[15:0]															
Type	RC															
Reset	0	0	0	0	0	0	0	0	0	0	0	0	0	0	0	0

Bit(s)	Name	Description
31:0	TX_BCNT	**Transmit Byte Count**

10100D08 SDM_RPCNT Switch DMA RX Packet Count 00000000

Bit	31	30	29	28	27	26	25	24	23	22	21	20	19	18	17	16
Name	RX_PCNT[31:16]															
Type	RC															
Reset	0	0	0	0	0	0	0	0	0	0	0	0	0	0	0	0
Bit	15	14	13	12	11	10	9	8	7	6	5	4	3	2	1	0
Name	RX_PCNT[15:0]															
Type	RC															
Reset	0	0	0	0	0	0	0	0	0	0	0	0	0	0	0	0

Bit(s)	Name	Description

FOR MEDIATEK CONFIDENTIAL USE ONLY
fairwang@symnex.com.tw

This document contains information that is proprietary to MediaTek Inc.
Unauthorized reproduction or disclosure of this information in whole or in part is strictly prohibited.

Bit(s)	Name	Description
31:0	RX_PCNT	**Receive Packet Count**

10100D0C SDM_RBCNT Switch DMA RX Byte Count 00000000

Bit	31	30	29	28	27	26	25	24	23	22	21	20	19	18	17	16
Name	RX_BCNT[31:16]															
Type	RC															
Reset	0	0	0	0	0	0	0	0	0	0	0	0	0	0	0	0
Bit	15	14	13	12	11	10	9	8	7	6	5	4	3	2	1	0
Name	RX_BCNT[15:0]															
Type	RC															
Reset	0	0	0	0	0	0	0	0	0	0	0	0	0	0	0	0

Bit(s)	Name	Description
31:0	RX_BCNT	**Receive Byte Count**

10100D10 SDM_CS_ERR Switch DMA RX Checksum Error 00000000

Bit	31	30	29	28	27	26	25	24	23	22	21	20	19	18	17	16
Name	CS_ERR_CNT[31:16]															
Type	RC															
Reset	0	0	0	0	0	0	0	0	0	0	0	0	0	0	0	0
Bit	15	14	13	12	11	10	9	8	7	6	5	4	3	2	1	0
Name	CS_ERR_CNT[15:0]															
Type	RC															
Reset	0	0	0	0	0	0	0	0	0	0	0	0	0	0	0	0

Bit(s)	Name	Description
31:0	CS_ERR_CNT	**Receive Checksum Error Count**

MEDIATEK CONFIDENTIAL
FOR farrwang@symmx.com.tw USE ONLY

This document contains information that is proprietary to MediaTek Inc.
Unauthorized reproduction or disclosure of this information in whole or in part is strictly prohibited.

2.19 Switch Controller

2.19.1 Registers

ESW Changes LOG

Revision	Date	Author	Change Log
0.1	2013/5/29	PeterCT WU	Initialization

Module name: ESW Base address: (+10110000h)

Address	Name	Width	Register Function
10110000	ISR	32	Interrupt Status
10110004	IMR	32	Interrupt Mask
10110008	FCT0	32	Flow Control Threshold 0
1011000C	FCT1	32	Flow Control Threshold 1
10110010	PFC0	32	Priority Flow Control 0
10110014	PFC1	32	Priority Flow Control 1
10110018	PFC2	32	Priority Flow Control 2
1011001C	GQS0	32	Global Queue Status 0
10110020	GQS1	32	Global Queue Status 1
10110024	ATS	32	Address Table Search
10110028	ATS0	32	Address Table Status 0
1011002C	ATS1	32	Address Table Status 1
10110030	ATS2	32	Address Table Status 2
10110034	WMAD0	32	WT_MAC_AD0
10110038	WMAD1	32	WT_MAC_AD1
1011003C	WMAD2	32	WT_MAC_AD2
10110040	PVIDC0	32	PVID Configuration 0
10110044	PVIDC1	32	PVID Configuration 1
10110048	PVIDC2	32	PVID Configuration 2
1011004C	PVIDC3	32	PVID Configuration 3
10110050	VLANI0	32	VLAN Identifier 0
10110054	VLANI1	32	VLAN Identifier 1
10110058	VLANI2	32	VLAN Identifier 2
1011005C	VLANI3	32	VLAN Identifier 3
10110060	VLANI4	32	VLAN Identifier 4
10110064	VLANI5	32	VLAN Identifier 5
10110068	VLANI6	32	VLAN Identifier 6
1011006C	VLANI7	32	VLAN Identifier 7
10110070	VMSC0	32	VLAN Member Port Configuration 0
10110074	VMSC1	32	VLAN Member Port Configuration 1
10110078	VMSC2	32	VLAN Member Port Configuration 2
1011007C	VMSC3	32	VLAN Member Port Configuration 3
10110080	POA	32	Port Ability Offset
10110084	FPA	32	Force Port4 - Port0 Ability
10110088	PTS	32	Port Status
1011008C	SOCPC	32	SoC Port Control

FOR MEDIATEK CONFIDENTIAL
ruiwang@sunnet.com.tw USE ONLY

This document contains information that is proprietary to MediaTek Inc.
Unauthorized reproduction or disclosure of this information in whole or in part is strictly prohibited.

10110090	POC0	32	Port Control 0
10110094	POC1	32	Port Control 1
10110098	POC2	32	Port Control 2
1011009C	SGC	32	Switch Global Control
101100A0	STRT	32	Switch Reset
101100A4	LEDP0	32	LED Port0
101100A8	LEDP1	32	LED Port1
101100AC	LEDP2	32	LED Port2
101100B0	LEDP3	32	LED Port3
101100B4	LEDP4	32	LED Port4
101100B8	WDTR	32	Watch Dog Trigger Reset
101100BC	DES	32	Debug Signal
101100C0	PCR0	32	PHY Control Register 0
101100C4	PCR1	32	PHY Control Register 1
101100C8	FPA1	32	Force P5P6 Ability
101100CC	FCT2	32	Flow Control Threshold 2
101100D0	QSS0	32	Queue Status 0
101100D4	QSS1	32	Queue Status 1
101100D8	DEC	32	Debug Control
101100DC	MTI	32	Memory Test Information
101100E0	PPC	32	Packet Counter
101100E4	SGC2	32	Switch Global Control 2
101100E8	P0PC	32	Port 0 Packet Counter
101100EC	P1PC	32	Port 1 Packet Counter
101100F0	P2PC	32	Port 2 Packet Counter
101100F4	P3PC	32	Port 3 Packet Counter
101100F8	P4PC	32	Port 4 Packet Counter
101100FC	P5PC	32	Port 5 Packet Counter
10110100	VUB0	32	VLAN Untag Block 0
10110104	VUB1	32	VLAN Untag Block 1
10110108	VUB2	32	VLAN Untag Block 2
1011010C	VUB3	32	VLAN Untag Block 3
10110110	BMU_CTRL	32	BC/MC/UN Rate Limit Control
10110114	BMU_LMT_NUM1	32	BC/MC/UN Rate Limit Frame Number
10110118	BMU_LMT_NUM2	32	BC/MC/UN Rate Limit Frame Number
1011011C	P01_ING_CTRL	32	Port 0&1 Ingress Rate Limit Control
10110120	P23_ING_CTRL	32	Port 2&3 Ingress Rate Limit Control
10110124	P45_ING_CTRL	32	Port 4&5 Ingress Rate Limit Control
10110128	P0_ING_THRES	32	Port 0 Ingress Rate Limit Threshold
1011012C	P1_ING_THRES	32	Port 1 Ingress Rate Limit Threshold
10110130	P2_ING_THRES	32	Port 2 Ingress Rate Limit Threshold
10110134	P3_ING_THRES	32	Port 3 Ingress Rate Limit Threshold
10110138	P4_ING_THRES	32	Port 4 Ingress Rate Limit Threshold

MEDIATEK CONFIDENTIAL
FOR [illegible]ng@[illegible].com.tw USE ONLY

This document contains information that is proprietary to MediaTek Inc.
Unauthorized reproduction or disclosure of this information in whole or in part is strictly prohibited.

1011013C	P5_ING_THRES	32	**Port 5 Ingress Rate Limit Threshold**
10110140	P01_EG_CTRL	32	**Port 0/1 Egress Rate Limit Control**
10110144	P23_EG_CTRL	32	**Port 2/3 Egress Rate Limit Control**
10110148	P45_EG_CTRL	32	**Port 4/5 Egress Rate Limit Control**
1011014C	PCRI	32	**Packet Counter Recycle Indication**
10110150	P0TPC	32	**Port 0 TX Packet Counter**
10110154	P1TPC	32	**Port 1 TX Packet Counter**
10110158	P2TPC	32	**Port 2 TX Packet Counter**
1011015C	P3TPC	32	**Port 3 TX Packet Counter**
10110160	P4TPC	32	**Port 4 TX Packet Counter**
10110164	P5TPC	32	**Port 5 TX Packet Counter**
10110168	LEDC	32	**LED Control**

10110000 **ISR** **Interrupt Status** **00000000**

Bit	31	30	29	28	27	26	25	24	23	22	21	20	19	18	17	16
Name	REV0		WATCHDOG1_TMR_EXPIRED	WATCHDOG0_TMR_EXPIRED	HAS_INTRUDER	PORT_ST_CHG	BC_STORM	MUST_DROP_LAN	GLOBAL_QUE_FULL			LAN_QUE_FULL_6	LAN_QUE_FULL_5	LAN_QUE_FULL_4	LAN_QUE_FULL_3	LAN_QUE_FULL_2
Type	RO		W1C	W1C	W1C	W1C	W1C	W1C	W1C			W1C	W1C	W1C	W1C	W1C
Reset	0	0	0	0	0	0	0	0	0			0	0	0	0	0
Bit	15	14	13	12	11	10	9	8	7	6	5	4	3	2	1	0
Name	LAN_QUE_FULL_1	LAN_QUE_FULL_0														
Type	W1C	W1C														
Reset	0	0														

Bit(s)	Name	Description
31:30	REV0	**Reserved**
29	WATCHDOG1_TMR_EXPIRED	**P5 no transmit packet alert.** This bit indicating that P5 don't transmit packet for 3 seconds when P5 need to transmit packet. Write one clear. [Note] This feature is only valid when port 5 Giga MAC is implemented.
28	WATCHDOG0_TMR_EXPIRED	**Abnormal Alert** This bit indicating that global queue block counts is less than buf_starvation_th for 3 seconds. Write one clear.
27	HAS_INTRUDER	**Intruder Alert** This bit indicating that an unsecured packet is coming into a secured port. Write one clear.
26	PORT_ST_CHG	**Port status change** Any port from link status change. Write one clear.
25	BC_STORM	**BC storm**

MEDIATEK CONFIDENTIAL
FOR fariwana@synnex.com.tw USE ONLY

This document contains information that is proprietary to MediaTek Inc.
Unauthorized reproduction or disclosure of this information in whole or in part is strictly prohibited.

Bit(s)	Name	Description
		The device is undergoing broadcast storm. Write one clear.
24	MUST_DROP_LAN	**Queue exhausted** The global queue is used up and all packets are dropped. Write one clear.
23	GLOBAL_QUE_FULL	**Global Queue Full.** Write one clear.
20	LAN_QUE_FULL_6	**Port 6 out queue full. Write one clear.** [Note]: This feature is only valid when port 5 Giga MAC is implemented.
19	LAN_QUE_FULL_5	**Port 5 out queue full. Write one clear.**
18	LAN_QUE_FULL_4	**Port 4 out queue full. Write one clear.**
17	LAN_QUE_FULL_3	**Port 3 out queue full. Write one clear.**
16	LAN_QUE_FULL_2	**Port 2 out queue full. Write one clear.**
15	LAN_QUE_FULL_1	**Port 1 out queue full. Write one clear.**
14	LAN_QUE_FULL_0	**Port 0 out queue full. Write one clear.**

10110004 **IMR** **Interrupt Mask** **FFFFFFFF**

Bit	31	30	29	28	27	26	25	24	23	22	21	20	19	18	17	16
Name			WATCHDOG1_TMR_EXPIRED	WATCHDOG0_TMR_EXPIRED	HAS_INTRUDER	PORT_ST_CHG	BC_STORM	MUST_DROP_LAN	GLOBAL_QUE_FULL	REV1		LAN_QUE_FULL_6	LAN_QUE_FULL_5	LAN_QUE_FULL_4	LAN_QUE_FULL_3	LAN_QUE_FULL_2
Type			RW	RW	RW	RW	RW	RW	RW	RW		RW	RW	RW	RW	RW
Reset			1	1	1	1	1	1	1	1	1	1	1	1	1	1
Bit	15	14	13	12	11	10	9	8	7	6	5	4	3	2	1	0
Name	LAN_QUE_FULL_1	LAN_QUE_FULL_0														
Type	RW	RW														
Reset	1	1														

Bit(s)	Name	Description
29	WATCHDOG1_TMR_EXPIRED	**P5 no transmit packet alert.** This bit indicating that P5 don't transmit packet for 3 seconds when P5 need to transmit packet. Write one clear. [Note]: This feature is only valid when port 5 Giga MAC is implemented.
28	WATCHDOG0_TMR_EXPIRED	**Abnormal Alert** This bit indicating that global queue block counts is less than buf_starvation_th for 3 seconds. Write one clear.
27	HAS_INTRUDER	**Intruder Alert** This bit indicating that an unsecured packet is coming into a secured port. Write one clear.
26	PORT_ST_CHG	**Port status change** Any port from link status change. Write one clear.
25	BC_STORM	**BC storm** The device is undergoing broadcast storm. Write one clear.

MEDIATEK CONFIDENTIAL
FOR farrwang@synnex.com.tw USE ONLY

This document contains information that is proprietary to MediaTek Inc.
Unauthorized reproduction or disclosure of this information in whole or in part is strictly prohibited.

Bit(s)	Name	Description
24	MUST_DROP_LAN	**Queue exhausted** The global queue is used up and all packets are dropped. Write one clear.
23	GLOBAL_QUE_FULL	**Global Queue Full.** Write one clear.
22:21	REV1	**Port 6 out queue full. Write one clear.** [Note]: This feature is only valid when port 5 Giga MAC is implemented.
20	LAN_QUE_FULL_6	**Port 6 out queue full. Write one clear.** [Note]: This feature is only valid when port 5 Giga MAC is implemented.
19	LAN_QUE_FULL_5	**Port 5 out queue full. Write one clear.**
18	LAN_QUE_FULL_4	**Port 4 out queue full. Write one clear.**
17	LAN_QUE_FULL_3	**Port 3 out queue full. Write one clear.**
16	LAN_QUE_FULL_2	**Port 2 out queue full. Write one clear.**
15	LAN_QUE_FULL_1	**Port 1 out queue full. Write one clear.**
14	LAN_QUE_FULL_0	**Port 0 out queue full. Write one clear.**

10110008 **FCT0** **Flow Control Threshold 0** **FFC86E5A**

Bit	31	30	29	28	27	26	25	24	23	22	21	20	19	18	17	16
Name	FC_RLS_TH								FC_SET_TH							
Type	RW								RW							
Reset	1	1	1	1	1	1	1	1	1	1	0	0	1	0	0	0
Bit	15	14	13	12	11	10	9	8	7	6	5	4	3	2	1	0
Name	DRO_RLS_TH								DROP_SET_TH							
Type	RW								RW							
Reset	0	1	1	0	1	1	1	0	0	1	0	1	1	0	1	0

Bit(s)	Name	Description
31:24	FC_RLS_TH	**Flow Control Release Threshold** Flow control will be disabled when the global queue block counts is greater than the release threshold
23:16	FC_SET_TH	**Flow Control Set Threshold** Flow control will be enabled when the global queue block counts is less than the set threshold
15:8	DRO_RLS_TH	**Drop Release Threshold** Switch will stop dropping packets when the global queue block counts is greater than the drop-release threshold
7:0	DROP_SET_TH	**Drop Set Threshold** Switch will start dropping packets when the global queue block counts is less than the drop-set threshold.

1011000C **FCT1** **Flow Control Threshold 1** **00000014**

Bit	31	30	29	28	27	26	25	24	23	22	21	20	19	18	17	16
Name																
Type																
Reset																
Bit	15	14	13	12	11	10	9	8	7	6	5	4	3	2	1	0
Name									PORT_TH							
Type									RW							

MEDIATEK CONFIDENTIAL
FOR fai.wang@symtex.com.tw USE ONLY

This document contains information that is proprietary to MediaTek Inc.
Unauthorized reproduction or disclosure of this information in whole or in part is strictly prohibited.

Reset									0	0	0	1	0	1	0	0

Bit(s)	Name	Description
7:0	PORT_TH	**Per Port Output Threshold** When the global queue reaches the flow control or drop threshold on register FCT0, per port output threshold will be checked to enable flow-control or packet-dop depending on per queue minimum reserved blocks of the register PFC2.

10110010 **PFC0** **Priority Flow Control 0** **0F000000**

Bit	31	30	29	28	27	26	25	24	23	22	21	20	19	18	17	16
Name					MTCC_LMT					TURN_OFF_FC						
Type					RW					RW						
Reset					1	1	1	1		0	0	0	0	0	0	0
Bit	15	14	13	12	11	10	9	8	7	6	5	4	3	2	1	0
Name	VO_NUM				CL_NUM				BE_NUM				BK_NUM			
Type	RW				RW				RW				RW			
Reset	0	0	0	0	0	0	0	0	0	0	0	0	0	0	0	0

Bit(s)	Name	Description
27:24	MTCC_LMT	**MTCC LIMIT** The maximum Back-off count limit to drop excessive collision packets.
22:16	TURN_OFF_FC	**Turn off FC When Receiving High Packet** Auto-turn-off FC when the programmed ports receive one of the highest priority packet. 0: DIsable 1: Enable
15:12	VO_NUM	**The proportional number of WRR for Voice Queue** After transmit exactly the number of packets then proceed to next queue. If equal to 0, only this queue is forced to the strict priority mode
11:8	CL_NUM	**The proportional number of WRR for Control-Load Queue** After transmit exactly the number of packet then proceed to next queue.
7:4	BE_NUM	**The proportional number of WRR for Best-Effort Queue** After transmit exactly the number of packet then proceed to next queue.
3:0	BK_NUM	**The proportional number of WRR for Background Queue After transmit exactly the number of packet then proceed to next queue.**

10110014 **PFC1** **Priority Flow Control 1** **00001555**

Bit	31	30	29	28	27	26	25	24	23	22	21	20	19	18	17	16
Name	CPU_USE_Q1_EN	EN_TOS							IGMP_TO_CPU	EN_VLAN						
Type	RW	RW							RW	RW						
Reset	0	0	0	0	0	0	0	0	0	0	0	0	0	0	0	0
Bit	15	14	13	12	11	10	9	8	7	6	5	4	3	2	1	0
Name	PRIORITY_OP		PORT_PRI 6		PORT_PRI 5		PORT_PRI 4		PORT_PRI 3		PORT_PRI 2		PORT_PRI 1		PORT_PRI 0	

MEDIATEK CONFIDENTIAL
FOR arrwang@sinnex.com.tw USE ONLY

This document contains information that is proprietary to MediaTek Inc.
Unauthorized reproduction or disclosure of this information in whole or in part is strictly prohibited.

	TION															
Type	RW		RW		RW		RW		RW		RW		RW		RW	
Reset	0		0	1	0	1	0	1	0	1	0	1	0	1	0	1

Bit(s)	Name	Description
31	CPU_USE_Q1_EN	**CPU Port only use q1 enable** 0: default priority resolution 1: packets forwarded to CPU port uses Best-Effor Queue
30:24	EN_TOS	**Port6 ~ port0 TOS_en.** Check TOS field of IP packets for priority resolution. [Note] Port 5 function is only vlaid when port 5 Giga MAC is implemented 0: Disable 1: Enable
23	IGMP_TO_CPU	**IGMP forward to CPU enable** 0: IGMP message will be floode to all ports 1: IGMP message will be forwarded to CPU port only.
22:16	EN_VLAN	**Enable per port VLAN-tag VID membership and priority tag check.** [Note] Port 5 function is only vlaid when port 5 Giga MAC is implemented 0: disable. 1: enable
15	PRIORITY_OPTION	**Priority Resolution Option** 0: 802.1p -> TOS -> Per port 1: TOS -> 802.1p -> Per port
13:12	PORT_PRI6	**Port priority** By setting this register to assign per port's default priority queue.
11:10	PORT_PRI5	**Port priority** By setting this register to assign per port's default priority queue. [Note] This feature is only valid when port 6 Giga MAC is implemented
9:8	PORT_PRI4	**Port priority** By setting this register to assign per port's default priority queue.
7:6	PORT_PRI3	**Port priority** By setting this register to assign per port's default priority queue.
5:4	PORT_PRI2	**Port priority** By setting this register to assign per port's default priority queue.
3:2	PORT_PRI1	**Port priority** By setting this register to assign per port's default priority queue.
1:0	PORT_PRI0	**Port priority** By setting this register to assign per port's default priority queue.

10110018 **PFC2** **Priority Flow Control 2** **03030303**

Bit	31	30	29	28	27	26	25	24	23	22	21	20	19	18	17	16
Name	PRI_TH_VO								PRI_TH_CL							
Type	RW								RW							
Reset	0	0	0	0	0	0	1	1	0	0	0	0	0	0	1	1
Bit	15	14	13	12	11	10	9	8	7	6	5	4	3	2	1	0
Name	PRI_TH_BE								PRI_TH_BK							
Type	RW								RW							
Reset	0	0	0	0	0	0	1	1	0	0	0	0	0	0	1	1

Bit(s)	Name	Description
31:24	PRI_TH_VO	**Voice Threshold (Highest Priority)**

FOR MEDIATEK CONFIDENTIAL
fanyang@synnex.com.tw USE ONLY

This document contains information that is proprietary to MediaTek Inc.
Unauthorized reproduction or disclosure of this information in whole or in part is strictly prohibited.

Bit(s)	Name	Description
		The minimum reserved packet block count which outout queue can store when the flow-control /drop threshold of registers FTC0 and FCT1 is reached. If the queued blocks exceed the threshold, the incoming packet will be paused or dropped.
23:16	PRI_TH_CL	**Control Load Threshold** The minimum reserved packet block count which outout queue can store when the flow-control/drop threshold of registers FTC0 and FCT1 is reached. If the queued blocks exceed the threshold, the incoming packet will be paused or dropped.
15:8	PRI_TH_BE	**Best Effort threshold** The minimum reserved packet block count which outout queue can store when the flow-control/drop threshold of registers FTC0 and FCT1 is reached. If the queued blocks exceed the threshold, the incoming packet will be paused or dropped.
7:0	PRI_TH_BK	**Background Threshold (Lowest Priority)** The minimum reserved packet block count which outout queue can store when the flow-control/drop threshold of registers FTC0 and FCT1 is reached. If the queued blocks exceed the threshold, the incoming packet will be paused or dropped.

1011001C **GQS0** **Global Queue Status 0** **FA41016E**

Bit	31	30	29	28	27	26	25	24	23	22	21	20	19	18	17	16
Name	PRI7_QUE		PRI6_QUE		PRI5_QUE		PRI4_QUE		PRI3_QUE		PRI2_QUE		PRI1_QUE		PRI0_QUE	
Type	RW		RW		RW		RW		RW		RW		RW		RW	
Reset	1	1	1	1	1	0	1	0	0	1	0	0	0	0	0	1
Bit	15	14	13	12	11	10	9	8	7	6	5	4	3	2	1	0
Name								EMPTY_CNT								
Type								RO								
Reset								1	0	1	1	0	1	1	1	0

Bit(s)	Name	Description
31:30	PRI7_QUE	**Queue mapping for Priority Tag #7**
29:28	PRI6_QUE	**Queue mapping for Priority Tag #6**
27:26	PRI5_QUE	**Queue mapping for Priority Tag #5**
25:24	PRI4_QUE	**Queue mapping for Priority Tag #4**
23:22	PRI3_QUE	**Queue mapping for Priority Tag #3**
21:20	PRI2_QUE	**Queue mapping for Priority Tag #2**
19:18	PRI1_QUE	**Queue mapping for Priority Tag #1**
17:16	PRI0_QUE	**Queue mapping for Priority Tag #0**
8:0	EMPTY_CNT	**Global Queue Block Counts** This field indicates the number of block count left in the global free queue.

10110020 **GQS1** **Global Queue Status 1** **00000000**

Bit	31	30	29	28	27	26	25	24	23	22	21	20	19	18	17	16
Name	OUTQUE_FULL_VO								OUTQUE_FULL_CL							
Type	RO								RO							
Reset	0	0	0	0	0	0	0	0	0	0	0	0	0	0	0	0
Bit	15	14	13	12	11	10	9	8	7	6	5	4	3	2	1	0

MEDIATEK CONFIDENTIAL
FOR farrwang@symnet.com.tw USE ONLY

This document contains information that is proprietary to MediaTek Inc.
Unauthorized reproduction or disclosure of this information in whole or in part is strictly prohibited.

Name	OUTQUE_FULL_BE								OUTQUE_FULL_BK							
Type	RO								RO							
Reset	0	0	0	0	0	0	0	0	0	0	0	0	0	0	0	0

Bit(s)	Name	Description
31:24	OUTQUE_FULL_VO	**Congested Voice Queue** The corresponding queue is congested
23:16	OUTQUE_FULL_CL	**Congested Control Load Queue** The corresponding queue is congested
15:8	OUTQUE_FULL_BE	**Congested Best Effort Queue** The corresponding queue is congested
7:0	OUTQUE_FULL_BK	**Congested Background Queue** The corresponding queue is congested

10110024 **ATS** **Address Table Search** **00000004**

Bit	31	30	29	28	27	26	25	24	23	22	21	20	19	18	17	16
Name																
Type																
Reset																
Bit	15	14	13	12	11	10	9	8	7	6	5	4	3	2	1	0
Name														**AT_LKUP_IDLE**	**SEARCH_NXT_ADDR**	**BEGIN_SEARCH_ADDR**
Type														RO	W1C	W1C
Reset														1	0	0

Bit(s)	Name	Description
2	AT_LKUP_IDLE	**Address Lookup Idle** This field indicates that Adress Table engine is in IDLE state.
1	SEARCH_NXT_ADDR	**Search For The Next Address (Self_Clear)**
0	BEGIN_SEARCH_ADDR	**Start Searching The Address Table (Self_Clear)**

10110028 **ATS0** **Address Table Status 0** **00000000**

Bit	31	30	29	28	27	26	25	24	23	22	21	20	19	18	17	16
Name	HASH_ADD_LU													R_PORT_MAP[6:4]		
Type	RO													RO		
Reset	0	0	0	0	0	0	0	0	0	0				0	0	0
Bit	15	14	13	12	11	10	9	8	7	6	5	4	3	2	1	0
Name	R_PORT_MAP[3:0]					R_VLD			R_AGE_FIELD					**R_MC_INGRESS**	**AT_TABLE_END**	**SEARCH_RDY**

© 2014 MediaTek Inc.
This document contains information that is proprietary to MediaTek Inc.
Unauthorized reproduction or disclosure of this information in whole or in part is strictly prohibited.

MEDIATEK CONFIDENTIAL
FOR fairyang@symnex.com.tw USE ONLY

Type	RO					RO				RO				RO	RO	RC
Reset	0	0	0	0		0	0	0	0	0	0	0		0	0	0

Bit(s)	Name	Description
31:22	HASH_ADD_LU	**Address table lookup address**
18:12	R_PORT_MAP	**Port map** The MAC existing in the bit =1.
10:7	R_VLD	**VLAN index**
6:4	R_AGE_FIELD	**Aging field**
2	R_MC_INGRESS	**MC Ingress**
1	AT_TABLE_END	**Search to the end of address table**
0	SEARCH_RDY	**Data is ready (read clear)**

1011002C ATS1 Address Table Status 1 00000000

Bit	31	30	29	28	27	26	25	24	23	22	21	20	19	18	17	16
Name																
Type																
Reset																
Bit	15	14	13	12	11	10	9	8	7	6	5	4	3	2	1	0
Name	MAC_AD_SER0															
Type	RO															
Reset	0	0	0	0	0	0	0	0	0	0	0	0	0	0	0	0

Bit(s)	Name	Description
15:0	MAC_AD_SER0	**Read MAC Address [15:0]**

10110030 ATS2 Address Table Status 2 00000000

Bit	31	30	29	28	27	26	25	24	23	22	21	20	19	18	17	16
Name	MAC_AD_SER0[31:16]															
Type	RO															
Reset	0	0	0	0	0	0	0	0	0	0	0	0	0	0	0	0
Bit	15	14	13	12	11	10	9	8	7	6	5	4	3	2	1	0
Name	MAC_AD_SER0[15:0]															
Type	RO															
Reset	0	0	0	0	0	0	0	0	0	0	0	0	0	0	0	0

Bit(s)	Name	Description
31:0	MAC_AD_SER0	**Read MAC Address [31:16]**

10110034 WMAD0 WT_MAC_AD0 00080000

Bit	31	30	29	28	27	26	25	24	23	22	21	20	19	18	17	16
Name	HASH_ADD_LU												AT_CFG_IDLE	W_PORT_MAP[6:4]		
Type	RO												RO	RW		

MEDIATEK CONFIDENTIAL
FOR fanwang@symnex.com.tw USE ONLY

This document contains information that is proprietary to MediaTek Inc.
Unauthorized reproduction or disclosure of this information in whole or in part is strictly prohibited.

Reset	0	0	0	0	0	0	0	0	0	0			1	0	0	0
Bit	15	14	13	12	11	10	9	8	7	6	5	4	3	2	1	0
Name	W_PORT_MAP[3:0]					W_INDEX				W_AGE_FIELD			SA_FILTER	W_MC_INGRESS	W_MAC_DONE	W_MAC_CMD
Type	RW					RW				RW			RW	RW	RO	WO
Reset	0	0	0	0		0	0	0	0	0	0	0	0	0	0	0

Bit(s)	Name	Description
31:22	HASH_ADD_LU	**Address table configuration address**
19	AT_CFG_IDLE	**Address Table Configuration SM IDLE**
18:12	W_PORT_MAP	**Write Port map**
10:7	W_INDEX	**VLAN index** 0: VLAN 0 1-14: ... 15: VLAN 15
6:4	W_AGE_FIELD	**Write Aging field** 3'b111: static address, 3'b001 - 3'b110: the entry is valid and will be aged out 2'b000: default, entry is invalid
3	SA_FILTER	**SA_FILTER** 0: default 1: The corresponding packet will be dropped when the SA is matched
2	W_MC_INGRESS	**Write MC Ingress**
1	W_MAC_DONE	**MAC Write Done** 0: default 1: MAC address write OK (read clear)
0	W_MAC_CMD	**MAC Address write Command** 0: default 1: the MAC write data is ready and write to MAC table now(self_clear)

10110038 **WMAD1** **WT_MAC_AD1** **00000000**

Bit	31	30	29	28	27	26	25	24	23	22	21	20	19	18	17	16
Name																
Type																
Reset																
Bit	15	14	13	12	11	10	9	8	7	6	5	4	3	2	1	0
Name	W_MAC_15_0															
Type	RW															
Reset	0	0	0	0	0	0	0	0	0	0	0	0	0	0	0	0

Bit(s)	Name	Description
15:0	W_MAC_15_0	**Write MAC Address[15:0]**

1011003C **WMAD2** **WT_MAC_AD2** **00000000**

Bit	31	30	29	28	27	26	25	24	23	22	21	20	19	18	17	16
Name	W_MAC_47_16[31:16]															
Type	RW															

MEDIATEK CONFIDENTIAL
FOR tarwang@symnex.com.tw USE ONLY

This document contains information that is proprietary to MediaTek Inc.
Unauthorized reproduction or disclosure of this information in whole or in part is strictly prohibited.

Reset	0	0	0	0	0	0	0	0	0	0	0	0	0	0	0	0
Bit	15	14	13	12	11	10	9	8	7	6	5	4	3	2	1	0
Name	**W_MAC_47_16[15:0]**															
Type	RW															
Reset	0	0	0	0	0	0	0	0	0	0	0	0	0	0	0	0

Bit(s)	Name	Description
31:0	W_MAC_47_16	**Write MAC Address[47:16]**

10110040 PVIDC0 PVID Configuration 0 00001001

Bit	31	30	29	28	27	26	25	24	23	22	21	20	19	18	17	16
Name									**P1_PVID[11:4]**							
Type									RW							
Reset									0	0	0	0	0	0	0	0
Bit	15	14	13	12	11	10	9	8	7	6	5	4	3	2	1	0
Name	**P1_PVID[3:0]**				**P0_PVID**											
Type	RW				RW											
Reset	0	0	0	1	0	0	0	0	0	0	0	0	0	0	0	1

Bit(s)	Name	Description
23:12	P1_PVID	**Port1 PVID Setting**
11:0	P0_PVID	**Port0 PVID Setting**

10110044 PVIDC1 PVID Configuration 1 00001001

Bit	31	30	29	28	27	26	25	24	23	22	21	20	19	18	17	16
Name									**P3_PVID[11:4]**							
Type									RW							
Reset									0	0	0	0	0	0	0	0
Bit	15	14	13	12	11	10	9	8	7	6	5	4	3	2	1	0
Name	**P3_PVID[3:0]**				**P2_PVID**											
Type	RW				RW											
Reset	0	0	0	1	0	0	0	0	0	0	0	0	0	0	0	1

Bit(s)	Name	Description
23:12	P3_PVID	**Port3 PVID Setting**
11:0	P2_PVID	**Port2 PVID Setting**

10110048 PVIDC2 PVID Configuration 2 00001001

Bit	31	30	29	28	27	26	25	24	23	22	21	20	19	18	17	16
Name									**P5_PVID[11:4]**							
Type									RW							
Reset									0	0	0	0	0	0	0	0
Bit	15	14	13	12	11	10	9	8	7	6	5	4	3	2	1	0
Name	**P5_PVID[3:0]**				**P4_PVID**											
Type	RW				RW											
Reset	0	0	0	1	0	0	0	0	0	0	0	0	0	0	0	1

Bit(s)	Name	Description

FOR MEDIATEK CONFIDENTIAL USE ONLY
for fanyang@symnex.com.tw

This document contains information that is proprietary to MediaTek Inc.
Unauthorized reproduction or disclosure of this information in whole or in part is strictly prohibited.

Bit(s)	Name	Description
23:12	P5_PVID	**Port5 PVID Setting** [Note] This feature is only valid when port 5 Giga MAC is implemented.
11:0	P4_PVID	**Port4 PVID Setting**

1011004C **PVIDC3** **PVID Configuration 3** **75020001**

Bit	31	30	29	28	27	26	25	24	23	22	21	20	19	18	17	16
Name		QUE3_PRIT				QUE2_PRIT				QUE1_PRIT				QUE0_PRIT		
Type		RW				RW				RW				RW		
Reset		1	1	1		1	0	1		0	0	0		0	1	0
Bit	15	14	13	12	11	10	9	8	7	6	5	4	3	2	1	0
Name					P6_PVID											
Type					RW											
Reset					0	0	0	0	0	0	0	0	0	0	0	1

Bit(s)	Name	Description
30:28	QUE3_PRIT	**Priority Tag Egress Mapping for Voice Queue#3**
26:24	QUE2_PRIT	**Priority Tag Egress Mapping for Control Load Queue#2**
22:20	QUE1_PRIT	**Priority Tag Egress Mapping for Best Effort Queue#1**
18:16	QUE0_PRIT	**Priority Tag Egress Mapping for Back Ground Queue#0**
11:0	P6_PVID	**Port6 PVID Setting**

10110050 **VLANI0** **VLAN Identifier 0** **00002001**

Bit	31	30	29	28	27	26	25	24	23	22	21	20	19	18	17	16
Name									VID1[11:4]							
Type									RW							
Reset									0	0	0	0	0	0	0	0
Bit	15	14	13	12	11	10	9	8	7	6	5	4	3	2	1	0
Name	VID1[3:0]				VID0											
Type	RW				RW											
Reset	0	0	1	0	0	0	0	0	0	0	0	0	0	0	0	1

Bit(s)	Name	Description
23:12	VID1	**VLAN Field Identifier for VLAN 1**
11:0	VID0	**VLAN Field Identifier for VLAN 0**

10110054 **VLANI1** **VLAN Identifier 1** **00004003**

Bit	31	30	29	28	27	26	25	24	23	22	21	20	19	18	17	16
Name									VID3[11:4]							
Type									RW							
Reset									0	0	0	0	0	0	0	0
Bit	15	14	13	12	11	10	9	8	7	6	5	4	3	2	1	0
Name	VID3[3:0]				VID2											
Type	RW				RW											
Reset	0	1	0	0	0	0	0	0	0	0	0	0	0	0	1	1

MEDIATEK CONFIDENTIAL
FOR farrwang@synnex.com.tw USE ONLY

This document contains information that is proprietary to MediaTek Inc.
Unauthorized reproduction or disclosure of this information in whole or in part is strictly prohibited.

Bit(s)	Name	Description
23:12	VID3	**VLAN Field Identifier for VLAN 3**
11:0	VID2	**VLAN Field Identifier for VLAN 2**

10110058 **VLANI2** **VLAN Identifier 2** **00006005**

Bit	31	30	29	28	27	26	25	24	23	22	21	20	19	18	17	16
Name									VID5[11:4]							
Type									RW							
Reset									0	0	0	0	0	0	0	0
Bit	15	14	13	12	11	10	9	8	7	6	5	4	3	2	1	0
Name	VID5[3:0]				VID4											
Type	RW				RW											
Reset	0	1	1	0	0	0	0	0	0	0	0	0	0	1	0	1

Bit(s)	Name	Description
23:12	VID5	**VLAN Field Identifier for VLAN 5**
11:0	VID4	**VLAN Field Identifier for VLAN 4**

1011005C **VLANI3** **VLAN Identifier 3** **00008007**

Bit	31	30	29	28	27	26	25	24	23	22	21	20	19	18	17	16
Name									VID7[11:4]							
Type									RW							
Reset									0	0	0	0	0	0	0	0
Bit	15	14	13	12	11	10	9	8	7	6	5	4	3	2	1	0
Name	VID7[3:0]				VID6											
Type	RW				RW											
Reset	1	0	0	0	0	0	0	0	0	0	0	0	0	1	1	1

Bit(s)	Name	Description
23:12	VID7	**VLAN Field Identifier for VLAN 7**
11:0	VID6	**VLAN Field Identifier for VLAN 6**

10110060 **VLANI4** **VLAN Identifier 4** **0000A009**

Bit	31	30	29	28	27	26	25	24	23	22	21	20	19	18	17	16
Name									VID9[11:4]							
Type									RW							
Reset									0	0	0	0	0	0	0	0
Bit	15	14	13	12	11	10	9	8	7	6	5	4	3	2	1	0
Name	VID9[3:0]				VID8											
Type	RW				RW											
Reset	1	0	1	0	0	0	0	0	0	0	0	0	1	0	0	1

Bit(s)	Name	Description
23:12	VID9	**VLAN Field Identifier for VLAN 9**
11:0	VID8	**VLAN Field Identifier for VLAN 8**

MEDIATEK CONFIDENTIAL
FOR tarwang@symnex.com.tw USE ONLY

This document contains information that is proprietary to MediaTek Inc.
Unauthorized reproduction or disclosure of this information in whole or in part is strictly prohibited.

10110064 **VLANI5** **VLAN Identifier 5** **0000C00B**

Bit	31	30	29	28	27	26	25	24	23	22	21	20	19	18	17	16
Name									VID11[11:4]							
Type									RW							
Reset									0	0	0	0	0	0	0	0
Bit	15	14	13	12	11	10	9	8	7	6	5	4	3	2	1	0
Name	VID11[3:0]				VID10											
Type	RW				RW											
Reset	1	1	0	0	0	0	0	0	0	0	0	0	1	0	1	1

Bit(s)	Name	Description
23:12	VID11	**VLAN Field Identifier for VLAN 11**
11:0	VID10	**VLAN Field Identifier for VLAN 10**

10110068 **VLANI6** **VLAN Identifier 6** **0000E00D**

Bit	31	30	29	28	27	26	25	24	23	22	21	20	19	18	17	16
Name									VID13[11:4]							
Type									RW							
Reset									0	0	0	0	0	0	0	0
Bit	15	14	13	12	11	10	9	8	7	6	5	4	3	2	1	0
Name	VID13[3:0]				VID12											
Type	RW				RW											
Reset	1	1	1	0	0	0	0	0	0	0	0	0	1	1	0	1

Bit(s)	Name	Description
23:12	VID13	**VLAN Field Identifier for VLAN 13**
11:0	VID12	**VLAN Field Identifier for VLAN 12**

1011006C **VLANI7** **VLAN Identifier 7** **0001000F**

Bit	31	30	29	28	27	26	25	24	23	22	21	20	19	18	17	16
Name									VID15[11:4]							
Type									RW							
Reset									0	0	0	0	0	0	0	1
Bit	15	14	13	12	11	10	9	8	7	6	5	4	3	2	1	0
Name	VID15[3:0]				VID14											
Type	RW				RW											
Reset	0	0	0	0	0	0	0	0	0	0	0	0	1	1	1	1

Bit(s)	Name	Description
23:12	VID15	**VLAN Field Identifier for VLAN 15**
11:0	VID14	**VLAN Field Identifier for VLAN 14**

10110070 **VMSC0** **VLAN Member Port Configuration 0** **FFFFFFFF**

Bit	31	30	29	28	27	26	25	24	23	22	21	20	19	18	17	16
Name	VLAN_MEMSET_3								VLAN_MEMSET_2							

MEDIATEK CONFIDENTIAL
FOR fairwang@symnex.com.tw USE ONLY

This document contains information that is proprietary to MediaTek Inc.
Unauthorized reproduction or disclosure of this information in whole or in part is strictly prohibited.

Type	RW								RW							
Reset	1	1	1	1	1	1	1	1	1	1	1	1	1	1	1	1
Bit	15	14	13	12	11	10	9	8	7	6	5	4	3	2	1	0
Name	VLAN_MEMSET_1								VLAN_MEMSET_0							
Type	RW								RW							
Reset	1	1	1	1	1	1	1	1	1	1	1	1	1	1	1	1

Bit(s)	Name	Description
31:24	VLAN_MEMSET_3	**VLAN 3 Member Port**
23:16	VLAN_MEMSET_2	**VLAN 2 Member Port**
15:8	VLAN_MEMSET_1	**VLAN 1 Member Port**
7:0	VLAN_MEMSET_0	**VLAN 0 Member Port**

10110074 VMSC1 VLAN Member Port Configuration 1 FFFFFFFF

Bit	31	30	29	28	27	26	25	24	23	22	21	20	19	18	17	16
Name	VLAN_MEMSET_7								VLAN_MEMSET_6							
Type	RW								RW							
Reset	1	1	1	1	1	1	1	1	1	1	1	1	1	1	1	1
Bit	15	14	13	12	11	10	9	8	7	6	5	4	3	2	1	0
Name	VLAN_MEMSET_5								VLAN_MEMSET_4							
Type	RW								RW							
Reset	1	1	1	1	1	1	1	1	1	1	1	1	1	1	1	1

Bit(s)	Name	Description
31:24	VLAN_MEMSET_7	**VLAN 7 Member Port**
23:16	VLAN_MEMSET_6	**VLAN 6 Member Port**
15:8	VLAN_MEMSET_5	**VLAN 5 Member Port**
7:0	VLAN_MEMSET_4	**VLAN 4 Member Port**

10110078 VMSC2 VLAN Member Port Configuration 2 FFFFFFFF

Bit	31	30	29	28	27	26	25	24	23	22	21	20	19	18	17	16
Name	VLAN_MEMSET_11								VLAN_MEMSET_10							
Type	RW								RW							
Reset	1	1	1	1	1	1	1	1	1	1	1	1	1	1	1	1
Bit	15	14	13	12	11	10	9	8	7	6	5	4	3	2	1	0
Name	VLAN_MEMSET_9								VLAN_MEMSET_8							
Type	RW								RW							
Reset	1	1	1	1	1	1	1	1	1	1	1	1	1	1	1	1

Bit(s)	Name	Description
31:24	VLAN_MEMSET_11	**VLAN 11 Member Port**
23:16	VLAN_MEMSET_10	**VLAN 10 Member Port**
15:8	VLAN_MEMSET_9	**VLAN 9 Member Port**
7:0	VLAN_MEMSET_8	**VLAN 8 Member Port**

1011007C VMSC3 VLAN Member Port Configuration 3 FFFFFFFF

MEDIATEK CONFIDENTIAL
FOR fanyuan@synnex.com.tw USE ONLY

This document contains information that is proprietary to MediaTek Inc.
Unauthorized reproduction or disclosure of this information in whole or in part is strictly prohibited.

Bit	31	30	29	28	27	26	25	24	23	22	21	20	19	18	17	16
Name	VLAN_MEMSET_15								VLAN_MEMSET_14							
Type	RW								RW							
Reset	1	1	1	1	1	1	1	1	1	1	1	1	1	1	1	1
Bit	15	14	13	12	11	10	9	8	7	6	5	4	3	2	1	0
Name	VLAN_MEMSET_13								VLAN_MEMSET_12							
Type	RW								RW							
Reset	1	1	1	1	1	1	1	1	1	1	1	1	1	1	1	1

Bit(s)	Name	Description
31:24	VLAN_MEMSET_15	**VLAN 15 Member Port**
23:16	VLAN_MEMSET_14	**VLAN 14 Member Port**
15:8	VLAN_MEMSET_13	**VLAN 13 Member Port**
7:0	VLAN_MEMSET_12	**VLAN 12 Member Port**

10110080 **POA** **Port Ability Offset** **00000000**

Bit	31	30	29	28	27	26	25	24	23	22	21	20	19	18	17	16
Name	G1_LINK	G0_LINK	LINK					G1_TXC		G0_TXC		XFC				
Type	RO	RO	RO					RO		RO		RO				
Reset	0	0	0	0	0	0	0	0	0	0	0	0	0	0	0	0
Bit	15	14	13	12	11	10	9	8	7	6	5	4	3	2	1	0
Name	DUPLEX							G1_SPD		G0_SPD		SPEED				
Type	RO							RO		RO		RO				
Reset	0	0	0	0	0	0	0	0	0	0	0	0	0	0	0	0

Bit(s)	Name	Description
31	G1_LINK	**Port 6 Link Status** 1: Link up 0: Link down
30	G0_LINK	**Port 5 Link Status** [Note] This feature is only valid when port 5 giga MAC is implemented. 1: Link up 0: Link down
29:25	LINK	**Port 4 ~ port0 Link Status** 1: Link up 0: Link down
24:23	G1_TXC	**Flow Control Status fo Port6** The flow control capability status bit after Auto-negotiation or force mode. 1xb: full duplex and tx flow control ON x1b: full duplex and rx flow control ON 00b: flow control off
22:21	G0_TXC	**Flow Control Status fo Port5** The flow control capability status bit after Auto-negotiation or force mode. [Note] This feature is only valid when port 5 giga MAC is implemented. 1xb: full duplex and tx flow control ON x1b: full duplex and rx flow control ON 00b: flow control off
20:16	XFC	**Flow Control Status of port 0 ~ 4** The flow control capability status bit after Auto-negotiation or force mode. 0: flow control off 1: full duplex and 802.3x flow control ON (after AN or forced)
15:9	DUPLEX	**Port6 ~ port0 Duplex Mode**

MEDIATEK CONFIDENTIAL
FOR farrwang@synnex.com.tw USE ONLY

This document contains information that is proprietary to MediaTek Inc.
Unauthorized reproduction or disclosure of this information in whole or in part is strictly prohibited.

Bit(s)	Name	Description
		[Note]: Port5 funciton is only valid when port 5 Giga MAC is implemented. 0: half duplex 1: full duplex
8:7	G1_SPD	**MII port 6 Speed:Mode** 10: 1000M 01: 100M 00: 10M
6:5	G0_SPD	**MII port 5 Speed:Mode** [Note] This feature is only valid when port 5 Giga MAC is implemented 10: 1000M 01: 100M 00: 10M
4:0	SPEED	**Port4 ~ port0 Speed Mode** 0: 10M 1: 100M

10110084 **FPA** **Force Port4 - Port0 Ability** **00000000**

Bit	31	30	29	28	27	26	25	24	23	22	21	20	19	18	17	16
Name	FORCE_MODE					FORCE_LINK						FORCE_XFC				
Type	RW					RW						RW				
Reset	0	0	0	0	0	0	0	0	0	0		0	0	0	0	0
Bit	15	14	13	12	11	10	9	8	7	6	5	4	3	2	1	0
Name				FORCE_DPX							XTAL_COMP	FORCE_SPD				
Type				RW							RW	RW				
Reset				0	0	0	0	0			0	0	0	0	0	0

Bit(s)	Name	Description
31:27	FORCE_MODE	**Port4 ~ port 0 force mode** 0: default 1: force mode. Auto-negotiation status is ignored. All the port ability are forced according to the following fields of the register FPA.
26:22	FORCE_LINK	**Port 4 ~ port 0 PHY Link** This field is valid only FORCE_MDOE is set. The final resolution is reported to POA register. 1: Link up 0: Link down
20:16	FORCE_XFC	**Port 4 ~ port 0 Flow control of PHY port** This field is valid only FORCE_MDOE is set. The final resolution is reported to POA register. 0: default OFF 1: 802.3x flow control ON
12:8	FORCE_DPX	**Flow Control Status of port 0 ~ 4** The flow control capability status bit after Auto-negotiation or force mode. 0: flow control off 1: full duplex and 802.3x flow control ON (after AN or forced)
5	XTAL_COMP	**Crystal rate compensation** 0: Disable 1: When the switch has transmitted 20000 bytes, the switch will compensate for the loss of crystal rate.
4:0	FORCE_SPD	**Port4 ~ port0 Speed:**

MEDIATEK CONFIDENTIAL
FOR farrwang@symnex.com.tw USE ONLY

This document contains information that is proprietary to MediaTek Inc.
Unauthorized reproduction or disclosure of this information in whole or in part is strictly prohibited.

Bit(s)	Name	Description
		This field is valid only FORCE_MDOE is set. The final resolution is reported to POA register. 1: 100M 0: 10M

10110088 **PTS** **Port Status** **00000000**

Bit	31	30	29	28	27	26	25	24	23	22	21	20	19	18	17	16
Name																
Type																
Reset																
Bit	15	14	13	12	11	10	9	8	7	6	5	4	3	2	1	0
Name							G1_TXC_STATUS	G0_TXC_STATUS		SECURED_ST						
Type							RO	RO		RO						
Reset							0	0		0	0	0	0	0	0	0

Bit(s)	Name	Description
9	G1_TXC_STATUS	**Port 6 TXC status** 0: no alert 1: error, no TXC
8	G0_TXC_STATUS	**Port 5 TXC status** [Note] This feature is only valid when port 5 Giga MAC is implemented. 0: no alert 1: error, no TXC
6:0	SECURED_ST	**Security Status** 0: no alert 1: has intruder coming if turn on the SA_secured mode, read clear

1011008C **SOCPC** **SoC Port Control** **027F7F7F**

Bit	31	30	29	28	27	26	25	24	23	22	21	20	19	18	17	16
Name							CRC_PADDING	CPU_SELECTION		DISBC2CPU						
Type							RW	RW		RW						
Reset							1	0	0	1	1	1	1	1	1	1
Bit	15	14	13	12	11	10	9	8	7	6	5	4	3	2	1	0
Name		DISMC2CPU								DISUN2CPU						
Type		RW								RW						
Reset		1	1	1	1	1	1	1		1	1	1	1	1	1	1

Bit(s)	Name	Description
25	CRC_PADDING	**CRC padding from CPU** If this bit is set , all packets from CPU don't need to append CRC and the outgoing LAN/WAN port will calculate and append CRC. 0: packets from CPU need CRC appending 1: packets from CPU without CRC appending

MEDIATEK CONFIDENTIAL
FOR fairwang@symnex.com.tw USE ONLY

This document contains information that is proprietary to MediaTek Inc.
Unauthorized reproduction or disclosure of this information in whole or in part is strictly prohibited.

Bit(s)	Name	Description
24:23	CPU_SELECTION	**CPU Selection** 00b: Port 6 01b: Port 0 10b: Port 4 11b: Port 5
22:16	DISBC2CPU	**Disable BC to CPU** When this bit = 1, BC frames from the corresponding port will not be forward to CPU. [Note] Port5 funciton is only valid when port 5 Giga MAC is implemented. 0: Includes CPU port. 1: Excludes CPU port
14:8	DISMC2CPU	**Disable MC to CPU** When this bit =1, MC frames from the corresponding port will not forward to CPU. [Note] Port5 funciton is only valid when port 5 Giga MAC is implemented. 0: Includes CPU port. 1: Excludes CPU port
6:0	DISUN2CPU	**Disable UN to CPU** When this bit =1, Unkonwn frames from the corresponding port will not forward to CPU. [Note] Port5 funciton is only valid when port 5 Giga MAC is implemented. 0: Includes CPU port. 1: Excludes CPU port

10110090 **POC0** **Port Control 0** **3F807F7F**

Bit	31	30	29	28	27	26	25	24	23	22	21	20	19	18	17	16
Name	HASH_ADDR_SHIFT		DIS_GMII_PORT_1	DIS_GMII_PORT_0	DIS_PORT					DISRMC2_CPU						
Type	RW		RW	RW	RW					RW						
Reset	0	0	1	1	1	1	1	1	1	0	0	0	0	0	0	0
Bit	15	14	13	12	11	10	9	8	7	6	5	4	3	2	1	0
Name		EN_FC							MAC_FCP_OPTION	EN_BP						
Type		RW							RW	RW						
Reset		1	1	1	1	1	1	1	0	1	1	1	1	1	1	1

Bit(s)	Name	Description
31:30	HASH_ADDR_SHIFT	**Address table hashing algorithm option for member set index**
29	DIS_GMII_PORT_1	**Disable port 6** 0: port enable 1: port disable
28	DIS_GMII_PORT_0	**Disable port 5** [Note] This feature is only valid when port 5 Giga MAC is implemented. 0: port enable 1: port disable
27:23	DIS_PORT	**Disable phy port**

MEDIATEK CONFIDENTIAL
FOR fariwang@symtex.com.tw USE ONLY

This document contains information that is proprietary to MediaTek Inc.
Unauthorized reproduction or disclosure of this information in whole or in part is strictly prohibited.

Bit(s)	Name	Description
		0: port enable 1: port disable
22:16	DISRMC2_CPU	**Unknown Reserved Multicast Frame Excludes CPU** [Note] Port5 funciton is only valid when port 5 Giga MAC is implemented. 0: Unknown Reserved Multicast Forward Rule (SGC.RMC_RULE) 1: Excludes CPU port
14:8	EN_FC	**Apply 802.3x status after Auto-negotiation** This field can individually control the 802.3x capability after Auto-negotiation is done. [Note] Port5 funciton is only valid when port 5 Giga MAC is implemented. 0: ignore the AN stats for 802.3x capability 1: follow the AN status for 802.3x capability
7	MAC_FCP_OPTION	**Multicast Flow control/Backpressure option** 0: When all ports are fc/bp disable, the switch will use drop_threshold to drop frames only. If not, the switch will use fc_threshold and drop_threshold. 1: When only the destination TX port is fc/bp disable, the switch will use drop_threshold to drop frames only . If not, that TX port uses fc_threshold and drop_threshold.
6:0	EN_BP	**Apply back pressure capability** [Note] Port5 funciton is only valid when port 5 Giga MAC is implemented. 0: ignore the back pressure mode (default OFF) 1: apply back pressure based on SGC.BP_MODE.

10110094 **POC1** **Port Control 1** **00000000**

Bit	31	30	29	28	27	26	25	24	23	22	21	20	19	18	17	16
Name			DISIPMC2CPU							BLOCKING_STATE						
Type			RW							RW						
Reset			0	0	0	0	0	0	0	0	0	0	0	0	0	0
Bit	15	14	13	12	11	10	9	8	7	6	5	4	3	2	1	0
Name		DIS_LRNING								SA_SECURED_PORT						
Type		RW								RW						
Reset		0	0	0	0	0	0	0		0	0	0	0	0	0	0

Bit(s)	Name	Description
29:23	DISIPMC2CPU	**Unknown IP Multicast Frame Excludes CPU** 0: Unknown IP Multicast Forward Rule (SGC.IP_MULT_RULE) 1: Excludes CPU port
22:16	BLOCKING_STATE	**Port State for Spanning Tree Protocol** [Note]: Port5 funciton is only valid when port 5 Giga MAC is implemented. 0: normal state 1: blocking state, forwarding rmc packet to cpu(need programming address table
14:8	DIS_LRNING	**Disable SA learning** [Note] Port5 funciton is only valid when port 5 Giga MAC is implemented. 0: default enabled 1: disable Source MAC learning
6:0	SA_SECURED_PORT	**SA secured mode** [Note*1]: Must set dis_learn and sa_secured at the same time. [Note*2] Port5 funciton is only valid when port 5 Giga MAC is implemented. 0: don't care SA match, 1: the packets' SA needs match, otherwise discard the packets

MEDIATEK CONFIDENTIAL
FOR farrwang@synnex.com.tw USE ONLY

This document contains information that is proprietary to MediaTek Inc.
Unauthorized reproduction or disclosure of this information in whole or in part is strictly prohibited.

10110098 **POC2** **Port Control 2** **00007F00**

Bit	31	30	29	28	27	26	25	24	23	22	21	20	19	18	17	16
Name		G1_TXC_CHECK	G0_TXC_CHECK				MLD2CPU_EN	IPV6_MULT_RULE		DIS_UC_PAUSE						
Type		RW	RW				RW	RW		RW						
Reset		0	0				0	0	0	0	0	0	0	0	0	0
Bit	15	14	13	12	11	10	9	8	7	6	5	4	3	2	1	0
Name	PER_VLAN_UNTAG_EN	ENAGING_PORT								UNTAG_EN						
Type	RW	RW								RW						
Reset	0	1	1	1	1	1	1	1		0	0	0	0	0	0	0

Bit(s)	Name	Description
30	G1_TXC_CHECK	**Check the port 6 TXC** if no txc clock, then disable MII port 0: disable 1: enable, check TXC
29	G0_TXC_CHECK	**Check the port 5 TXC** if no txc clock, then disable MII port [Note] This feature is only valid when port 5 Giga MAC is implemented. 0: disable 1: enable, check TXC
25	MLD2CPU_EN	**MLD Message Packets forward to CPU** 0: MLD message will be flooded 1: MLD message will be forward to CPU port only
24:23	IPV6_MULT_RULE	**Unknown IPV6 Multicast Frame Forward Rule** If no match in the address table, then folloing the rule 00: BC 01: to CPU 10: drop 11: Reserved
22:16	DIS_UC_PAUSE	**Disable Unicast Pause Frame** [Note] Port5 funciton is only valid when port 5 Giga MAC is implemented. 0: switch will consider pause frame when DA!=0180c20001 but unicast to CPU, 1: switch will not consider pause frame when DA!= 0180c20001 and unicast to CPU
15	PER_VLAN_UNTAG_EN	**Per port per vlan untag enable** VLAN tag removal option. 0: Use per port UNTAG_EN 1: Use untag enable bitmap in VLAN table
14:8	ENAGING_PORT	**Port aging** [Note] Port5 funciton is only valid when port 5 Giga MAC is implemented. 0: disable aging that the MAC address is belong to programmed port(s) 1: enable aging
6:0	UNTAG_EN	**Per Port VLAN Tag Temoval** [Note] Port5 funciton is only valid when port 5 Giga MAC is implemented. 0: disable

MEDIATEK CONFIDENTIAL
FOR farrwang@symnex.com.tw USE ONLY

This document contains information that is proprietary to MediaTek Inc.
Unauthorized reproduction or disclosure of this information in whole or in part is strictly prohibited.

Bit(s)	Name	Description
		1: enable VLAN tag field removal.

1011009C **SGC** **Switch Global Control** **6008A041**

Bit	31	30	29	28	27	26	25	24	23	22	21	20	19	18	17	16
Name		BKOFF_ALG	LEN_ERR_CHK	IP_MULT_RULE		RMC_RULE		LED_FLASH_TIME		BISH_TH		BISH_DIS	BP_MODE		DISMIIPORT_WASTX	
Type		RW	RW	RW		RW		RW		RW		RW	RW		RW	
Reset		1	1	0	0	0	0	0	0	0	0	0	1	0	0	0

Bit	15	14	13	12	11	10	9	8	7	6	5	4	3	2	1	0
Name	BP_JAM_CNT				DISABLE_TX_BACKOFF	ADDRESS_HASH_ALG		DIS_PKT_TX_ABORT	PKT_MAX_LEN		BC_STORM_PROT		AGING_INTERNAL			
Type	RW				RW	RW		RW	RW		RW		RW			
Reset	1	0	1	0	0	0	0	0	0	1	0	0	0	0	0	1

Bit(s)	Name	Description
30	BKOFF_ALG	**Backoff Algorithm Option** 0: default 1: comply with UNH test
29	LEN_ERR_CHK	**Length of Received Frame Check Enable** When the bit is set, the received packet length will be checked for length encapsulated frames. 0: default disabled 1: comply with UNH test
28:27	IP_MULT_RULE	**Unknown IP Multicase Frame Forward Rule** If no match in the address table, then following the rules. 00: BC 01: to cpu 10: drop 11: reserved
26:25	RMC_RULE	**Unknown Reserved Multicast Frame Forward Rule** If no match in the address table, then follow the rules. 00: to all port(not include blocking state port) 01: to cpu 10: drop 11: reserved
24:23	LED_FLASH_TIME	**The Frequency Of LED Flash** 00: 30ms 01: 60ms 10: 240ms 11: 480ms
22:21	BISH_TH	**The Threshold Of Memory Bisshop** 11: skip if fail 8 blocks, 0 00: skip if fail 16 (default, from pins) 01: skip if fail 48 10: skip if fail 64
20	BISH_DIS	**Build In Self Hop**

MEDIATEK CONFIDENTIAL
FOR farrwang@synnex.com.tw USE ONLY

This document contains information that is proprietary to MediaTek Inc.
Unauthorized reproduction or disclosure of this information in whole or in part is strictly prohibited.

Bit(s)	Name	Description
		0: enable skip function 1: disable
19:18	BP_MODE	**Back Pressure Mode** 00: disable 01: BP jam, the jam number is set by bp_num 10: BP jamALL, jam packet until the BP condition is released(default), 11: BP carrier, use carrier insertion to do back pressure
17:16	DISMIIPORT_WASTX	**GMII Port Disable Was_Transmit** [Note] This feature is only valid when port 5 Giga MAC is implemented. 1: disable was_transmit (good for late CRS PHY, like HPNA2.0 or power-LAN), 0: enable
15:12	BP_JAM_CNT	**Back Pressure Jam Number** The consecutive jam count when back pressure is enabled, The default is 10 packet jam then one no-jam packet.
11	DISABLE_TX_BACKOFF	**Disable The Collision Back Off Timer** 0: default 1: re-transmit immediately after collision
10:9	ADDRESSS_HASH_ALG	**MAC Address Hashing Algorithm** 00: direct mode, using last 10-bit as hashing address 01: XOR48 mode 10: XOR32 mode 11: reserved
8	DIS_PKT_TX_ABORT	**Disable Packet TX Abort** 1: Disable collision 16 packet abort and late collision abort 0: enable both abort
7:6	PKT_MAX_LEN	**Maximum Packet Length** Untaged / VLAN-taged 00: 1536 Bytes / 1536 Bytes 01: 1518 Bytes / 1522 Bytes 10: 1522 Bytes / 1526 Bytes 11: Reserved / Reserved
5:4	BC_STORM_PROT	**Global Broadcast Storm Protection** BC will be blocked, if the following number of BC blocks in in output queues 00: disable 01: 64 10: 96 11: 128
3:0	AGING_INTERNAL	**Aging Timer** 0000: disable age 0001: 300sec 0010 - 0111: 600 ~ 38400sec 1xxx: Fast Age (60sec)

101100A0 **STRT** **Switch Reset** **00000000**

Bit	31	30	29	28	27	26	25	24	23	22	21	20	19	18	17	16
Name	RESET_SW[31:16]															
Type	WO															
Reset	0	0	0	0	0	0	0	0	0	0	0	0	0	0	0	0
Bit	15	14	13	12	11	10	9	8	7	6	5	4	3	2	1	0
Name	RESET_SW[15:0]															
Type	WO															
Reset	0	0	0	0	0	0	0	0	0	0	0	0	0	0	0	0

FOR MEDIATEK CONFIDENTIAL
tarwang@sysnex.com.tw USE ONLY

This document contains information that is proprietary to MediaTek Inc.
Unauthorized reproduction or disclosure of this information in whole or in part is strictly prohibited.

Bit(s)	Name	Description
31:0	RESET_SW	**Reset switch engine, data, address, link memory , cpu port and ahb interface when writing data to the STRT register.**

101100A4 **LEDP0** **LED Port0** **00000005**

Bit	31	30	29	28	27	26	25	24	23	22	21	20	19	18	17	16
Name																
Type																
Reset																
Bit	15	14	13	12	11	10	9	8	7	6	5	4	3	2	1	0
Name													P0_LED			
Type													RW			
Reset													0	1	0	1

Bit(s)	Name	Description
3:0	P0_LED	**port0 LED state, default = link/activity** 0000: link 0001: 100M speed 0010: duplex 0011: activity 0100: collision 0101: link/activity 0110: duplex/collsion 0111: 10M speed/activity 1000: 100M speed/activity 1011: off 1100: on 1010: blink

101100A8 **LEDP1** **LED Port1** **00000005**

Bit	31	30	29	28	27	26	25	24	23	22	21	20	19	18	17	16
Name																
Type																
Reset																
Bit	15	14	13	12	11	10	9	8	7	6	5	4	3	2	1	0
Name													P1_LED			
Type													RW			
Reset													0	1	0	1

Bit(s)	Name	Description
3:0	P1_LED	**port1 LED state, default = link/activity**

101100AC **LEDP2** **LED Port2** **00000005**

Bit	31	30	29	28	27	26	25	24	23	22	21	20	19	18	17	16
Name																
Type																
Reset																
Bit	15	14	13	12	11	10	9	8	7	6	5	4	3	2	1	0

MEDIATEK CONFIDENTIAL
FOR farrwang@synnex.com.tw USE ONLY

This document contains information that is proprietary to MediaTek Inc.
Unauthorized reproduction or disclosure of this information in whole or in part is strictly prohibited.

Name													**P2_LED**			
Type													RW			
Reset													0	1	0	1

Bit(s)	Name	Description
3:0	P2_LED	**port2 LED state, default = link/activity**

101100B0 **LEDP3** **LED Port3** **00000005**

Bit	31	30	29	28	27	26	25	24	23	22	21	20	19	18	17	16
Name																
Type																
Reset																
Bit	15	14	13	12	11	10	9	8	7	6	5	4	3	2	1	0
Name													**P3_LED**			
Type													RW			
Reset													0	1	0	1

Bit(s)	Name	Description
3:0	P3_LED	**port3 LED state, default = link/activity**

101100B4 **LEDP4** **LED Port4** **00000005**

Bit	31	30	29	28	27	26	25	24	23	22	21	20	19	18	17	16
Name																
Type																
Reset																
Bit	15	14	13	12	11	10	9	8	7	6	5	4	3	2	1	0
Name													**P4_LED**			
Type													RW			
Reset													0	1	0	1

Bit(s)	Name	Description
3:0	P4_LED	**port4 LED state, default = link/activity**

101100B8 **WDTR** **Watch Dog Trigger Reset** **0000001E**

Bit	31	30	29	28	27	26	25	24	23	22	21	20	19	18	17	16
Name																
Type																
Reset																
Bit	15	14	13	12	11	10	9	8	7	6	5	4	3	2	1	0
Name									**BUF_STARV_TH**							
Type									RW							
Reset									0	0	0	1	1	1	1	0

Bit(s)	Name	Description
7:0	BUF_STARV_TH	**Buffer starvation threshold** Switch will interrupt CPU when the global queue block counts is less than the threshold for 3 seconds.

MEDIATEK CONFIDENTIAL
FOR fartwang@symnex.com.tw USE ONLY

© 2014 MediaTek Inc.

This document contains information that is proprietary to MediaTek Inc.
Unauthorized reproduction or disclosure of this information in whole or in part is strictly prohibited.

101100BC **DES** **Debug Signal** **00000000**

Bit	31	30	29	28	27	26	25	24	23	22	21	20	19	18	17	16
Name																
Type																
Reset																
Bit	15	14	13	12	11	10	9	8	7	6	5	4	3	2	1	0
Name	DEBUG_SIGNAL															
Type	RO															
Reset	0	0	0	0	0	0	0	0	0	0	0	0	0	0	0	0

Bit(s)	Name	Description
15:0	DEBUG_SIGNAL	**Port 5 Debug Signal**

101100C0 **PCR0** **PHY Control Register 0** **00000000**

Bit	31	30	29	28	27	26	25	24	23	22	21	20	19	18	17	16
Name	WT_NWAY_DATA															
Type	RW															
Reset	0	0	0	0	0	0	0	0	0	0	0	0	0	0	0	0
Bit	15	14	13	12	11	10	9	8	7	6	5	4	3	2	1	0
Name	RESV0	RD_PHY_CMD	WT_PHY_CMD	CPU_PHY_REG								CPU_PHY_ADDR				
Type	RO	RW	RW	RW								RW				
Reset	0	0	0	0	0	0	0	0				0	0	0	0	0

Bit(s)	Name	Description
31:16	WT_NWAY_DATA	**The Data Be Written into PHY**
15	RESV0	**Reserved**
14	RD_PHY_CMD	**Read command** To enable read command on PHY, write 1 to this bit . After command is completed, this bit is self-cleared.
13	WT_PHY_CMD	**Write command** To enable write command on PHY, write 1 to this bit . After command is completed, this bit is self-cleared
12:8	CPU_PHY_REG	**PHY register address**
4:0	CPU_PHY_ADDR	**PHY address** (Note: The internal 5-ports PHY reserves the PHY address starting from 5'd0 ~ 5'd4. For the external PHY, the PHY address from 5'd5 to 5'd31 can be applied. The default PHY address of Port 5 is 5'd5 for auto-polling function.)

101100C4 **PCR1** **PHY Control Register 1** **00000000**

Bit	31	30	29	28	27	26	25	24	23	22	21	20	19	18	17	16
Name	RD_DATA															
Type	RO															
Reset	0	0	0	0	0	0	0	0	0	0	0	0	0	0	0	0
Bit	15	14	13	12	11	10	9	8	7	6	5	4	3	2	1	0
Name															RD_R	WT_D

MEDIATEK CONFIDENTIAL
FOR fairwang@ymax.com.tw USE ONLY

This document contains information that is proprietary to MediaTek Inc.
Unauthorized reproduction or disclosure of this information in whole or in part is strictly prohibited.

															DY	ONE
Type															RC	RC
Reset															0	0

Bit(s)	Name	Description
31:16	RD_DATA	**The Read Data**
1	RD_RDY	**Read Operation is Done**
0	WT_DONE	**Write Operation is Done**

101100C8 **FPA1** **Force P5P6 Ability** **05500328**

Bit	31	30	29	28	27	26	25	24	23	22	21	20	19	18	17	16
Name			AP_EN	EXT_PHY_ADDR_BASE					G0_RXCLK_SKEW_SEL		G0_TXCLK_SKEW_SEL			TURBO_MII_CLK		
Type			RW	RW					RW		RW			RW		
Reset			0	0	0	1	0	1	0	1	0	1		0		
Bit	15	14	13	12	11	10	9	8	7	6	5	4	3	2	1	0
Name			FORCE_RGMII_LINK1	FORCE_RGMII_LINK0	FORCE_RGMII_EN1	FORCE_RGMII_EN0	FORCE_RGMII_XFC1		FORCE_RGMII_XFC0		FORCE_RGMII_DPX1	FORCE_RGMII_DPX0	FORCE_RGMII_SPD1		FORCE_RGMII_SPD0	
Type			RW	RW	RW	RW	RW		RW		RW	RW	RW		RW	
Reset			0	0	0	0	1	1	0	0	1	0	1	0	0	0

Bit(s)	Name	Description
29	AP_EN	**Port 5 Auto Polling Enable** [Note] This feature is only valid when port 5 Giga MAC is implemented.
28:24	EXT_PHY_ADDR_BASE	**Port 5 External PHY Base Address** [Note] This feature is only valid when port 5 Giga MAC is implemented.
23:22	G0_RXCLK_SKEW_SEL	**Port 5 RXCLK Skew Selection** [Note] This feature is only valid when port 5 Giga MAC is implemented.
21:20	G0_TXCLK_SKEW_SEL	**Port 5 TXCLK Skew Selection** [Note] This feature is only valid when port 5 Giga MAC is implemented.
18	TURBO_MII_CLK	**Port 5 revMII Mode Clock Selection** [Note] This feature is only valid when port 5 Giga MAC is implemented. 0: 25MHz output clock 1: 31.25MHz output clock
13	FORCE_RGMII_LINK1	**Force Port 6 Link** This field is valid only FORCE_MDOE is set. The final resolution is reported to POA register. 0: link down 1: link up
12	FORCE_RGMII_LINK0	**Force Port 5 Link** This field is valid only FORCE_MDOE is set. The final resolution is reported to POA register. [Note] This feature is only valid when port 5 Giga MAC is implemented. 0: link down 1: link up

MEDIATEK CONFIDENTIAL
FOR farrwang@synnex.com INTERNAL USE ONLY

This document contains information that is proprietary to MediaTek Inc.
Unauthorized reproduction or disclosure of this information in whole or in part is strictly prohibited.

Bit(s)	Name	Description
11	FORCE_RGMII_EN1	**Force Port 6 Enable** 0: reserved 1: force mode. Auto-negotiation status is ignored. Port 5 ability is forced according to the following fields of the register FPA1.
10	FORCE_RGMII_EN0	**Force Port 5 Enable** [Note] This feature is only valid when port 5 Giga MAC is implemented. 0: default 1: force mode. Auto-negotiation status is ignored. Port 5 ability is forced according to the following fields of the register FPA1.
9:8	FORCE_RGMII_XFC1	**Force port 6 flow control ability** This field is valid only FORCE_MDOE is set. The final resolution is reported to POA register. 1x: for tx x1: for rx
7:6	FORCE_RGMII_XFC0	**Force port 5 flow control ability** This field is valid only FORCE_MDOE is set. The final resolution is reported to POA register. [Note] This feature is only valid when port 5 Giga MAC is implemented. 1x: for tx x1: for rx
5	FORCE_RGMII_DPX1	**Force port 6 duplex** This field is valid only FORCE_MDOE is set. The final resolution is reported to POA register. 0: half duplex 1: full duplex
4	FORCE_RGMII_DPX0	**Force port 5 duplex** This field is valid only FORCE_MDOE is set. The final resolution is reported to POA register. [Note] This feature is only valid when port 5 Giga MAC is implemented. 0: half duplex 1: full duplex
3:2	FORCE_RGMII_SPD1	**Force port 6 speed** This field is valid only FORCE_MDOE is set. The final resolution is reported to POA register. 1x: 1GbpsMhz 01: 100MbpsMHz 00: 10MbpsMHz
1:0	FORCE_RGMII_SPD0	**Force port 5 speed** This field is valid only FORCE_MDOE is set. The final resolution is reported to POA register. [Note] This feature is only valid when port 5 Giga MAC is implemented. 1x: 1GbpsMhz 01: 100MbpsMHz 00: 10MbpsMHz

101100CC **FCT2** **Flow Control Threshold 2** **0000A30C**

Bit	31	30	29	28	27	26	25	24	23	22	21	20	19	18	17	16
Name								DIS_IPV6MC2CPU							MUST_DROP_RLS_TH[4:3]	
Type								RW							RW	
Reset								0	0	0	0	0	0	0	0	0
Bit	15	14	13	12	11	10	9	8	7	6	5	4	3	2	1	0
Name	MUST_DROP_RL			MUST_DROP_SET_TH							MC_PER_PORT_TH					

This document contains information that is proprietary to MediaTek Inc.
Unauthorized reproduction or disclosure of this information in whole or in part is strictly prohibited.
MEDIATEK CONFIDENTIAL FOR fan.wang@symnex.com.tw USE ONLY

	S_TH[2:0]															
Type	RW			RW							RW					
Reset	1	0	1	0	0	0	1	1			0	0	1	1	0	0

Bit(s)	Name	Description
24:18	DIS_IPV6MC2CPU	**Unknown IPv6 Multicast Frame Excludes CPU** 0: Unknown IPv6 Multicast Forward Rule (POC2.IPV6_MULT_RULE) 1: Exclude CPU port
17:13	MUST_DROP_RLS_TH	**If the global queue pointer higher than the threshold. The must drop condition will be released.**
12:8	MUST_DROP_SET_TH	**If the global queue pointer reach msut drop threshold. All incoming packets have to be dropped.**
5:0	MC_PER_PORT_TH	**MC packets per port threshold.** When the global queue reaches the flow control threshold on register FCT0, per port output threshold for MC packet will be checked to enable flow-control or packet-drop on imncoming MC packets.

101100D0 **QSS0** **Queue Status 0** **00000000**

Bit	31	30	29	28	27	26	25	24	23	22	21	20	19	18	17	16
Name									BE_CNT_R[8:1]							
Type									RO							
Reset									0	0	0	0	0	0	0	0
Bit	15	14	13	12	11	10	9	8	7	6	5	4	3	2	1	0
Name	BE_CNT_R[0:0]	BK_CNT_R										SEE_CNT_PORT_SEL				
Type	RO	RO										RW				
Reset	0	0	0	0	0	0	0	0	0	0	0	0	0	0	0	0

Bit(s)	Name	Description
23:15	BE_CNT_R	**Link control best effort queue block counter monitor.**
14:5	BK_CNT_R	**Link control background queue block counter monitor.**
4:0	SEE_CNT_PORT_SEL	**Link control bock couonter port selection**

101100D4 **QSS1** **Queue Status 1** **00000000**

Bit	31	30	29	28	27	26	25	24	23	22	21	20	19	18	17	16
Name															VO_CNT_R[8:7]	
Type															RO	
Reset															0	0
Bit	15	14	13	12	11	10	9	8	7	6	5	4	3	2	1	0
Name	VO_CNT_R[6:0]							CL_CNT_R								
Type	RO							RO								
Reset	0	0	0	0	0	0	0	0	0	0	0	0	0	0	0	0

Bit(s)	Name	Description
17:9	VO_CNT_R	**Link control voice queue block counter monitor.**
8:0	CL_CNT_R	**Link control control queue block counter monitor.**

FOR MEDIATEK CONFIDENTIAL
fartwang@symnex.com.tw USE ONLY

This document contains information that is proprietary to MediaTek Inc.
Unauthorized reproduction or disclosure of this information in whole or in part is strictly prohibited.

101100D8 **DEC** **Debug Control** **40400100**

Bit	31	30	29	28	27	26	25	24	23	22	21	20	19	18	17	16
Name	SW2FE_IPG								FE2SW_IPG							
Type	RW								RW							
Reset	0	1	0	0	0	0	0	0	0	1	0	0	0	0	0	0
Bit	15	14	13	12	11	10	9	8	7	6	5	4	3	2	1	0
Name								BRIDGE_EN								
Type								RW								
Reset								1								

Bit(s)	Name	Description
31:24	SW2FE_IPG	**SW2FE Bridge IPG Byte Count** Inter-Frame Byte Count between the consecutive frames flowing from Switch to Frame Engine
23:16	FE2SW_IPG	**FE2SW Bridge IPG byte count** Inter-Frame Byte Count between the consecurtive frames flowing from Frame Engine to Switch
8	BRIDGE_EN	**Enable FE2SW Bridge IPG Prevention** 1'b0: Disable 1'b1: Enable IPG Prevention when FE2SW_BRIDGE_IPG is too short (8'd16) to receive the next frame.

101100DC **MTI** **Memory Test Information** **0000006A**

Bit	31	30	29	28	27	26	25	24	23	22	21	20	19	18	17	16
Name																
Type																
Reset																
Bit	15	14	13	12	11	10	9	8	7	6	5	4	3	2	1	0
Name										SW_RAM_TEST_DONE	LK_RAM_TEST_DONE	LK_RAM_TEST_FAIL	AT_RAM_TEST_DONE	AT_RAM_TEST_FAIL	DT_RAM_TEST_DONE	DT_RAM_TEST_FAIL
Type										RO	RO	RO	RO	RO	RO	RO
Reset										1	1	0	1	0	1	0

Bit(s)	Name	Description
6	SW_RAM_TEST_DONE	**Switch Memory Ram Test Done**
5	LK_RAM_TEST_DONE	**Link Ram Test Done**
4	LK_RAM_TEST_FAIL	**Link Ram Test Fail**
3	AT_RAM_TEST_DONE	**Address Table Ram Test Done**
2	AT_RAM_TEST_FAI	**Address Table Ram Test Fail**

MEDIATEK CONFIDENTIAL
FOR farrwang@synnex.com.tw USE ONLY

This document contains information that is proprietary to MediaTek Inc.
Unauthorized reproduction or disclosure of this information in whole or in part is strictly prohibited.

Bit(s)	Name	Description
	L	
1	DT_RAM_TEST_DONE	**Data Buffer Ram Test Done**
0	DT_RAM_TEST_FAIL	**Data Buffer Ram Test Fail**

101100E0 **PPC** **Packet Counter** **00000000**

Bit	31	30	29	28	27	26	25	24	23	22	21	20	19	18	17	16
Name	SW2FE_CNT															
Type	RO															
Reset	0	0	0	0	0	0	0	0	0	0	0	0	0	0	0	0
Bit	15	14	13	12	11	10	9	8	7	6	5	4	3	2	1	0
Name	FE2SW_CNT															
Type	RO															
Reset	0	0	0	0	0	0	0	0	0	0	0	0	0	0	0	0

Bit(s)	Name	Description
31:16	SW2FE_CNT	**SW2FE_CNT Switch to frame engine packet counter**
15:0	FE2SW_CNT	**FE2SW_CNT Frame engine to switch packet counter**

101100E4 **SGC2** **Switch Global Control 2** **00000000**

Bit	31	30	29	28	27	26	25	24	23	22	21	20	19	18	17	16
Name	P6_RXFC_QUE_EN	P6_TXFC_WL_EN	LAN_PMAP						SPECIAL_TAG_EN	TX_CPU_TPID_BIT_MAP						
Type	RW	RW	RW						RW	RW						
Reset	0	0	0	0	0	0	0	0	0	0	0	0	0	0	0	0
Bit	15	14	13	12	11	10	9	8	7	6	5	4	3	2	1	0
Name				P6_TXFC_QUE_EN	ARBITER_LAN_EN	CPU_TPID_EN	ARBITER_GPT_EN	SLOT_4TO1		DOUBLE_TAG_EN						
Type				RW	RW	RW	RW	RW		RW						
Reset				0	0	0	0	0		0	0	0	0	0	0	0

Bit(s)	Name	Description
31	P6_RXFC_QUE_EN	**Port 6 RX flow control on per egress queue** 0: Port 6 RX flow control will pause all 4 egress queue 1: Port 6 RX flow control will pause 4 egress queue independently according to the corresponding congestion signals.
30	P6_TXFC_WL_EN	**Port 6 TX flow controll by Switch WAN/LAN port** 0: Port 6 TX flow control is decided by any port and any queue of the Switch congestion 1: Port 6 TX flow control is decided by WAN/LAN port of the Switch congestion separately.
29:24	LAN_PMAP	**Lan port bit map**

MEDIATEK CONFIDENTIAL
FOR farrwan@symtex.com.tw USE ONLY

This document contains information that is proprietary to MediaTek Inc.
Unauthorized reproduction or disclosure of this information in whole or in part is strictly prohibited.

Bit(s)	Name	Description
		This field indicates per port attribute used for flow control. (Note: Port5 funciton is only valid when port 5 Giga MAC is implemented) 1: Lan port 0: Wan port
23	SPECIAL_TAG_EN	**Special Tag enable** 0: default; RX special tag is enabled according to the global control bit-CPU_TPID_EN. TX special tag is enabled according to the per-port TX_CPU_TPID_BIT_MAP 1: CPU_TPID_EN is not used Both TX and RX special tag feature are decided by the per-port TX_CPU_TPID_BIT_MAP
22:16	TX_CPU_TPID_BIT_MAP	**Transmit CPU TPID(810x) port bit map** 0: default (TPID=0x8100) 1: TPID=0x810? depending on TX/RX usages (Note: Port5 funciton is only valid when port 5 Giga MAC is implemented)
12	P6_TXFC_QUE_EN	**Port 6 per queue TX flow control** This bit is only valid when P6_TXFC_WL_EN is enabled. 0: 4 congest signals to Frame Engine are decided by the wired-or result of all egress queues on Switch WAN/LAN ports. 1: 4 congest signals to Frame Engine are decided by the individual and the corresponding 4 egress queues on Switch WAN/LAN ports.
11	ARBITER_LAN_EN	**Memory arbiter only for P0~P4 enable** 0: default 1: memory arbiter only for P0~P4.
10	CPU_TPID_EN	**CPU TPID(81xx) enable** 0: disable. CPU TPID=8100 1: enable. CPU TPID=810x.
9	ARBITER_GPT_EN	**Memory Arbiter only for P5 and P6** 0: default 1: Enable
8	SLOT_4TO1	**Memory Arbiter Ratio Selection** 0: (P5,P6) : (P0-P4) = 3:2 1: (P5,P6) : (P0-P4) = 4:1
6:0	DOUBLE_TAG_EN	**Insert double tag field** When this bit is set , the incoming packet is allowed to insert outer or double tag. 1: enable double tag field 0: disable the double tag field. (Note: Port5 funciton is only valid when port 5 Giga MAC is implemented)

101100E8 **P0PC** **Port 0 Packet Counter** **00000000**

Bit	31	30	29	28	27	26	25	24	23	22	21	20	19	18	17	16
Name	BAD_PKT_CNT0															
Type	RO															
Reset	0	0	0	0	0	0	0	0	0	0	0	0	0	0	0	0
Bit	15	14	13	12	11	10	9	8	7	6	5	4	3	2	1	0
Name	GOOD_PKT_CNT0															
Type	RO															
Reset	0	0	0	0	0	0	0	0	0	0	0	0	0	0	0	0

Bit(s)	Name	Description
31:16	BAD_PKT_CNT0	**Port 0 Receive Bad Packet Counter**
15:0	GOOD_PKT_CNT0	**Port 0 Receive Good Packet Counter**

FOR fanyyang@symnex.com.tw USE ONLY
MEDIATEK CONFIDENTIAL

This document contains information that is proprietary to MediaTek Inc.
Unauthorized reproduction or disclosure of this information in whole or in part is strictly prohibited.

101100EC **P1PC** **Port 1 Packet Counter** **00000000**

Bit	31	30	29	28	27	26	25	24	23	22	21	20	19	18	17	16
Name	BAD_PKT_CNT1															
Type	RO															
Reset	0	0	0	0	0	0	0	0	0	0	0	0	0	0	0	0
Bit	15	14	13	12	11	10	9	8	7	6	5	4	3	2	1	0
Name	GOOD_PKT_CNT1															
Type	RO															
Reset	0	0	0	0	0	0	0	0	0	0	0	0	0	0	0	0

Bit(s)	Name	Description
31:16	BAD_PKT_CNT1	**Port 1 Receive Bad Packet Counter**
15:0	GOOD_PKT_CNT1	**Port 1 Receive Good Packet Counter**

101100F0 **P2PC** **Port 2 Packet Counter** **00000000**

Bit	31	30	29	28	27	26	25	24	23	22	21	20	19	18	17	16
Name	BAD_PKT_CNT2															
Type	RO															
Reset	0	0	0	0	0	0	0	0	0	0	0	0	0	0	0	0
Bit	15	14	13	12	11	10	9	8	7	6	5	4	3	2	1	0
Name	GOOD_PKT_CNT2															
Type	RO															
Reset	0	0	0	0	0	0	0	0	0	0	0	0	0	0	0	0

Bit(s)	Name	Description
31:16	BAD_PKT_CNT2	**Port 2 Receive Bad Packet Counter**
15:0	GOOD_PKT_CNT2	**Port 2 Receive Good Packet Counter**

101100F4 **P3PC** **Port 3 Packet Counter** **00000000**

Bit	31	30	29	28	27	26	25	24	23	22	21	20	19	18	17	16
Name	BAD_PKT_CNT3															
Type	RO															
Reset	0	0	0	0	0	0	0	0	0	0	0	0	0	0	0	0
Bit	15	14	13	12	11	10	9	8	7	6	5	4	3	2	1	0
Name	GOOD_PKT_CNT3															
Type	RO															
Reset	0	0	0	0	0	0	0	0	0	0	0	0	0	0	0	0

Bit(s)	Name	Description
31:16	BAD_PKT_CNT3	**Port 3 Receive Bad Packet Counter**
15:0	GOOD_PKT_CNT3	**Port 3 Receive Good Packet Counter**

101100F8 **P4PC** **Port 4 Packet Counter** **00000000**

MEDIATEK CONFIDENTIAL
FOR fariwang@symnex.com.tw USE ONLY

This document contains information that is proprietary to MediaTek Inc.
Unauthorized reproduction or disclosure of this information in whole or in part is strictly prohibited.

Bit	31	30	29	28	27	26	25	24	23	22	21	20	19	18	17	16
Name	BAD_PKT_CNT4															
Type	RO															
Reset	0	0	0	0	0	0	0	0	0	0	0	0	0	0	0	0
Bit	15	14	13	12	11	10	9	8	7	6	5	4	3	2	1	0
Name	GOOD_PKT_CNT4															
Type	RO															
Reset	0	0	0	0	0	0	0	0	0	0	0	0	0	0	0	0

Bit(s)	Name	Description
31:16	BAD_PKT_CNT4	**Port 4 Receive Bad Packet Counter**
15:0	GOOD_PKT_CNT4	**Port 4 Receive Good Packet Counter**

101100FC P5PC Port 5 Packet Counter 00000000

Bit	31	30	29	28	27	26	25	24	23	22	21	20	19	18	17	16
Name	BAD_PKT_CNT5															
Type	RO															
Reset	0	0	0	0	0	0	0	0	0	0	0	0	0	0	0	0
Bit	15	14	13	12	11	10	9	8	7	6	5	4	3	2	1	0
Name	GOOD_PKT_CNT5															
Type	RO															
Reset	0	0	0	0	0	0	0	0	0	0	0	0	0	0	0	0

Bit(s)	Name	Description
31:16	BAD_PKT_CNT5	**Port 5 Receive Bad Packet Counter**
15:0	GOOD_PKT_CNT5	**Port 5 Receive Good Packet Counter**

10110100 VUB0 VLAN Untag Block 0 00000000

Bit	31	30	29	28	27	26	25	24	23	22	21	20	19	18	17	16
Name					VLAN_3_UNTAG_EN							VLAN_2_UNTAG_EN[6:2]				
Type					RW							RW				
Reset					0	0	0	0	0	0	0	0	0	0	0	0
Bit	15	14	13	12	11	10	9	8	7	6	5	4	3	2	1	0
Name	VLAN_2_UNTAG_EN[1:0]		VLAN_1_UNTAG_EN							VLAN_0_UNTAG_EN						
Type	RW		RW							RW						
Reset	0	0	0	0	0	0	0	0	0	0	0	0	0	0	0	0

Bit(s)	Name	Description
27:21	VLAN_3_UNTAG_EN	**Port 0 ~ 6 untag_en of VLAN 3**
20:14	VLAN_2_UNTAG_EN	**Port 0 ~ 6 untag_en of VLAN 2**
13:7	VLAN_1_UNTAG_EN	**Port 0 ~ 6 untag_en of VLAN 1**
6:0	VLAN_0_UNTAG_EN	**Port 0 ~ 6 untag_en of VLAN 0**

MEDIATEK CONFIDENTIAL
FOR farrwang@wmnex.com.tw USE ONLY

This document contains information that is proprietary to MediaTek Inc.
Unauthorized reproduction or disclosure of this information in whole or in part is strictly prohibited.

10110104 **VUB1** **VLAN Untag Block 1** **00000000**

Bit	31	30	29	28	27	26	25	24	23	22	21	20	19	18	17	16
Name					VLAN_7_UNTAG_EN							VLAN_6_UNTAG_EN[6:2]				
Type					RW							RW				
Reset					0	0	0	0	0	0	0	0	0	0	0	0
Bit	15	14	13	12	11	10	9	8	7	6	5	4	3	2	1	0
Name	VLAN_6_UNTAG_EN[1:0]		VLAN_5_UNTAG_EN							VLAN_4_UNTAG_EN						
Type	RW		RW							RW						
Reset	0	0	0	0	0	0	0	0	0	0	0	0	0	0	0	0

Bit(s)	Name	Description
27:21	VLAN_7_UNTAG_EN	**Port 0 ~ 6 untag_en of VLAN 7**
20:14	VLAN_6_UNTAG_EN	**Port 0 ~ 6 untag_en of VLAN 6**
13:7	VLAN_5_UNTAG_EN	**Port 0 ~ 6 untag_en of VLAN 5**
6:0	VLAN_4_UNTAG_EN	**Port 0 ~ 6 untag_en of VLAN 4**

10110108 **VUB2** **VLAN Untag Block 2** **00000000**

Bit	31	30	29	28	27	26	25	24	23	22	21	20	19	18	17	16
Name					VLAN_11_UNTAG_EN							VLAN_10_UNTAG_EN[6:2]				
Type					RW							RW				
Reset					0	0	0	0	0	0	0	0	0	0	0	0
Bit	15	14	13	12	11	10	9	8	7	6	5	4	3	2	1	0
Name	VLAN_10_UNTAG_EN[1:0]		VLAN_9_UNTAG_EN							VLAN_8_UNTAG_EN						
Type	RW		RW							RW						
Reset	0	0	0	0	0	0	0	0	0	0	0	0	0	0	0	0

Bit(s)	Name	Description
27:21	VLAN_11_UNTAG_EN	**Port 0 ~ 6 untag_en of VLAN 11**
20:14	VLAN_10_UNTAG_EN	**Port 0 ~ 6 untag_en of VLAN 10**
13:7	VLAN_9_UNTAG_EN	**Port 0 ~ 6 untag_en of VLAN 9**
6:0	VLAN_8_UNTAG_EN	**Port 0 ~ 6 untag_en of VLAN 8**

1011010C **VUB3** **VLAN Untag Block 3** **00000000**

Bit	31	30	29	28	27	26	25	24	23	22	21	20	19	18	17	16
Name					VLAN_15_UNTAG_EN							VLAN_14_UNTAG_EN[6:2]				
Type					RW							RW				
Reset					0	0	0	0	0	0	0	0	0	0	0	0
Bit	15	14	13	12	11	10	9	8	7	6	5	4	3	2	1	0

MEDIATEK CONFIDENTIAL
FOR tarrwang@synnex.com.tw USE ONLY

This document contains information that is proprietary to MediaTek Inc.
Unauthorized reproduction or disclosure of this information in whole or in part is strictly prohibited.

Name	VLAN_14_UNTAG_EN[1:0]		VLAN_13_UNTAG_EN							VLAN_12_UNTAG_EN						
Type	RW		RW							RW						
Reset	0	0	0	0	0	0	0	0	0	0	0	0	0	0	0	0

Bit(s)	Name	Description
27:21	VLAN_15_UNTAG_EN	**Port 0 ~ 6 untag_en of VLAN 15**
20:14	VLAN_14_UNTAG_EN	**Port 0 ~ 6 untag_en of VLAN 14**
13:7	VLAN_13_UNTAG_EN	**Port 0 ~ 6 untag_en of VLAN 13**
6:0	VLAN_12_UNTAG_EN	**Port 0 ~ 6 untag_en of VLAN 12**

10110110 **BMU_CTRL** **BC/MC/UN Rate Limit Control** **7C000000**

Bit	31	30	29	28	27	26	25	24	23	22	21	20	19	18	17	16
Name		ONE_US_CYCLE_NUM								P5_RATE_LIMIT_CTRL				P4_RATE_LIMIT_CTRL		
Type		RW								RW				RW		
Reset		1	1	1	1	1	0	0		0	0	0		0	0	0
Bit	15	14	13	12	11	10	9	8	7	6	5	4	3	2	1	0
Name		P3_RATE_LIMIT_CTRL				P2_RATE_LIMIT_CTRL				P1_RATE_LIMIT_CTRL				P0_RATE_LIMIT_CTRL		
Type		RW				RW				RW				RW		
Reset		0	0	0		0	0	0		0	0	0		0	0	0

Bit(s)	Name	Description
30:24	ONE_US_CYCLE_NUM	**One micro-second Cycle Number** This field is used to calculate 1us period
22:20	P5_RATE_LIMIT_CTRL	**Port 5 rate Limit Control** (Note: This feature is only alid when port 5 GMAC is implemented)
18:16	P4_RATE_LIMIT_CTRL	**Port 4 rate Limit Control**
14:12	P3_RATE_LIMIT_CTRL	**Port 3 rate Limit Control**
10:8	P2_RATE_LIMIT_CTRL	**Port 2 rate Limit Control**
6:4	P1_RATE_LIMIT_CTRL	**Port 1 rate Limit Control**
2:0	P0_RATE_LIMIT_CTRL	**Port 0 rate Limit Control** 2: Broadcast frame enable 1: Multicast frame enable 0: Unknown frame enable

10110114 **BMU_LMT_NUM1** **BC/MC/UN Rate Limit Frame Number** **FFFFFFFF**

Bit	31	30	29	28	27	26	25	24	23	22	21	20	19	18	17	16
Name	RATE_LIMIT_NUM_100M															
Type	RW															
Reset	1	1	1	1	1	1	1	1	1	1	1	1	1	1	1	1

MEDIATEK CONFIDENTIAL
FOR fsrrwang@synnex.com.tw USE ONLY

This document contains information that is proprietary to MediaTek Inc.
Unauthorized reproduction or disclosure of this information in whole or in part is strictly prohibited.

Bit	15	14	13	12	11	10	9	8	7	6	5	4	3	2	1	0
Name	RATE_LIMIT_NUM_10M															
Type	RW															
Reset	1	1	1	1	1	1	1	1	1	1	1	1	1	1	1	1

Bit(s)	Name	Description
31:16	RATE_LIMIT_NUM_100M	**Rate Limit Received BC/MC/UN frame number in 100M in 100ms duration**
15:0	RATE_LIMIT_NUM_10M	**Rate Limit Received BC/MC/UN frame number in 10M in 1s duration**

10110118 **BMU_LMT_NUM2** **BC/MC/UN Rate Limit Frame Number** **1818FFFF**

Bit	31	30	29	28	27	26	25	24	23	22	21	20	19	18	17	16
Name	IG_RATE_BYTE_OPT	IG_RATE_BYTE_NUM							EG_RATE_BYTE_OPT	EG_RATE_BYTE_NUM						
Type	RW	RW							RW	RW						
Reset	0	0	0	1	1	0	0	0	0	0	0	1	1	0	0	0
Bit	15	14	13	12	11	10	9	8	7	6	5	4	3	2	1	0
Name	RATE_LIMIT_NUM_1000M															
Type	RW															
Reset	1	1	1	1	1	1	1	1	1	1	1	1	1	1	1	1

Bit(s)	Name	Description
31	IG_RATE_BYTE_OPT	**Ingress Rate Byte Option** 0: Add 1: Minus
30:24	IG_RATE_BYTE_NUM	**Ingress Rate Byte Number**
23	EG_RATE_BYTE_OPT	**Egress Rate Byte Option** 0: Add 1: Minus
22:16	EG_RATE_BYTE_NUM	**Egress Rate Byte Number**
15:0	RATE_LIMIT_NUM_1000M	**Rate Limit Received BC/MC/UN frame number in 1000M in 10ms duration** (note: This feature is only valid whe port 5 GMAC is implemented))

1011011C **P01_ING_CTRL** **Port 0&1 Ingress Rate Limit Control** **00000000**

Bit	31	30	29	28	27	26	25	24	23	22	21	20	19	18	17	16
Name		P1_INGRESS_CTRL	P1_MNG_PKT_BYPASS	P1_INGRESS_FLOW_CTRL_ON	P1_TIMER_TICK		P1_TOKEN									

This document contains information that is proprietary to MediaTek Inc.
Unauthorized reproduction or disclosure of this information in whole or in part is strictly prohibited.
MEDIATEK CONFIDENTIAL FOR fanwang@synnex.com.tw USE ONLY

Type		RW	RW	RW	RW		RW									
Reset		0	0	0	0	0	0	0	0	0	0	0	0	0	0	0
Bit	15	14	13	12	11	10	9	8	7	6	5	4	3	2	1	0
Name		P0_INGRESS_CTRL	P0_MNG_PKT_BYPASS	P0_INGRESS_FLOW_CTRL_ON	P0_TIMER_TICK		P0_TOKEN									
Type		RW	RW	RW	RW		RW									
Reset		0	0	0	0	0	0	0	0	0	0	0	0	0	0	0

Bit(s)	Name	Description
30	P1_INGRESS_CTRL	**Port1 Ingress Limit Control** 0: OFF 1: ON
29	P1_MNG_PKT_BYPASS	**Port1 Management Packet ByPass** 0: All packet included 1: Mangement Frame Excluded
28	P1_INGRESS_FLOW_CTRL_ON	**Port 1 Ingress rate Flow Control** When the bit is set, the pause frame is used prior to packet dropped according to P1_ING_THRES. If the bucket is empty, then P1 will start to discard the received packets except those specific packet in P1_MNG_PKY_BYPASS mode. 0: OFF 1: ON
27:26	P1_TIMER_TICK	**Port 1 Timer Tick** 0: 512us 1: 128us 2: 32us 3: 8us
25:16	P1_TOKEN	**Port 1 Token** Every timer tick, Token number bytes will be added into the bucket. (Unit : Byte) The maximum space of this bucket is 16'hFFFF bytes
14	P0_INGRESS_CTRL	**Port 0 Ingress Limit Control** 0: OFF 1: ON
13	P0_MNG_PKT_BYPASS	**Port 0 Management Packet ByPass** 0: All packet included 1: Mangement Frame Excluded
12	P0_INGRESS_FLOW_CTRL_ON	**Port 0 Ingress rate Flow Control** When the bit is set, the pause frame is used prior to packet dropped according to P0_ING_THRES. If the bucket is empty, then P0 will start to discard the received packets except those specific packet in P0_MNG_PKY_BYPASS mode. 0: OFF 1: ON
11:10	P0_TIMER_TICK	**Port 0 Timer Tick** 0: 512us 1: 128us 2: 32us 3: 8us
9:0	P0_TOKEN	**Port 0 Token** Every timer tick, Token number bytes will be added into the bucket. (Unit : Byte)

MEDIATEK CONFIDENTIAL
FOR fanrwang@symnex.com.tw USE ONLY

© 2014 MediaTek Inc.

This document contains information that is proprietary to MediaTek Inc.
Unauthorized reproduction or disclosure of this information in whole or in part is strictly prohibited.

Bit(s)	Name	Description
		The maximum space of this bucket is 16'hFFFF bytes

10110120 **P23_ING_CTRL** **Port 2&3 Ingress Rate Limit Control** **00000000**

Bit	31	30	29	28	27	26	25	24	23	22	21	20	19	18	17	16
Name		P3_INGRESS_CTRL	P3_MNG_PKT_BYPASS	P3_INGRESS_FLOW_CTRL_ON	P3_TIMER_TICK		P3_TOKEN									
Type		RW	RW	RW	RW		RW									
Reset		0	0	0	0	0	0	0	0	0	0	0	0	0	0	0
Bit	15	14	13	12	11	10	9	8	7	6	5	4	3	2	1	0
Name		P2_INGRESS_CTRL	P2_MNG_PKT_BYPASS	P2_INGRESS_FLOW_CTRL_ON	P2_TIMER_TICK		P2_TOKEN									
Type		RW	RW	RW	RW		RW									
Reset		0	0	0	0	0	0	0	0	0	0	0	0	0	0	0

Bit(s)	Name	Description
30	P3_INGRESS_CTRL	**Port 3 Ingress Limit Control** 0: OFF 1: ON
29	P3_MNG_PKT_BYPASS	**Port 3 Management Packet ByPass** 0: All packet included 1: Mangement Frame Excluded
28	P3_INGRESS_FLOW_CTRL_ON	**Port 3 Ingress rate Flow Control** When the bit is set, the pause frame is used prior to packet dropped according to P3_ING_THRES. If the bucket is empty, then P3 will start to discard the received packets except those specific packet in P3 MNG_PKY_BYPASS mode. 0: OFF 1: ON
27:26	P3_TIMER_TICK	**Port 3 Timer Tick** 0: 512us 1: 128us 2: 32us 3: 8us
25:16	P3_TOKEN	**Port 3 Token** Every timer tick, Token number bytes will be added into the bucket. (Unit : Byte) The maximum space of this bucket is 16'hFFFF bytes
14	P2_INGRESS_CTRL	**Port 2 Ingress Limit Control** 0: OFF 1: ON
13	P2_MNG_PKT_BYPASS	**Port 2 Management Packet ByPass** 0: All packet included

MEDIATEK CONFIDENTIAL
FOR farrwanee@synnex.com.tw USE ONLY

This document contains information that is proprietary to MediaTek Inc.
Unauthorized reproduction or disclosure of this information in whole or in part is strictly prohibited.

Bit(s)	Name	Description
		1: Mangement Frame Excluded
12	P2_INGRESS_FLOW_CTRL_ON	**Port 2 Ingress rate Flow Control** When the bit is set, the pause frame is used prior to packet dropped according to P2_ING_THRES. If the bucket is empty, then P2 will start to discard the received packets except those specific packet in P2_MNG_PKY_BYPASS mode. 0: OFF 1: ON
11:10	P2_TIMER_TICK	**Port 2 Timer Tick** 0: 512us 1: 128us 2: 32us 3: 8us
9:0	P2_TOKEN	**Port 2 Token** Every timer tick, Token number bytes will be added into the bucket. (Unit : Byte) The maximum space of this bucket is 16'hFFFF bytes

10110124 **P45_ING_CTRL** **Port 4&5 Ingress Rate Limit Control** **00000000**

Bit	31	30	29	28	27	26	25	24	23	22	21	20	19	18	17	16
Name		P5_INGRESS_CTRL	P5_MNG_PKT_BYPASS	P5_INGRESS_FLOW_CTRL_ON	P5_TIMER_TICK		P5_TOKEN									
Type		RW	RW	RW	RW		RW									
Reset		0	0	0	0	0	0	0	0	0	0	0	0	0	0	0
Bit	15	14	13	12	11	10	9	8	7	6	5	4	3	2	1	0
Name		P4_INGRESS_CTRL	P4_MNG_PKT_BYPASS	P4_INGRESS_FLOW_CTRL_ON	P4_TIMER_TICK		P4_TOKEN									
Type		RW	RW	RW	RW		RW									
Reset		0	0	0	0	0	0	0	0	0	0	0	0	0	0	0

Bit(s)	Name	Description
30	P5_INGRESS_CTRL	**Port 5 Ingress Limit Control** 0: OFF 1: ON
29	P5_MNG_PKT_BYPASS	**Port 5 Management Packet ByPass** 0: All packet included 1: Mangement Frame Excluded
28	P5_INGRESS_FLOW_CTRL_ON	**Port 5 Ingress rate Flow Control** When the bit is set, the pause frame is used prior to packet dropped according to P5_ING_THRES. If the bucket is empty, then P5 will start to discard the received packets except those specific packet in P5_MNG_PKY_BYPASS mode.

MEDIATEK CONFIDENTIAL
FOR farwang@symnex.com.tw USE ONLY

This document contains information that is proprietary to MediaTek Inc.
Unauthorized reproduction or disclosure of this information in whole or in part is strictly prohibited.

Bit(s)	Name	Description
		0: OFF 1: ON
27:26	P5_TIMER_TICK	**Port 5 Timer Tick** 0: 512us 1: 128us 2: 32us 3: 8us
25:16	P5_TOKEN	**Port 5 Token** Every timer tick, Token number bytes will be added into the bucket. (Unit : Byte) The maximum space of this bucket is 16'hFFFF bytes
14	P4_INGRESS_CTRL	**Port 4 Ingress Limit Control** 0: OFF 1: ON
13	P4_MNG_PKT_BYPASS	**Port 4 Management Packet ByPass** 0: All packet included 1: Mangement Frame Excluded
12	P4_INGRESS_FLOW_CTRL_ON	**Port 4 Ingress rate Flow Control** When the bit is set, the pause frame is used prior to packet dropped according to P4_ING_THRES. If the bucket is empty, then P4 will start to discard the received packets except those specific packet in P4_MNG_PKY_BYPASS mode. 0: OFF 1: ON
11:10	P4_TIMER_TICK	**Port 4 Timer Tick** 0: 512us 1: 128us 2: 32us 3: 8us
9:0	P4_TOKEN	**Port 4 Token** Every timer tick, Token number bytes will be added into the bucket. (Unit : Byte) The maximum space of this bucket is 16'hFFFF bytes

10110128 **P0_ING_THRES** **Port 0 Ingress Rate Limit Threshold** **AAAA5555**

Bit	31	30	29	28	27	26	25	24	23	22	21	20	19	18	17	16
Name	P0_IN_FCOFF_THRES															
Type	RW															
Reset	1	0	1	0	1	0	1	0	1	0	1	0	1	0	1	0
Bit	15	14	13	12	11	10	9	8	7	6	5	4	3	2	1	0
Name	P0_IN_FCON_THRES															
Type	RW															
Reset	0	1	0	1	0	1	0	1	0	1	0	1	0	1	0	1

Bit(s)	Name	Description
31:16	P0_IN_FCOFF_THRES	**Port 0 ingress rate limit flow control off.** If P0_INGRESS_FLOW_CTRL_ON = 1 and P0 Flow control capability is on (XFC status in 0x80), then P0 will initiate PAUSE OFF frame or stop backpressure.
15:0	P0_IN_FCON_THRES	**Port 0 ingress rate limit flow control on.** If P0_INGRESS_FLOW_CTRL_ON = 1 and P0 Flow control capability is on (XFC status in 0x80), then P0 will initiate PAUSE ON frame or backpressure.

MEDIATEK CONFIDENTIAL
FOR farrwang@synnex.com.tw USE ONLY

This document contains information that is proprietary to MediaTek Inc.
Unauthorized reproduction or disclosure of this information in whole or in part is strictly prohibited.

1011012C **P1_ING_THRES** **Port 1 Ingress Rate Limit Threshold** **AAAA5555**

Bit	31	30	29	28	27	26	25	24	23	22	21	20	19	18	17	16
Name	P1_IN_FCOFF_THRES															
Type	RW															
Reset	1	0	1	0	1	0	1	0	1	0	1	0	1	0	1	0
Bit	15	14	13	12	11	10	9	8	7	6	5	4	3	2	1	0
Name	P1_IN_FCON_THRES															
Type	RW															
Reset	0	1	0	1	0	1	0	1	0	1	0	1	0	1	0	1

Bit(s)	Name	Description
31:16	P1_IN_FCOFF_THRES	**Port 1 ingress rate limit flow control off.** If P1_INGRESS_FLOW_CTRL_ON = 1 and P1 Flow control capability is on (XFC status in 0x80), then P2 will initiate PAUSE OFF frame or stop backpressure.
15:0	P1_IN_FCON_THRES	**Port 1 ingress rate limit flow control on.** If P1_INGRESS_FLOW_CTRL_ON = 1 and P1 Flow control capability is on (XFC status in 0x80), then P1 will initiate PAUSE ON frame or backpressure.

10110130 **P2_ING_THRES** **Port 2 Ingress Rate Limit Threshold** **AAAA5555**

Bit	31	30	29	28	27	26	25	24	23	22	21	20	19	18	17	16
Name	P2_IN_FCOFF_THRES															
Type	RW															
Reset	1	0	1	0	1	0	1	0	1	0	1	0	1	0	1	0
Bit	15	14	13	12	11	10	9	8	7	6	5	4	3	2	1	0
Name	P2_IN_FCON_THRES															
Type	RW															
Reset	0	1	0	1	0	1	0	1	0	1	0	1	0	1	0	1

Bit(s)	Name	Description
31:16	P2_IN_FCOFF_THRES	**Port 2 ingress rate limit flow control off.** If P2_INGRESS_FLOW_CTRL_ON = 1 and P2 Flow control capability is on (XFC status in 0x80), then P2 will initiate PAUSE OFF frame or stop backpressure.
15:0	P2_IN_FCON_THRES	**Port 2 ingress rate limit flow control on.** If P2_INGRESS_FLOW_CTRL_ON = 1 and P2 Flow control capability is on (XFC status in 0x80), then P2 will initiate PAUSE ON frame or backpressure.

10110134 **P3_ING_THRES** **Port 3 Ingress Rate Limit Threshold** **AAAA5555**

Bit	31	30	29	28	27	26	25	24	23	22	21	20	19	18	17	16
Name	P3_IN_FCOFF_THRES															
Type	RW															
Reset	1	0	1	0	1	0	1	0	1	0	1	0	1	0	1	0
Bit	15	14	13	12	11	10	9	8	7	6	5	4	3	2	1	0
Name	P3_IN_FCON_THRES															
Type	RW															
Reset	0	1	0	1	0	1	0	1	0	1	0	1	0	1	0	1

FOR MEDIATEK CONFIDENTIAL
FOR hardwareengineer.com.tw USE ONLY

This document contains information that is proprietary to MediaTek Inc.
Unauthorized reproduction or disclosure of this information in whole or in part is strictly prohibited.

Bit(s)	Name	Description
31:16	P3_IN_FCOFF_THRES	**Port 3 ingress rate limit flow control off.** If P3_INGRESS_FLOW_CTRL_ON = 1 and P3 Flow control capability is on (XFC status in 0x80), then P3 will initiate PAUSE OFF frame or stop backpressure.
15:0	P3_IN_FCON_THRES	**Port 3 ingress rate limit flow control on.** If P3_INGRESS_FLOW_CTRL_ON = 1 and P3 Flow control capability is on (XFC status in 0x80), then P3 will initiate PAUSE ON frame or backpressure.

10110138 **P4_ING_THRES** **Port 4 Ingress Rate Limit Threshold** **AAAA5555**

Bit	31	30	29	28	27	26	25	24	23	22	21	20	19	18	17	16
Name	P4_IN_FCOFF_THRES															
Type	RW															
Reset	1	0	1	0	1	0	1	0	1	0	1	0	1	0	1	0
Bit	15	14	13	12	11	10	9	8	7	6	5	4	3	2	1	0
Name	P4_IN_FCON_THRES															
Type	RW															
Reset	0	1	0	1	0	1	0	1	0	1	0	1	0	1	0	1

Bit(s)	Name	Description
31:16	P4_IN_FCOFF_THRES	**Port 4 ingress rate limit flow control off.** If P4_INGRESS_FLOW_CTRL_ON = 1 and P4 Flow control capability is on (XFC status in 0x80), then P4 will initiate PAUSE OFF frame or stop backpressure.
15:0	P4_IN_FCON_THRES	**Port 4 ingress rate limit flow control on.** If P4_INGRESS_FLOW_CTRL_ON = 1 and P4 Flow control capability is on (XFC status in 0x80), then P4 will initiate PAUSE ON frame or backpressure.

1011013C **P5_ING_THRES** **Port 5 Ingress Rate Limit Threshold** **AAAA5555**

Bit	31	30	29	28	27	26	25	24	23	22	21	20	19	18	17	16
Name	P5_IN_FCOFF_THRES															
Type	RW															
Reset	1	0	1	0	1	0	1	0	1	0	1	0	1	0	1	0
Bit	15	14	13	12	11	10	9	8	7	6	5	4	3	2	1	0
Name	P5_IN_FCON_THRES															
Type	RW															
Reset	0	1	0	1	0	1	0	1	0	1	0	1	0	1	0	1

Bit(s)	Name	Description
31:16	P5_IN_FCOFF_THRES	**Port 5 ingress rate limit flow control off.** If P5_INGRESS_FLOW_CTRL_ON = 1 and P5 Flow control capability is on (XFC status in 0x80), then P5 will initiate PAUSE OFF frame or stop backpressure. (note: This feature is only valid when port 5 Giga MAC is implemented)
15:0	P5_IN_FCON_THRES	**Port 5 ingress rate limit flow control on.** If P5_INGRESS_FLOW_CTRL_ON = 1 and P0 Flow control capability is on (XFC status in 0x80), then P5 will initiate PAUSE ON frame or backpressure. (note: This feature is only valid when port 5 Giga MAC is implemented)

MEDIATEK CONFIDENTIAL
FOR farrwang@synnex.com.tw USE ONLY

This document contains information that is proprietary to MediaTek Inc.
Unauthorized reproduction or disclosure of this information in whole or in part is strictly prohibited.

10110140 **P01_EG_CTRL** **Port 0/1 Egress Rate Limit Control** **00000000**

Bit	31	30	29	28	27	26	25	24	23	22	21	20	19	18	17	16
Name				P1_EGRESS_CTRL	P1_TIMER_TICK		P1_TOKEN									
Type				RW	RW		RW									
Reset				0	0	0	0	0	0	0	0	0	0	0	0	0
Bit	15	14	13	12	11	10	9	8	7	6	5	4	3	2	1	0
Name				P0_EGRESS_CTRL	P0_TIMER_TICK		P0_TOKEN									
Type				RW	RW		RW									
Reset				0	0	0	0	0	0	0	0	0	0	0	0	0

Bit(s)	Name	Description
28	P1_EGRESS_CTRL	**Port 1 Egress Control** 1: ON 0: OFF
27:26	P1_TIMER_TICK	**Port 1 Timer Tick** 0: 512us 1: 128us 2: 32us 3: 8us
25:16	P1_TOKEN	**Port 1 Token** Every timer tick, Token number bytes will be added into the bucket. (Unit : Byte) The maximum space of this bucket is 16'hFFFF bytes 1: ON 0: OFF
12	P0_EGRESS_CTRL	**Port 0 Egress Control** 0: 512us 1: 128us 2: 32us 3: 8us
11:10	P0_TIMER_TICK	**Port 0 Timer Tick** 1: ON 0: OFF
9:0	P0_TOKEN	**Port 0 Token** Every timer tick, Token number bytes will be added into the bucket. (Unit : Byte) The maximum space of this bucket is 16'hFFFF bytes

10110144 **P23_EG_CTRL** **Port 2/3 Egress Rate Limit Control** **00000000**

Bit	31	30	29	28	27	26	25	24	23	22	21	20	19	18	17	16
Name				P3_EGRESS_CT	P3_TIMER_TICK		P3_TOKEN									

FOR MEDIATEK CONFIDENTIAL
fanrwang@synnex.com.tw USE ONLY

This document contains information that is proprietary to MediaTek Inc.
Unauthorized reproduction or disclosure of this information in whole or in part is strictly prohibited.

				RL												
Type				RW	RW		RW									
Reset				0	0	0	0	0	0	0	0	0	0	0	0	0
Bit	15	14	13	12	11	10	9	8	7	6	5	4	3	2	1	0
Name				P2_EGRESS_CTRL	P2_TIMER_TICK		P2_TOKEN									
Type				RW	RW		RW									
Reset				0	0	0	0	0	0	0	0	0	0	0	0	0

Bit(s)	Name	Description
28	P3_EGRESS_CTRL	**Port 3 Egress Control** 1: ON 0: OFF
27:26	P3_TIMER_TICK	**Port 3 Timer Tick** 0: 512us 1: 128us 2: 32us 3: 8us
25:16	P3_TOKEN	**Port 3 Token** Every timer tick, Token number bytes will be added into the bucket. (Unit : Byte) The maximum space of this bucket is 16'hFFFF bytes 1: ON 0: OFF
12	P2_EGRESS_CTRL	**Port 2 Egress Control** 0: 512us 1: 128us 2: 32us 3: 8us
11:10	P2_TIMER_TICK	**Port 2 Timer Tick** 1: ON 0: OFF
9:0	P2_TOKEN	**Port 2 Token** Every timer tick, Token number bytes will be added into the bucket. (Unit : Byte) The maximum space of this bucket is 16'hFFFF bytes

10110148 **P45_EG_CTRL** **Port 4/5 Egress Rate Limit Control** **00000000**

Bit	31	30	29	28	27	26	25	24	23	22	21	20	19	18	17	16
Name				P5_EGRESS_CTRL	P5_TIMER_TICK		P5_TOKEN									
Type				RW	RW		RW									
Reset				0	0	0	0	0	0	0	0	0	0	0	0	0
Bit	15	14	13	12	11	10	9	8	7	6	5	4	3	2	1	0
Name				P4_EGRESS_CTRL	P4_TIMER_TICK		P4_TOKEN									

MEDIATEK CONFIDENTIAL
FOR fartwang@synnex.com.tw USE ONLY

This document contains information that is proprietary to MediaTek Inc.
Unauthorized reproduction or disclosure of this information in whole or in part is strictly prohibited.

Type				RW	RW		RW									
Reset				0	0	0	0	0	0	0	0	0	0	0	0	0

Bit(s)	Name	Description
28	P5_EGRESS_CTRL	**Port 5 Egress Control** (Note: This feature is only valid when port 5 Giga MAC is implemented) 1: ON 0: OFF
27:26	P5_TIMER_TICK	**Port 5 Timer Tick** (Note: This feature is only valid when port 5 Giga MAC is implemented) 0: 512us 1: 128us 2: 32us 3: 8us
25:16	P5_TOKEN	**Port 5 Token** Every timer tick, Token number bytes will be added into the bucket. (Unit : Byte) The maximum space of this bucket is 16'hFFFF bytes (Note: This feature is only valid when port 5 Giga MAC is implemented) 1: ON 0: OFF
12	P4_EGRESS_CTRL	**Port 4 Egress Control** 0: 512us 1: 128us 2: 32us 3: 8us
11:10	P4_TIMER_TICK	**Port 4 Timer Tick** 1: ON 0: OFF
9:0	P4_TOKEN	**Port 4 Token** Every timer tick, Token number bytes will be added into the bucket. (Unit : Byte) The maximum space of this bucket is 16'hFFFF bytes

1011014C **PCRI** **Packet Counter Recycle Indication** **00000000**

Bit	31	30	29	28	27	26	25	24	23	22	21	20	19	18	17	16
Name	PKT_CNT_CLR		TCOL_PKT_REC							TXOK_PKT_REC						
Type	WO		RO							RO						
Reset	0		0	0	0	0	0	0		0	0	0	0	0	0	0
Bit	15	14	13	12	11	10	9	8	7	6	5	4	3	2	1	0
Name			BAD_PKT_REC							GOOD_PKT_REC						
Type			RO							RO						
Reset			0	0	0	0	0	0		0	0	0	0	0	0	0

Bit(s)	Name	Description
31	PKT_CNT_CLR	**Tx/Rx Packet Counters Write One Clear** When this bit is set,all Tx/Rx packet counters will be clear.This bit can be self-clear automatically.
29:24	TCOL_PKT_REC	**Per Port Transmitted Collision Packet Counter Recycle** This bit indicates that the per port transmitted collision packet counter recycles the count. Write one clear.

MEDIATEK CONFIDENTIAL
FOR fanrwang@symnex.com FW USE ONLY

This document contains information that is proprietary to MediaTek Inc.
Unauthorized reproduction or disclosure of this information in whole or in part is strictly prohibited.

Bit(s)	Name	Description
22:16	TXOK_PKT_REC	**Per Port Transmitted Good Packet Counter Recycle** This bit indicates that the per port transmitted good packet counter recycles the count. Write one clear.
13:8	BAD_PKT_REC	**Per Port Received Bad Packet Counter Recycle** This bit indicates that the per port received badd packet counter recycles the count. Write one clear.
6:0	GOOD_PKT_REC	**Per Port Received Good Packet Counter Recycle** This bit indicates that the per port received good packet counter recycles the count. Write one clear.

10110150 **P0TPC** **Port 0 TX Packet Counter** **00000000**

Bit	31	30	29	28	27	26	25	24	23	22	21	20	19	18	17	16
Name	BAD_PKT_CNT0															
Type	RO															
Reset	0	0	0	0	0	0	0	0	0	0	0	0	0	0	0	0
Bit	15	14	13	12	11	10	9	8	7	6	5	4	3	2	1	0
Name	GOOD_PKT_CNT0															
Type	RO															
Reset	0	0	0	0	0	0	0	0	0	0	0	0	0	0	0	0

Bit(s)	Name	Description
31:16	BAD_PKT_CNT0	**Port 0 packet counte for transmitted packets with collisionautomatically.**
15:0	GOOD_PKT_CNT0	**Port 0 packet counter for transmitted packets successfully**

10110154 **P1TPC** **Port 1 TX Packet Counter** **00000000**

Bit	31	30	29	28	27	26	25	24	23	22	21	20	19	18	17	16
Name	BAD_PKT_CNT1															
Type	RO															
Reset	0	0	0	0	0	0	0	0	0	0	0	0	0	0	0	0
Bit	15	14	13	12	11	10	9	8	7	6	5	4	3	2	1	0
Name	GOOD_PKT_CNT1															
Type	RO															
Reset	0	0	0	0	0	0	0	0	0	0	0	0	0	0	0	0

Bit(s)	Name	Description
31:16	BAD_PKT_CNT1	**Port 1 packet counte for transmitted packets with collisionautomatically.**
15:0	GOOD_PKT_CNT1	**Port 1 packet counter for transmitted packets successfully**

10110158 **P2TPC** **Port 2 TX Packet Counter** **00000000**

Bit	31	30	29	28	27	26	25	24	23	22	21	20	19	18	17	16
Name	BAD_PKT_CNT2															
Type	RO															
Reset	0	0	0	0	0	0	0	0	0	0	0	0	0	0	0	0
Bit	15	14	13	12	11	10	9	8	7	6	5	4	3	2	1	0

MEDIATEK CONFIDENTIAL
FOR farrwang@symnex.com.tw USE ONLY

This document contains information that is proprietary to MediaTek Inc.
Unauthorized reproduction or disclosure of this information in whole or in part is strictly prohibited.

Name	GOOD_PKT_CNT2															
Type	RO															
Reset	0	0	0	0	0	0	0	0	0	0	0	0	0	0	0	0

Bit(s)	Name	Description
31:16	BAD_PKT_CNT2	**Port 2 packet counte for transmitted packets with collisionautomatically.**
15:0	GOOD_PKT_CNT2	**Port 2 packet counter for transmitted packets successfully**

1011015C P3TPC Port 3 TX Packet Counter 00000000

Bit	31	30	29	28	27	26	25	24	23	22	21	20	19	18	17	16
Name	BAD_PKT_CNT3															
Type	RO															
Reset	0	0	0	0	0	0	0	0	0	0	0	0	0	0	0	0
Bit	15	14	13	12	11	10	9	8	7	6	5	4	3	2	1	0
Name	GOOD_PKT_CNT3															
Type	RO															
Reset	0	0	0	0	0	0	0	0	0	0	0	0	0	0	0	0

Bit(s)	Name	Description
31:16	BAD_PKT_CNT3	**Port 3 packet counte for transmitted packets with collisionautomatically.**
15:0	GOOD_PKT_CNT3	**Port 3 packet counter for transmitted packets successfully**

10110160 P4TPC Port 4 TX Packet Counter 00000000

Bit	31	30	29	28	27	26	25	24	23	22	21	20	19	18	17	16
Name	BAD_PKT_CNT4															
Type	RO															
Reset	0	0	0	0	0	0	0	0	0	0	0	0	0	0	0	0
Bit	15	14	13	12	11	10	9	8	7	6	5	4	3	2	1	0
Name	GOOD_PKT_CNT4															
Type	RO															
Reset	0	0	0	0	0	0	0	0	0	0	0	0	0	0	0	0

Bit(s)	Name	Description
31:16	BAD_PKT_CNT4	**Port 4 packet counte for transmitted packets with collisionautomatically.**
15:0	GOOD_PKT_CNT4	**Port 4 packet counter for transmitted packets successfully**

10110164 P5TPC Port 5 TX Packet Counter 00000000

Bit	31	30	29	28	27	26	25	24	23	22	21	20	19	18	17	16
Name	BAD_PKT_CNT5															
Type	RO															
Reset	0	0	0	0	0	0	0	0	0	0	0	0	0	0	0	0
Bit	15	14	13	12	11	10	9	8	7	6	5	4	3	2	1	0
Name	GOOD_PKT_CNT5															
Type	RO															
Reset	0	0	0	0	0	0	0	0	0	0	0	0	0	0	0	0

MEDIATEK CONFIDENTIAL
FOR taiwans@synnex.com.tw USE ONLY

This document contains information that is proprietary to MediaTek Inc.
Unauthorized reproduction or disclosure of this information in whole or in part is strictly prohibited.

Bit(s)	Name	Description
31:16	BAD_PKT_CNT5	**Port 5 packet counte for transmitted packets with collisionautomatically.** (Note: This feature is only valid when port 5 Giga MAC is implemented)
15:0	GOOD_PKT_CNT5	**Port 5 packet counter for transmitted packets successfully** (Note: This feature is only valid when port 5 Giga MAC is implemented)

10110168 **LEDC** **LED Control** **00E00000**

Bit	31	30	29	28	27	26	25	24	23	22	21	20	19	18	17	16
Name	OLT_MODE							EPHY_GPIO_8_5				EPHY_GPIO_4_0				
Type	RW							RW				RW				
Reset	0							0	1	1	1	0	0	0	0	0
Bit	15	14	13	12	11	10	9	8	7	6	5	4	3	2	1	0
Name						LED_SEL						LED_POLARITY				
Type						RW						RW				
Reset						0	0	0				0	0	0	0	0

Bit(s)	Name	Description
31	OLT_MODE	**EPHY OLT Mode** 0: Disable 1: Enable
24:21	EPHY_GPIO_8_5	**EPHY GPIO[8:5]** EPHY_GPIO[8:5] is used to set EPHY initial state which is latched by EPHY SW reset.
20:16	EPHY_GPIO_4_0	**EPHY GPIO[4:0]** EPHY_GPIO[4:0] is used to set EPHY MDIO address which is latched by EPHY SW reset.
10:8	LED_SEL	**LED Source** 0: ESW LED Control 1: EPHY LED Control[0] 2: EPHY LED Control[1] 3: EPHY LED Control[2]
4:0	LED_POLARITY	**Per Port LED Polarity Control** 0: Low Active 1: High Active

MEDIATEK CONFIDENTIAL
FOR farrwang@synnex.com.tw USE ONLY

This document contains information that is proprietary to MediaTek Inc.
Unauthorized reproduction or disclosure of this information in whole or in part is strictly prohibited.

2.20 MSDC

2.20.1 Registers

Module name: MSDC Base address: (+10130000h)

Address	Name	Width	Register Function
10130000	MSDC_CFG	32	**MSDC Configuration Register** The register is for general configuration of the MS/SD controller.
10130004	MSDC_IOCON	32	**MSDC IO Configuration Register** The register contains the receiver path data latch timing control and interface control bits.
10130008	MSDC_PS	32	**MSDC Pin Status Register** The register is used to storing card detection and write protection pin status. Card detection status can be disabled.
1013000C	MSDC_INT	32	**MSDC Interrupt Register** The register contains the status of interrupts. Note that the register still shows the status of interrupt even though the interrupt is disabled.
10130010	MSDC_INTEN	32	**MSDC Interrupt Enable Register** The register contains the related enable bit of interrupts.
10130014	MSDC_FIFOCS	32	**MSDC FIFO Control and Status Register** The register contains the control and status of embedded 128B FIFO.
10130018	MSDC_TXDATA	32	**MSDC TX Data Port Register** The register is for PIO mode only. Used to input MSDC write data to card. The access can be AHB 1B/2B/4B
1013001C	MSDC_RXDATA	32	**MSDC RX Data Port Register** The register is for PIO mode only. Used to read back MSDC read data from card. The access can be AHB 1B/2B/4B.
10130030	SDC_CFG	32	**SD Configuration Register** The register is used for configuring the MS/SD Memory Card Controller when it is configured as the host of SD Memory Card. If the controller is configured as the host of Memory Stick, the contents of the register have no impact on the operation of the controller.
10130034	SDC_CMD	32	**SD Command Register** The register defines a SD Memory Card command and its attributes. Before MS/SD controller issues a transaction onto SD bus, application shall specify other relative settings such as argument for command. After writing the register by the application, MS/SD controller will issue the corresponding transaction onto SD serial bus. If the command is GO_IDLE_STATE, the controller will have serial clock on SD/MMC bus run 128 cycles before issuing the command.
10130038	SDC_ARG	32	**SD Argument Register** The register contains the argument of the SD/MMC Memory Card command.
1013003C	SDC_STS	32	**SD Status Register** The register reflects SD bus status and contains MMC stream write status.
10130040	SDC_RESP0	32	**SD Response Register 0** The register contains parts of the last SD/MMC Memory Card bus response. See description for the register field SDC_RESP3.
10130044	SDC_RESP1	32	**SD Response Register 1** The register contains parts of the last SD/MMC Memory Card bus response. See description for the register field SDC_RESP3.
10130048	SDC_RESP2	32	**SD Response Register 2**

MEDIATEK CONFIDENTIAL
FOR fanwang@sunnet.com.tw USE ONLY

This document contains information that is proprietary to MediaTek Inc.
Unauthorized reproduction or disclosure of this information in whole or in part is strictly prohibited.

			The register contains parts of the last SD/MMC Memory Card bus response. See description for the register field SDC_RESP3.
1013004C	**SDC_RESP3**	32	**SD Response Register 3** The register contains parts of the last SD/MMC Memory Card bus response. The register fields SDC_RESP0, SDC_RESP1, SDC_RESP2 and SDC_RESP3 are composed of the last SD/MMC Memory card bus response. For response of type R2, that is, response of the command ALL_SEND_CID, SEND_CSD and SEND_CID, only bit 127 to 0 of response token is stored in the register field SDC_RESP0, SDC_RESP1, SDC_RESP2 and SDC_RESP3. SDC_RESP0 = bit 31~0 SDC_RESP1 = bit 63~32 SDC_RESP2 = bit 95~64 SDC_RESP3 = bit 127~96 For response of type R1b in auto CMD12 or R1 in auto CMD23, bit 39 to 8 of response token is stored in the register field of SDC_RESP3. For the responses of other types, only bit 39 to 8 of response token is stored in the register field SDC_RESP0.
10130050	**SDC_BLK_NUM**	32	**SD Block Number Register** This register defines the block number for the block transaction. For single read/write, this register should be set to 1. For multiple read/write, this register should be set to larger than 1. Set to 0 will cause unexpected result.
10130058	**SDC_CSTS**	32	**SD Card Status Register** After commands with R1 and R1b response, this register will contain the status of the SD/MMC card
1013005C	**SDC_CSTS_EN**	32	**SD Card Status Enable Register** This register is used to control which bit of the SDC_CSTS will generate the MSDC_INT.SD_CSTA interrupt.
10130060	**SDC_DATCRC_STS**	32	**SD Card Data CRC Status Register** This register reflects the CRC status of data line[7:0]. This register is only for MSDC Read
10130080	**SD_ACMD_RESP**	32	**SD ACMD Response Register** This register stores the response of auto command from SD card
10130090	**DMA_SA**	32	**DMA Start Address Register** This register contains the start address of the DMA descriptor
10130094	**DMA_CA**	32	**DMA Current Address Register** This register contains the current DMA address
10130098	**DMA_CTRL**	32	**DMA Control Register** This register is used to control the DMA operation.
1013009C	**DMA_CFG**	32	**DMA Configuration Register** This register is used to configure the DMA operation.
101300A0	**SW_DBG_SEL**	32	**MSDC S/W Debug Selection Register** This register is used to select S/W debug output
101300A4	**SW_DBG_OUT**	32	**MSDC S/W Debug Output Register** This register shows the selected debug output
101300A8	**DMA_LENGTH**	32	**DMA Length Register** This register is used to set Basic DMA operation length
101300B0	**PATCH_BIT0**	32	**MSDC Patch Bit Register 0** This register can configure the patch function. For normal function, these bit should keep in default value
101300B4	**PATCH_BIT1**	32	**MSDC Patch Bit Register 1** This register can configure the patch function. For normal function, these bit should keep in default value
101300EC	**PAD_TUNE**	32	**MSDC Pad Tuning Register** This register can configure the delay line embedded in Pad Macro

MEDIATEK CONFIDENTIAL
FOR fanwang@sweetcom.com.tw USE ONLY

This document contains information that is proprietary to MediaTek Inc.
Unauthorized reproduction or disclosure of this information in whole or in part is strictly prohibited.

101300F0	**DAT_RD_DLY0**	32	**MSDC Data Delay Line Register 0** This register can configure the delay line embedded in Pad Macro
101300F4	**DAT_RD_DLY1**	32	**MSDC Data Delay Line Register 1** This register can configure the delay line embedded in Pad Macro
101300F8	**HW_DBG_SEL**	32	**MSDC H/W Debug Selection Register** This register can select the H/W debug output
10130100	**MAIN_VER**	32	**MSDC Main Version Register** This register shows the version code of MSDC IP
10130104	**ECO_VER**	32	**MSDC ECO Version Register** This register shows the ECO version code of MSDC IP

10130000 **MSDC_CFG** **MSDC Configuration Register** **00000099**

Bit	31	30	29	28	27	26	25	24	23	22	21	20	19	18	17	16
Name																CCKMD
Type																RW
Reset																0
Bit	15	14	13	12	11	10	9	8	7	6	5	4	3	2	1	0
Name	CCKDIV								CCKSB			CCKDRVE	PIO	RST	CCKPD	MSDC
Type	RW								RU			RW	RW	A0	RW	RW
Reset	0	0	0	0	0	0	0	0	1			1	1	0	0	1

Bit(s)	Mnemonic	Name	Description
16	**CCKMD**	CARD_CK_MODE	**MS/SD Card clock mode** 1'b0: Use clock divider output which divided by msdc_src_ck as msdc_ck, bit[15]~bit[8] should be programmed. 1'b1: Use msdc_src_ck as msdc_ck, bit[15]~bit[8] is ignored.
15:8	**CCKDIV**	CARD_CK_DIV	**MS/SD Card clock divider** The register field controls clock frequency of serial clock on MS/SD bus. Please refer to Data Line Latching Timing Diagram and Response Latching Timing Diagram. For non-DDR mode, msdc_ck equals SD bus clock. (Ex: For SDR25 or HS, msdc_ck and SD bus clock will be 50MHz) For DDR mode, msdc_ck denotes the MSDC internal clock which will be dobule to SD bus clock. (Ex: For DDR50, msdc_ck should be set to 100MHz and bus clock will be 50MHz) 8'b00000000: msdc_ck =(1/2) * msdc_src_ck 8'b00000001: msdc_ck = (1/(4*1)) * msdc_src_ck 8'b00000010: msdc_ck = (1/(4*2)) * msdc_src_ck 8'b00000011: msdc_ck = (1/(4*3))* msdc_src_ck 8'b00010000: msdc_ck = (1/(4*16))* msdc_src_ck 8'b11111111: msdc_ck = (1/(4*255)) * msdc_src_ck
7	**CCKSB**	CARD_CK_STABLE	**MS/SD Card clock stable or not** After programming the CARD_CK_MODE or CARD_CK_DIV, this bit will immediately go to "0" and return to "1" if stable. User should poll this register to make sure the safety control of MSDC. 1'b0: Clock output is not stable 1'b1: Clock output is stable
4	**CCKDRVE**	CARD_CK_DRV_EN	**SD/MS Card Bus Clock drive enable bit** Set this bit to 1 to enable MSDC bus clock driver.

MEDIATEK CONFIDENTIAL
FOR farrwang@sznex.com.tw USE ONLY

This document contains information that is proprietary to MediaTek Inc.
Unauthorized reproduction or disclosure of this information in whole or in part is strictly prohibited.

Bit(s)	Mnemonic	Name	Description
			The default bus state depends on MSDC_CFG][1] CARD_CK_PWDN bit. If MSDC_CFG[1] CARD_CK_PWDN= 1, the default clock state is free running. If MSDC_CFG[1] CARD_CK_PWDN = 0, the default clock state is gated to 0. Set this bit to 0 will put the bus state into "tri-state". Default is 1. 1'b0: Put the clock pad into tri-state 1'b1: Enable MSDC to drive clock pad, the state of CLK depends on MSDC_CFG[1] CARD_CK_PWDN
3	**PIO**	PIO_MODE	**MS/SD PIO mode** PIO mode selection. Default is in PIO mode. 1'b0: DMA mode 1'b1: PIO mode
2	**RST**	RST	**Software reset** Writing 1 to this register will cause internal synchronous reset of MS/SD controller, and it will not reset register settings and DMA controller. The reset sequence is done when this bit goes to 0. S/W should wait this bit back to 0 after writing 1. 1'b0: MS/SD controller is not in reset state 1'b1: MS/SD controller is in reset state
1	**CCKPD**	CARD_CK_PWDN	**MSDC bus clock power down mode** This bit controls the card clock power down mode. 1'b0: Clock is gated to 0 if no command or data is transmitted. 1'b1: Clock is free running even if no command or data is transmitted. (The clock may still be stopped when MSDC write data is not enough or no space for next read data)
0	**MSDC**	MSDC	**MS/SD mode selection** The register bit is used to configure the controller as the host of Memory Stick or as the host of SD/MMC Memory card. The default value is to configure the controller as the host of Memory Stick. 1'b0: Configure the controller as the host of Memory Stick 1'b1: Configure the controller as the host of SD/MMC Memory card

10130004 **MSDC_IOCON** **MSDC IO Configuration Register** **00000000**

Bit	31	30	29	28	27	26	25	24	23	22	21	20	19	18	17	16
Name									RD 7SPL	RD 6SPL	RD 5SPL	RD 4SPL	RD 3SPL	RD2 SPL	RD 1SPL	RD 0SPL
Type									RW	RW	RW	RW	RW	RW	RW	RW
Reset									0	0	0	0	0	0	0	0
Bit	15	14	13	12	11	10	9	8	7	6	5	4	3	2	1	0
Name			WD 3SPL	WD 2SPL	WD 1SPL	WD 0SPL	WD SPL SEL	WD SPL			RD SPL SEL		DD LSEL	RD SPL	RS PL	SD R104C KS
Type			RW	RW	RW	RW	RW	RW			RW		RW	RW	RW	RW
Reset			0	0	0	0	0	0			0		0	0	0	0

Bit(s)	Mnemonic	Name	Description
23	**RD7SPL**	R_D7_SMPL	**Read data 7 sample selection** This bit is only valid when bit 5 is ON 1'b0: Sample read data by external bus clock rising edge 1'b1: Sample read data by external bus clock falling edge

MEDIATEK CONFIDENTIAL
FOR INTERNAL USE ONLY
ryang@ sjtech.com.tw

This document contains information that is proprietary to MediaTek Inc.
Unauthorized reproduction or disclosure of this information in whole or in part is strictly prohibited.

Bit(s)	Mnemonic	Name	Description
22	**RD6SPL**	R_D6_SMPL	**Read data 6 sample selection** This bit is only valid when bit 5 is ON 1'b0: Sample read data by external bus clock rising edge 1'b1: Sample read data by external bus clock falling edge
21	**RD5SPL**	R_D5_SMPL	**Read data 5 sample selection** This bit is only valid when bit 5 is ON 1'b0: Sample read data by external bus clock rising edge 1'b1: Sample read data by external bus clock falling edge
20	**RD4SPL**	R_D4_SMPL	**Read data 4 sample selection** This bit is only valid when bit 5 is ON 1'b0: Sample read data by external bus clock rising edge 1'b1: Sample read data by external bus clock falling edge
19	**RD3SPL**	R_D3_SMPL	**Read data 3 sample selection** This bit is only valid when bit 5 is ON 1'b0: Sample read data by external bus clock rising edge 1'b1: Sample read data by external bus clock falling edge
18	**RD2SPL**	R_D2_SMPL	**Read data 2 sample selection** This bit is only valid when bit 5 is ON 1'b0: Sample read data by external bus clock rising edge 1'b1: Sample read data by external bus clock falling edge
17	**RD1SPL**	R_D1_SMPL	**Read data 1 sample selection** This bit is only valid when bit 5 is ON 1'b0: Sample read data by external bus clock rising edge 1'b1: Sample read data by external bus clock falling edge
16	**RD0SPL**	R_D0_SMPL	**Read data 0 sample selection** This bit is only valid when bit 5 is ON 1'b0: Sample read data by external bus clock rising edge 1'b1: Sample read data by external bus clock falling edge
13	**WD3SPL**	W_D3_SMPL	**SDIO interrupt sample selection** This bit is only valid when bit 9 is ON 1'b0: Sample SDIO interrupt by external bus clock rising edge 1'b1: Sample SDIO interrupt by external bus clock falling edge
12	**WD2SPL**	W_D2_SMPL	**SDIO interrupt sample selection** This bit is only valid when bit 9 is ON 1'b0: Sample SDIO interrupt by external bus clock rising edge 1'b1: Sample SDIO interrupt by external bus clock falling edge
11	**WD1SPL**	W_D1_SMPL	**SDIO interrupt sample selection** This bit is only valid when bit 9 is ON 1'b0: Sample SDIO interrupt by external bus clock rising edge 1'b1: Sample SDIO interrupt by external bus clock falling edge
10	**WD0SPL**	W_D0_SMPL	**CRC Status and SDIO interrupt sample selection** This bit is only valid when bit 9 is ON 1'b0: Sample CRC Status and SDIO interrupt by external bus clock rising edge 1'b1: Sample CRC Status and SDIO interrupt by external bus clock falling edge
9	**WDSPLSEL**	W_D_SMPL_SEL	**Data line rising/falling latch fine tune selection in write transaction** 1'b0: All data line share one value indicated by MSDC_IOCON.W_D_SMPL 1'b1: Each data line has its own selection value indicated by Data line 0: MSDC_IOCON.W_D0_SMPL Data line 1: MSDC_IOCON.W_D1_SMPL Data line 2: MSDC_IOCON.W_D2_SMPL Data line 3: MSDC_IOCON.W_D3_SMPL

MEDIATEK CONFIDENTIAL
FOR farrwang@sunnyvale.com.tw USE ONLY

This document contains information that is proprietary to MediaTek Inc.
Unauthorized reproduction or disclosure of this information in whole or in part is strictly prohibited.

Bit(s)	Mnemonic	Name	Description
8	**WDSPL**	W_D_SMPL	**CRC Status and SDIO interrupt sample selection** 1'b0: Sample CRC Status and SDIO interrupt by external bus clock rising edge 1'b1: Sample CRC Status and SDIO interrupt by external bus clock falling edge
5	**RDSPLSEL**	R_D_SMPL_SEL	**Data line rising/falling latch fine tune selection in read transaction** 1'b0: All data line share one value indicated by MSDC_IOCON.R_D_SMPL 1'b1: Each data line has its own selection value indicated by Data line 0: MSDC_IOCON.R_D0_SMPL Data line 1: MSDC_IOCON.R_D1_SMPL Data line 2: MSDC_IOCON.R_D2_SMPL Data line 3: MSDC_IOCON.R_D3_SMPL Data line 4: MSDC_IOCON.R_D4_SMPL Data line 5: MSDC_IOCON.R_D5_SMPL Data line 6: MSDC_IOCON.R_D6_SMPL Data line 7: MSDC_IOCON.R_D7_SMPL
3	**DDLSEL**	D_DLYLINE_SEL	**Data line delay line fine tune selection** 1'b0: All data line share one delay selection value indicated by PAD_TUNE.PAD_DAT_RD_RXDLY 1'b1: Each data line has its own delay selection value indicated by Data line 0: DAT_RD_DLY0.DAT0_RD_DLY Data line 1: DAT_RD_DLY0.DAT1_RD_DLY Data line 2: DAT_RD_DLY0.DAT2_RD_DLY Data line 3: DAT_RD_DLY0.DAT3_RD_DLY Data line 4: DAT_RD_DLY1.DAT4_RD_DLY Data line 5: DAT_RD_DLY1.DAT5_RD_DLY Data line 6: DAT_RD_DLY1.DAT6_RD_DLY Data line 7: DAT_RD_DLY1.DAT7_RD_DLY
2	**RDSPL**	R_D_SMPL	**Read data sample selection** 1'b0: Sample read data by external bus clock rising edge 1'b1: Sample read data by external bus clock falling edge
1	**RSPL**	R_SMPL	**Command response sample selection** 1'b0: Sample response by external bus clock rising edge 1'b1: Sample response by external bus clock falling edge
0	**SDR104CKS**	SDR104_CLK_SEL	**SDR104 SCLK output clock control** This bit is only used when MSDC_CFG[17:16] CARD_CK_MODE is 2'b01. 1'b0: Bus clock output equals inverted msdc_src_ck 1'b1: Bus clock output equals msdc_src_ck

10130008 **MSDC_PS** **MSDC Pin Status Register** **01FF0000**

Bit	31	30	29	28	27	26	25	24	23	22	21	20	19	18	17	16
Name	SD WP							CMD	DAT							
Type	RU							RU	RU							
Reset	0							1	1	1	1	1	1	1	1	1
Bit	15	14	13	12	11	10	9	8	7	6	5	4	3	2	1	0
Name	CDDBCE														CD STS	CD EN
Type	RW														RU	RW
Reset	0	0	0	0											0	0

Bit(s)	Mnemonic	Name	Description

FOR MEDIATEK CONFIDENTIAL
fanwang@mediatek.com USE ONLY

This document contains information that is proprietary to MediaTek Inc.
Unauthorized reproduction or disclosure of this information in whole or in part is strictly prohibited.

Bit(s)	Mnemonic	Name	Description
31	**SDWP**	SD_WP	**Write Protection Switch status on SD Memory Card** The register bit shows the status of Write Protection Switch on SD Memory Card. There is no default reset value. The pin WP (Write Protection) is only useful while the controller is configured for SD Memory Card 1'b0: Write Protection Switch ON. It means that memory card is desired to be write-protected 1'b1: Write Protection Switch OFF. It means that memory card is writable
24	**CMD**	CMD	**Command line status** This bit reflects the command line value of MSDC bus.
23:16	**DAT**	DAT	**Data line status** This bit reflects the data line value of MSDC bus. (8-bits)
15:12	**CDDBCE**	CDDEBOUNCE	**Card detection de-bounce timer** The register field specifies the time interval for card detection de-bounce. Its default value is 0. It means that de-bounce interval is one 32KHz cycle. The interval will extend one cycle time of 32KHz by increasing the counter by 1
1	**CDSTS**	CDSTS	**Card detection status** 1'b0: Card detection pin status is logic low 1'b1: Card detection pin status is logic high
0	**CDEN**	CDEN	**Card detect enable** The register bit is used to control the card detection circuit 1'b0: Card detection is disable 1'b1: Card detection is enable

1013000C **MSDC_INT** **MSDC Interrupt Register** **00000000**

Bit	31	30	29	28	27	26	25	24	23	22	21	20	19	18	17	16
Name													DMAPROTECT	GPDCSERR	BDCSERR	
Type													W1C	W1C	W1C	
Reset													0	0	0	
Bit	15	14	13	12	11	10	9	8	7	6	5	4	3	2	1	0
Name	SDDCRCERR	SDDTO	DMAXFDNE	SDXFCPL	SDCSTA	SDRCRCER	SDCTO	SDCRDY	SDIOIRQ	DMAQEPTY	SDACDRCRCER	SDACDCTO	SDACDCRDY		MSDCCDSC	MMCIRQ
Type	W1C	W1C	W1C	W1C	RU	W1C	W1C	W1C	W1C	W1C	W1C	W1C	W1C		W1C	W1C
Reset	0	0	0	0	0	0	0	0	0	0	0	0	0		0	0

Bit(s)	Mnemonic	Name	Description
19	**DMAPROTECT**	DMA_PROTECT	**there is write operation to DMA start address, length, start bit or last buf bit**
18	**GPDCSERR**	GPD_CS_ERR	**GPD checksum error detected**
17	**BDCSERR**	BD_CS_ERR	**BD checksum error detected**
15	**SDDCRCE**	SD_DATA_CRCE	**SD Data CRC error interrupt**

© 2014 MediaTek Inc.

This document contains information that is proprietary to MediaTek Inc.
Unauthorized reproduction or disclosure of this information in whole or in part is strictly prohibited.
MEDIATEK CONFIDENTIAL FOR FAR WANG@SYNNEX.COM.TW USE ONLY

Bit(s)	Mnemonic	Name	Description
	RR	RR	Indicates that MS/SD controller detects a CRC error after reading a block of data from the DAT line or SD/MMC signals a CRC error after writing a block of data to the DAT line. 1'b0: Otherwise 1'b1: MS/SD controller detected a CRC error after reading a block of data from the DAT line or SD/MMC signaled a CRC error after writing a block of data to the DAT line
14	**SDDTO**	SD_DATTO	**SD Data timeout interrupt** Indicates that SD/MMC controller detects a timeout condition while waiting for data token on the DAT line. This bit is for both data read and data write. For SD data read, timeout will occur when the read data is not presented. For SD data write, timeout will occur when the write data CRC status is not presented if PATCH_BIT[30] DETECT_WR_CRC_TIMEOUT = 1 1'b0: Otherwise 1'b1: SD/MMC controller detects a timeout condition while waiting for data token on the DAT line
13	**DMAXFDNE**	DMA_XFER_DONE	**DMA transfer done interrupt** The register bit indicates the status of data block transfer. 1'b0: Otherwise 1'b1: A data block was successfully transferred
12	**SDXFCPL**	SD_XFER_COMPLETE	**SD Data transfer complete interrupt** This bit indicates the transaction which contains data has completed. While performing tuning procedure (Execute Tuning is set to 1), SD_XFER_COMPLETE is not set to 1.
11	**SDCSTA**	SD_CSTA	**SD CSTA update interrupt** The register bit indicates any bit in the register SDC_CSTA is active, the register bit will be set to 1. S/W should clear the SDC_CSTA and this bit will be de-asserted automatically. 1'b0: No SD Memory Card interrupt 1'b1: SD Memory Card interrupt exists
10	**SDRCRCER**	SD_RESP_CRCERR	**SD Command CRC error interrupt** Indicates that SD/MMC controller detected a CRC error after reading a response from the CMD line. 1'b0: Otherwise 1'b1: SD/MMC controller detected a CRC error after reading a response from the CMD line
9	**SDCTO**	SD_CMDTO	**SD Command timeout interrupt** Indicates that SD/MMC controller detected a timeout condition while waiting for a response on the CMD line. 1'b0: Otherwise 1'b1: SD/MMC controller detected a timeout condition while waiting for a response on the CMD line
8	**SDCRDY**	SD_CMDRDY	**SD Command ready interrupt** For the command without response, the register bit will be 1 once the command completes on SD/MMC bus. For command with response without busy, the register bit will be 1 whenever the command is issued onto SD/MMC bus and its corresponding response is received without CRC error. For command with response with busy in DAT0, the register bit will be 1 whenever the command is issued onto SD/MMC bus and its corresponding response is received without CRC error and the DAT0 transited from busy to idle. 1'b0: Otherwise 1'b1: Command finish successfully without a CRC error

MEDIATEK CONFIDENTIAL
FOR farrwang@wnbcom.tw USE ONLY

This document contains information that is proprietary to MediaTek Inc.
Unauthorized reproduction or disclosure of this information in whole or in part is strictly prohibited.

Bit(s)	Mnemonic	Name	Description
7	**SDIOIRQ**	SD_SDIOIRQ	**SD SDIO interrupt** This bit indicates the interrupt is sensed in the SDIO bus. 1'b0: No interrupt on SDIO bus 1'b1: Interrupt on SDIO bus
6	**DMAQEPTY**	DMA_Q_EMPTY	**DMA queue empty interrupt** This bit is used to indicate the current DMA queue is empty. Only for Descriptor mode and Enhance mode.
5	**SDACDRCRCER**	SD_AUTOCMD_RESP_CRCERR	**SD auto command CRC error interrupt** This bit is set when detecting a CRC error in the Auto command response.
4	**SDACDCTO**	SD_AUTOCMD_CMDTO	**SD auto command timeout interrupt** This bit is set if no response is returned within a specified cycles(64T in spec) from the end bit of Auto command.
3	**SDACDCRDY**	SD_AUTOCMD_CMDRDY	**SD auto command ready interrupt** This bit is set if auto command is executed without CRC error or time out.
1	**MSDCCDSC**	MSDC_CDSC	**MSDC Card detection status change interrupt** The register bit indicates if any interrupt for memory card insertion/removal exists. Whenever memory card is inserted or removed and card detection circuit is enabled, i.e., the register bit CDEN in the register MSDC_PS is set to 1, the register bit will be set to 1. It will be reset when the register is read. 1'b0: Otherwise 1'b1: Card is inserted or removed
0	**MMCIRQ**	MMC_IRQ	**MMC card interrupt** 1'b0: Otherwise 1'b1: indicates that MMC card interrupt event occurs

10130010 **MSDC_INTEN** **MSDC Interrupt Enable Register** **00000000**

Bit	31	30	29	28	27	26	25	24	23	22	21	20	19	18	17	16
Name													**ENDMAPROTECT**	**ENGPDCSERR**	**ENBDCSERR**	
Type													RW	RW	RW	
Reset													0	0	0	
Bit	15	14	13	12	11	10	9	8	7	6	5	4	3	2	1	0
Name	**ENSDDCRCERR**	**ENSDDTO**	**ENDMAXFDNE**	**ENSDXFCPL**	**ENSDCSTA**	**ENSDRCRCER**	**ENSDCTO**	**ENSDCRDY**	**ENSDIOIRQ**	**ENDMAQEPTY**	**ENSDACDRCRCER**	**ENSDACDCTO**	**ENSDACDCRDY**		**ENMSDCCDSC**	**ENMMCIRQ**
Type	RW	RW	RW	RW	RW	RW	RW	RW	RW	RW	RW	RW	RW		RW	RW
Reset	0	0	0	0	0	0	0	0	0	0	0	0	0		0	0

Bit(s)	Mnemonic	Name	Description
19	**ENDMAPROTECT**	EN_DMA_PROTECT	**DMA protection interrupt enable** 1'b0: Disable interrupt 1'b1: Enable interrupt
18	**ENGPDCS**	EN_GPD_CS_ER	**GPD checksum error interrupt enable**

MEDIATEK CONFIDENTIAL
FOR INTERNAL USE ONLY
FOR [illegible]@symtex.com.tw

This document contains information that is proprietary to MediaTek Inc.
Unauthorized reproduction or disclosure of this information in whole or in part is strictly prohibited.

Bit(s)	Mnemonic	Name	Description
	ERR	R	1'b0: Disable interrupt 1'b1: Enable interrupt
17	**ENBDCSERR**	EN_BD_CS_ERR	**BD checksum error interrupt enable** 1'b0: Disable interrupt 1'b1: Enable interrupt
15	**ENSDDCRCERR**	EN_SD_DATA_CRCERR	**SD Data CRC error interrupt enable** 1'b0: Disable interrupt 1'b1: Enable interrupt
14	**ENSDDTO**	EN_SD_DATTO	**SD Data timeout interrupt enable** 1'b0: Disable interrupt 1'b1: Enable interrupt
13	**ENDMAXFDNE**	EN_SD_DMA_XFER_DONE	**DMA transfer done interrupt enable** 1'b0: Disable interrupt 1'b1: Enable interrupt
12	**ENSDXFCPL**	EN_SD_XFER_COMPLETE	**SD Data transfer complete interrupt enable** 1'b0: Disable interrupt 1'b1: Enable interrupt
11	**ENSDCSTA**	EN_SD_CSTA	**SD CSTA update interrupt enable** 1'b0: Disable interrupt 1'b1: Enable interrupt
10	**ENSDRCRCER**	EN_SD_RESP_CRCERR	**SD Command CRC error interrupt enable** 1'b0: Disable interrupt 1'b1: Enable interrupt
9	**ENSDCTO**	EN_SD_CMDTO	**SD Command timeout interrupt enable** 1'b0: Disable interrupt 1'b1: Enable interrupt
8	**ENSDCRDY**	EN_SD_CMDRDY	**SD Command ready interrupt enable** 1'b0: Disable interrupt 1'b1: Enable interrupt
7	**ENSDIOIRQ**	EN_SD_SDIOIRQ	**SD SDIO interrupt enable** 1'b0: Disable interrupt 1'b1: Enable interrupt
6	**ENDMAQEPTY**	EN_DMA_Q_EMPTY	**DMA queue empty interrupt enable** 1'b0: Disable interrupt 1'b1: Enable interrupt
5	**ENSDACDRCRCER**	EN_SD_AUTOCMD_RESP_CRCERR	**SD auto command CRC error interrupt enable** 1'b0: Disable interrupt 1'b1: Enable interrupt
4	**ENSDACDCTO**	EN_SD_AUTOCMD_CMDTO	**SD auto command timeout interrupt enable** 1'b0: Disable interrupt 1'b1: Enable interrupt
3	**ENSDACDCRDY**	EN_AUTOCMD_CMDRDY	**SD auto command ready interrupt enable** 1'b0: Disable interrupt 1'b1: Enable interrupt
1	**ENMSDCCDSC**	EN_MSDC_CDSC	**MSDC Card detection status change interrupt enable** 1'b0: Disable interrupt 1'b1: Enable interrupt
0	**ENMMCIRQ**	EN_MMC_IRQ	**MMC card interrupt enable** 1'b0: Disable interrupt 1'b1: Enable interrupt

MEDIATEK CONFIDENTIAL
FOR farrwang@sunnex.com.tw USE ONLY

This document contains information that is proprietary to MediaTek Inc.
Unauthorized reproduction or disclosure of this information in whole or in part is strictly prohibited.

10130014 **MSDC_FIFOCS** **MSDC FIFO Control and Status Register** **00000000**

Bit	31	30	29	28	27	26	25	24	23	22	21	20	19	18	17	16
Name	FIFOCLR								TXFIFOCNT							
Type	A0								RU							
Reset	0								0	0	0	0	0	0	0	0
Bit	15	14	13	12	11	10	9	8	7	6	5	4	3	2	1	0
Name									RXFIFOCNT							
Type									RU							
Reset									0	0	0	0	0	0	0	0

Bit(s)	Mnemonic	Name	Description
31	**FIFOCLR**	FIFOCLR	**Embedded FIFO clear** Write this bit to 1 makes FIFO cleared. It will goes to 0 when FIFO is cleared. S/W needs to check this bit to make sure clearing FIFO sequence is done. This bit can be used when the data read/write sequence has error and need to clean the H/W FIFO.
23:16	**TXFIFOCNT**	TXFIFOCNT	**TX FIFO count for MSDC write** 8'd0: No data in FIFO 8'd1: 1bytes data in FIFO 8'd2: 2 bytes data in FIFO 8'd131: Maximum 131 bytes data in FIFO Others: reserved
7:0	**RXFIFOCNT**	RXFIFOCNT	**RX FIFO count for MSDC read** 8'd0: No data in FIFO 8'd1: 1bytes data in FIFO 8'd2: 2 bytes data in FIFO 8'd131: Maximum 131 bytes data in FIFO Others: reserved

10130018 **MSDC_TXDATA** **MSDC TX Data Port Register** **00000000**

Bit	31	30	29	28	27	26	25	24	23	22	21	20	19	18	17	16
Name	PIOTXDATA[31:16]															
Type	WO															
Reset	0	0	0	0	0	0	0	0	0	0	0	0	0	0	0	0
Bit	15	14	13	12	11	10	9	8	7	6	5	4	3	2	1	0
Name	PIOTXDATA[15:0]															
Type	WO															
Reset	0	0	0	0	0	0	0	0	0	0	0	0	0	0	0	0

Bit(s)	Mnemonic	Name	Description
31:0	**PIOTXDATA**	PIO_TXDATA	**PIO mode TXDATA port** This register can be accessed by Byte or Half-word or Word. This port can only be accessed in PIO mode. Otherwise, the transaction will be discarded.

1013001C **MSDC_RXDATA** **MSDC RX Data Port Register** **00000000**

Bit	31	30	29	28	27	26	25	24	23	22	21	20	19	18	17	16

MEDIATEK CONFIDENTIAL
FOR farrwang@synnex.com.tw USE ONLY

This document contains information that is proprietary to MediaTek Inc.
Unauthorized reproduction or disclosure of this information in whole or in part is strictly prohibited.

Name	PIORXDATA[31:16]															
Type	RU															
Reset	0	0	0	0	0	0	0	0	0	0	0	0	0	0	0	0
Bit	15	14	13	12	11	10	9	8	7	6	5	4	3	2	1	0
Name	PIORXDATA[15:0]															
Type	RU															
Reset	0	0	0	0	0	0	0	0	0	0	0	0	0	0	0	0

Bit(s)	Mnemonic	Name	Description
31:0	**PIORXDATA**	PIO_RXDATA	**PIO mode RXDATA port** This register can be accessed by Byte or Half-word or Word. This port can only be accessed in PIO mode. Otherwise, the transaction will be discarded.

10130030 **SDC_CFG** **SD Configuration Register** **00100000**

Bit	31	30	29	28	27	26	25	24	23	22	21	20	19	18	17	16
Name	DTOC										INTBGP	SDIOIDE	SDIO		BUSWD	
Type	RW										RW	RW	RW		RW	
Reset	0	0	0	0	0	0	0	0			0	1	0		0	0
Bit	15	14	13	12	11	10	9	8	7	6	5	4	3	2	1	0
Name															ENWKUPINS	ENWKUPSDIOINT
Type															RW	RW
Reset															0	0

Bit(s)	Mnemonic	Name	Description
31:24	**DTOC**	DTOC	**Data Timeout Counter** The period from the end of the initial host read command or the last read data block in a multiple block read operation to the start bit of the next read data block requires at least two serial clock cycles. The counter is used to extend the period (Read Data Access Time) in unit of 1048576 serial clocks. 8'b00000000: Extend 1048576 more serial clock cycle 8'b00000001: Extend 1048576x2 more serial clock cycle 8'b00000010: Extend 1048576x3 more serial clock cycle 8'b11111111: Extend 1048576x 256 more serial clock cycle
21	**INTBGP**	INT_AT_BLOCK_GAP	**Interrupt at block Gap** This bit is valid only in 4-bit mode of the SDIO card and selects a sample point in the interrupt cycle. Setting to 1 enables interrupt detection at the block gap for a multiple block transfer. Setting to 0 disables interrupt detection during a multiple block transfer. If the SD card cannot signal an interrupt during a multiple block transfer, this bit should be set to 0. When the Host Driver detects an SD card insertion, it shall set this bit according to the CCCR of the SDIO card. 1'b0: Disables interrupt detection at the block gap 1'b1: Enables interrupt detection at the block gap
20	**SDIOIDE**	SDIO_INT_DET_EN	**SDIO interrupt detection enable** This bit is to inform the SD controller to sense the SDIO interrupt 1'b0: SDIO interrupt detection is disabled 1'b1: SDIO interrupt detection is enabled if the SDIO bit is also on

MEDIATEK CONFIDENTIAL
FOR farrwang@mnex.com.tw USE ONLY

This document contains information that is proprietary to MediaTek Inc.
Unauthorized reproduction or disclosure of this information in whole or in part is strictly prohibited.

Bit(s)	Mnemonic	Name	Description
19	**SDIO**	SDIO	**SDIO mode enable bit** This bit is to enable the support to sense the SDIO interrupt and disable the R4 response CRC check for SDIO card 1'b0: SDIO mode is disabled 1'b1: SDIO mode is enabled
17:16	**BUSWD**	BUSWIDTH	**Bus width configuration** This field is used to define the SD/MMC bus width 2'b00: 1 bit mode 2'b01: 4 bit mode 2'b10: 8 bit mode 2'b11: reserved
1	**ENWKUPINS**	WAKEUP_INS_EN	**Card status change wakeup event enable bit** 1'b0: Disable wakeup event for card status change 1'b1: Enable wakeup event for card status change
0	**ENWKUPSDIOINT**	WAKEUP_SDIOINT_EN	**SDIO card interrupt wakeup event enable bit** 1'b0: Disable wakeup event for SDIO card interrupt 1'b1: Enable wakeup event for SDIO card interrupt

10130034 **SDC_CMD** **SD Command Register** **00000000**

Bit	31	30	29	28	27	26	25	24	23	22	21	20	19	18	17	16
Name				**ACMD**	**LEN**											
Type				RW	RW											
Reset				0	0	0	0	0	0	0	0	0	0	0	0	0
Bit	15	14	13	12	11	10	9	8	7	6	5	4	3	2	1	0
Name	**GOIRQ**	**STOP**	**RW**	**DTYPE**			**RSPTYP**			**BREAK**	**CMD**					
Type	RW	RW	RW	RW			RW			RW	RW					
Reset	0	0	0	0	0		0	0	0	0	0	0	0	0	0	0

Bit(s)	Mnemonic	Name	Description
28	**ACMD**	AUTO_CMD	**Auto command enable** This field determines use of auto command functions. This function can be used in all modes including PIO/Basic DMA/Descriptor DMA/Enhanced Mode. There are two methods to stop Multiple-block read and write operation. (1) Auto CMD12 Enable Multiple-block read and write commands for memory require CMD12 to stop the operation. When ACMD-12 is used, MSDC issues CMD12 automatically when last block transfer is completed. Auto CMD12 error is indicated to the MSDC_INT register. The Host Driver shall not set this bit if the command does not require CMD12. In particular, secure commands defined in the Part 3 File Security specification do not require CMD12. (2) Auto CMD23 Enable When ACMD-23 is used, MSDC issues a CMD23 automatically before issuing a command specified in the CMD field. The Host Controller Version 3.00 and later shall support this function. By writing the Command register, MSDC issues a CMD23 first and then issues a command specified by the CMD field in SDC_CMD register. If response errors of CMD23 are detected, the second command is not issued. A CMD23 error is indicated in the MSDC_INT register. 32-bit block count value for CMD23 is set to SDC_BLOCK_NUM register.

MEDIATEK CONFIDENTIAL
FOR farrwang@symnex.com.tw USE ONLY

This document contains information that is proprietary to MediaTek Inc.
Unauthorized reproduction or disclosure of this information in whole or in part is strictly prohibited.

Bit(s)	Mnemonic	Name	Description
			1'b0: Disable Auto Command 1'b1: Enable Auto CMD12
27:16	**LEN**	LEN	**Length** The register field is used to define the length of one block in unit of byte in a data transaction of block mode or the data length in unit of byte in data transaction of byte mode. The maximal value of block length is 2048 bytes. 12'b000000000000: Reserved 12'b000000000001: Block length is 1 byte 12'b000000000010: Block length is 2 byte 12'b011111111111: Block length is 2047 byte 12'b100000000000: Block length is 2048 byte
15	**GOIRQ**	GO_IRQ	**GO_IRQ command** The register bit indicates if the command is GO_IRQ_STATE (CMD40) and used only for MMC protocol. If the command is GO_IRQ_STATE, the period between command token and response token will not be limited. 1'b0: The command is not GO_IRQ_STATE 1'b1: The command is GO_IRQ_STATE
14	**STOP**	STOP	**Stop command** The register bit indicates if the command is a stop transmission command. It should be set to 1 when CMD12 (SD/MMC) or CMD52 with I/O abort (SDIO) is to be issued. 1'b0: The command is not a stop transmission command 1'b1: The command is a stop transmission command
13	**RW**	RW	**Command read write selection** The register bit defines the command is a read command or write command. The register bit is valid only when the command will cause a transaction with data token. 1'b0: The command is a read command 1'b1: The command is a write command
12:11	**DTYPE**	DTYPE	**Data block selection** The register field defines data token type for the command. 2'b00: No data token for the command 2'b01: Single block transaction (only available in block mode) 2'b10: Multiple block transaction. (only available in block mode) 2'b11: Stream operation. It only shall be used in MMC protocol. (only available in block mode)
9:7	**RSPTYP**	RSPTYP	**Command response type** 3'b000: This command has no response. 3'b001: The command has R1/R5/R6/R7 response. The response token is 48-bit with CRC check (For SD/MMC/SDIO) (Not include the SDIO abort command) 3'b010: The command has R2 response. The response token is 136-bit (For SD/MMC) 3'b011: The command has R3 response. The response token is 48-bit response, no CRC check (For SD/MMC) 3'b100: The command has R4 response. The response token is 48-bit without CRC check (For SDIO) The response token is 48-bit with CRC check (For MMC) 3'b111: The command has R1b response. The response token is 48-bit (For SD/MMC/SDIO)
6	**BREAK**	BREAK	**Abort a pending MMC GO_IRQ command** It is only valid for a pending GO_IRQ_MODE command waiting for MMC interrupt response. 1'b0: Not a beak command 1'b1: Break a pending MMC GO_IRQ_MODE command in the controller.

MEDIATEK CONFIDENTIAL
FOR farrwang@mtk.com ONLY

This document contains information that is proprietary to MediaTek Inc.
Unauthorized reproduction or disclosure of this information in whole or in part is strictly prohibited.

Bit(s)	Mnemonic	Name	Description
5:0	**CMD**	CMD	**SD Memory Card command**

10130038 **SDC_ARG** **SD Argument Register** **00000000**

Bit	31	30	29	28	27	26	25	24	23	22	21	20	19	18	17	16
Name	ARG[31:16]															
Type	RW															
Reset	0	0	0	0	0	0	0	0	0	0	0	0	0	0	0	0
Bit	15	14	13	12	11	10	9	8	7	6	5	4	3	2	1	0
Name	ARG[15:0]															
Type	RW															
Reset	0	0	0	0	0	0	0	0	0	0	0	0	0	0	0	0

Bit(s)	Mnemonic	Name	Description
31:0	**ARG**	ARG	**Memory card controller argument register**

1013003C **SDC_STS** **SD Status Register** **00000000**

Bit	31	30	29	28	27	26	25	24	23	22	21	20	19	18	17	16
Name	MMCSWRCPL															CMD_WR_BUSY
Type	RU															W1C
Reset	0															0
Bit	15	14	13	12	11	10	9	8	7	6	5	4	3	2	1	0
Name															CMDBSY	SDCBSY
Type															RU	RU
Reset															0	0

Bit(s)	Mnemonic	Name	Description
31	**MMCSWRCPL**	MMC_STREAM_WR_COMPL	**MMC Stream mode write data is all flushed to MMC card** S/W can use this bit to confirm last write data are flushed to MMC then issue STOP command. This bit is only valid when the command SDC_CMD.DTYPE=2'b11. 1'b0: Last Data are partially inside MSDC 1'b1: Last data are flushed to MMC card
16		CMD_WR_BUSY	
1	**CMDBSY**	CMDBUSY	**SD Command line busy status** S/W should always read this bit to make sure the command line is not busy before sending the next command. If the command is R1B or data read/write command, S/W should check SDCBUSY bit too. Note: When Auto command 12 is enabled, this bit will be asserted immediately after SDC_CMD is written and de-asserted after auto-command 12 finishes. 1'b0: No transmission is going on CMD line on SD bus 1'b1: There exists transmission going on CMD line on SD bus
0	**SDCBSY**	SDCBUSY	**SD controller busy status**

MEDIATEK CONFIDENTIAL
FOR farrwang@synnex.com.tw USE ONLY

This document contains information that is proprietary to MediaTek Inc.
Unauthorized reproduction or disclosure of this information in whole or in part is strictly prohibited.

Bit(s)	Mnemonic	Name	Description
			1'b0: SD controller is idle 1'b1: SD controller is busy

10130040 **SDC_RESP0** **SD Response Register 0** **00000000**

Bit	31	30	29	28	27	26	25	24	23	22	21	20	19	18	17	16
Name	RESP0[31:16]															
Type	RU															
Reset	0	0	0	0	0	0	0	0	0	0	0	0	0	0	0	0
Bit	15	14	13	12	11	10	9	8	7	6	5	4	3	2	1	0
Name	RESP0[15:0]															
Type	RU															
Reset	0	0	0	0	0	0	0	0	0	0	0	0	0	0	0	0

Bit(s)	Mnemonic	Name	Description
31:0	**RESP0**	RESP0	**Memory card controller response register 0**

10130044 **SDC_RESP1** **SD Response Register 1** **00000000**

Bit	31	30	29	28	27	26	25	24	23	22	21	20	19	18	17	16
Name	RESP1[31:16]															
Type	RU															
Reset	0	0	0	0	0	0	0	0	0	0	0	0	0	0	0	0
Bit	15	14	13	12	11	10	9	8	7	6	5	4	3	2	1	0
Name	RESP1[15:0]															
Type	RU															
Reset	0	0	0	0	0	0	0	0	0	0	0	0	0	0	0	0

Bit(s)	Mnemonic	Name	Description
31:0	**RESP1**	RESP1	**Memory card controller response register 1**

10130048 **SDC_RESP2** **SD Response Register 2** **00000000**

Bit	31	30	29	28	27	26	25	24	23	22	21	20	19	18	17	16
Name	RESP2[31:16]															
Type	RU															
Reset	0	0	0	0	0	0	0	0	0	0	0	0	0	0	0	0
Bit	15	14	13	12	11	10	9	8	7	6	5	4	3	2	1	0
Name	RESP2[15:0]															
Type	RU															
Reset	0	0	0	0	0	0	0	0	0	0	0	0	0	0	0	0

Bit(s)	Mnemonic	Name	Description
31:0	**RESP2**	RESP2	**Memory card controller response register 2**

1013004C **SDC_RESP3** **SD Response Register 3** **00000000**

Bit	31	30	29	28	27	26	25	24	23	22	21	20	19	18	17	16

MEDIATEK CONFIDENTIAL
FOR farrwang@symtex.com.tw USE ONLY

This document contains information that is proprietary to MediaTek Inc.
Unauthorized reproduction or disclosure of this information in whole or in part is strictly prohibited.

Name	RESP3[31:16]															
Type	RU															
Reset	0	0	0	0	0	0	0	0	0	0	0	0	0	0	0	0
Bit	15	14	13	12	11	10	9	8	7	6	5	4	3	2	1	0
Name	RESP3[15:0]															
Type	RU															
Reset	0	0	0	0	0	0	0	0	0	0	0	0	0	0	0	0

Bit(s)	Mnemonic	Name	Description
31:0	**RESP3**	RESP3	**Memory card controller response register 3**

10130050 SDC_BLK_NUM SD Block Number Register 00000001

Bit	31	30	29	28	27	26	25	24	23	22	21	20	19	18	17	16
Name	BLKNUM[31:16]															
Type	RW															
Reset	0	0	0	0	0	0	0	0	0	0	0	0	0	0	0	0
Bit	15	14	13	12	11	10	9	8	7	6	5	4	3	2	1	0
Name	BLKNUM[15:0]															
Type	RW															
Reset	0	0	0	0	0	0	0	0	0	0	0	0	0	0	0	1

Bit(s)	Mnemonic	Name	Description
31:0	**BLKNUM**	BLOCK_NUMBER	**Memory card controller Block number** This field indicates the block number of data transaction. 32'd0: Reserved 32'd1: 1 data block 32'd2: 2 data block 32'd3: 3 data block 32'hffffffff: 4GB-1 data block

10130058 SDC_CSTS SD Card Status Register 00000000

Bit	31	30	29	28	27	26	25	24	23	22	21	20	19	18	17	16
Name	CSTS[31:16]															
Type	W1C															
Reset	0	0	0	0	0	0	0	0	0	0	0	0	0	0	0	0
Bit	15	14	13	12	11	10	9	8	7	6	5	4	3	2	1	0
Name	CSTS[15:0]															
Type	W1C															
Reset	0	0	0	0	0	0	0	0	0	0	0	0	0	0	0	0

Bit(s)	Mnemonic	Name	Description
31:0	**CSTS**	CSTS	**CSTA** The card status field in the response R1 or R1b field. Each bit can be write 1 clear individually.

1013005C SDC_CSTS_EN SD Card Status Enable Register 00000000

Bit	31	30	29	28	27	26	25	24	23	22	21	20	19	18	17	16
Name	CSTS_EN[31:16]															
Type	RW															

MEDIATEK CONFIDENTIAL
FOR farrwang@synnex.com.tw USE ONLY

This document contains information that is proprietary to MediaTek Inc.
Unauthorized reproduction or disclosure of this information in whole or in part is strictly prohibited.

Reset	0	0	0	0	0	0	0	0	0	0	0	0	0	0	0	0
Bit	15	14	13	12	11	10	9	8	7	6	5	4	3	2	1	0
Name	**CSTS_EN[15:0]**															
Type	RW															
Reset	0	0	0	0	0	0	0	0	0	0	0	0	0	0	0	0

Bit(s)	Mnemonic	Name	Description
31:0	**CSTS_EN**	CSTS_EN	**CSTA_EN** This register is used to control which bit of the CSTA will generate the MSDC_INT.SDCSTA

10130060 SDC_DATCRC_STS SD Card Data CRC Status Register 00000000

Bit	31	30	29	28	27	26	25	24	23	22	21	20	19	18	17	16
Name																
Type																
Reset																
Bit	15	14	13	12	11	10	9	8	7	6	5	4	3	2	1	0
Name									**DCSSP**							
Type									RU							
Reset									0	0	0	0	0	0	0	0

Bit(s)	Mnemonic	Name	Description
7:0	**DCSSP**	DAT_CRCSTS_POS	**MSDC read DATA CRC status** This register reflects the CRC status of data line[7:0]. This register is only for MSDC Read. 1'b0: No CRC error 1'b1: CRC error

10130080 SD_ACMD_RESP SD ACMD Response Register 00000000

Bit	31	30	29	28	27	26	25	24	23	22	21	20	19	18	17	16
Name	**ACMDRESP[31:16]**															
Type	RU															
Reset	0	0	0	0	0	0	0	0	0	0	0	0	0	0	0	0
Bit	15	14	13	12	11	10	9	8	7	6	5	4	3	2	1	0
Name	**ACMDRESP[15:0]**															
Type	RU															
Reset	0	0	0	0	0	0	0	0	0	0	0	0	0	0	0	0

Bit(s)	Mnemonic	Name	Description
31:0	**ACMDRESP**	AUTOCMD_RESP	**SD Auto command response register** This register stores the response[39:8] of ACMD12/ACMD23/ACMD19.

10130090 DMA_SA DMA Start Address Register 00000000

Bit	31	30	29	28	27	26	25	24	23	22	21	20	19	18	17	16
Name	**DMASA[31:16]**															
Type	RW															
Reset	0	0	0	0	0	0	0	0	0	0	0	0	0	0	0	0
Bit	15	14	13	12	11	10	9	8	7	6	5	4	3	2	1	0

MEDIATEK CONFIDENTIAL
FOR farrwang@symmx.com ONLY USE ONLY

This document contains information that is proprietary to MediaTek Inc.
Unauthorized reproduction or disclosure of this information in whole or in part is strictly prohibited.

Name	DMASA[15:0]															
Type	RW															
Reset	0	0	0	0	0	0	0	0	0	0	0	0	0	0	0	0

Bit(s)	Mnemonic	Name	Description
31:0	**DMASA**	DMA_STR_ADDR	**The start address of the DMA address** This register is used to set the start address of the DMA. In DMA basic mode, this field indicates the source or destination address of the data transfer which depends on the command. In descriptor base DMA, this is the descriptor chain start address.

10130094 DMA_CA DMA Current Address Register 00000000

Bit	31	30	29	28	27	26	25	24	23	22	21	20	19	18	17	16
Name	DMACA[31:16]															
Type	RU															
Reset	0	0	0	0	0	0	0	0	0	0	0	0	0	0	0	0
Bit	15	14	13	12	11	10	9	8	7	6	5	4	3	2	1	0
Name	DMACA[15:0]															
Type	RU															
Reset	0	0	0	0	0	0	0	0	0	0	0	0	0	0	0	0

Bit(s)	Mnemonic	Name	Description
31:0	**DMACA**	DMA_CURR_ADDR	**The current address of the DMA address** This register is used to read the current address of the DMA descriptor chain.

10130098 DMA_CTRL DMA Control Register 00006000

Bit	31	30	29	28	27	26	25	24	23	22	21	20	19	18	17	16
Name																
Type																
Reset																
Bit	15	14	13	12	11	10	9	8	7	6	5	4	3	2	1	0
Name		BSTSZ			SPLIT1K	LASTBF	DMAALIGN	DMAMOD						DMARSM	DMASTOP	DMASTART
Type		RW			RW	RW	RW	RW						WO	A0	WO
Reset		1	1	0	0	0	0	0						0	0	0

Bit(s)	Mnemonic	Name	Description
14:12	**BSTSZ**	BURST_SIZE	**DMA burst size** This field is used to specify the maximum transfer bytes allowed at the device per DMA burst. This field can not be modified when the DMA status is 1. 3'd3: 8 Bytes 3'd4: 16 Bytes 3'd5: 32 Bytes 3'd6: 64 Bytes Other: Reserved
11	**SPLIT1K**	DMA_SPLIT_1K	**This field is used to specify whether split burst when corss 1K boundry address** 1'b0: 1K boundary not split

MEDIATEK CONFIDENTIAL
FOR farrwang@synnex.com.tw USE ONLY

This document contains information that is proprietary to MediaTek Inc.
Unauthorized reproduction or disclosure of this information in whole or in part is strictly prohibited.

Bit(s)	Mnemonic	Name	Description
			1'b1: 1K boundary split
10	**LASTBF**	LAST_BUF	**Last buffer of the basic DMA mode** This field indicates the last buffer in the basic DMA mode
9	**DMAALIGN**	DMA_ALIGN	**This field is used to specify whether address aligment burst size** 1'b0: do not DAM burst size alignment 1'b1: DAM burst size alignment
8	**DMAMOD**	DMA_MODE	**DMA operation mode** This field indicates operation mode of DMA 1'b0: Basic DMA mode 1'b1: Descriptor base DMA mode
2	**DMARSM**	DMA_RESUME	**DMA resume control register** This bit is used to resume the DMA transaction. Read always return 0
1	**DMASTOP**	DMA_STOP	**DMA Stop control register** This bit is used to stop the DMA transaction. When SW issue STOP command, SW must wait this bit de-assert or DMA inactive to guarantee stop done.
0	**DMASTART**	DMA_START	**DMA start control register** This bit is used to start the DMA transaction. Read always return 0

1013009C **DMA_CFG** **DMA Configuration Register** **00000000**

Bit	31	30	29	28	27	26	25	24	23	22	21	20	19	18	17	16
Name																DMACHKSUM12B
Type																RW
Reset																0
Bit	**15**	**14**	**13**	**12**	**11**	**10**	**9**	**8**	**7**	**6**	**5**	**4**	**3**	**2**	**1**	**0**
Name			MSDCACTIVEEN				AHBHPROT2EN								DSCPCSEN	DMASTS
Type			RW				RW								RW	RU
Reset			0	0			0	0							0	0

Bit(s)	Mnemonic	Name	Description
16	**DMACHKSUM12B**	DMA_CHK_SUM_12B	**This register indicates GPD/BD checksum cover 16byte or 12byte** 1'b0: GPD/BD checksum cover 16byte 1'b1: GPD/BD checksum only cover 12byte
13:12	**MSDCACTIVEEN**	MSDC_ACTIVE_EN	**This register will indicate how to control msdc_active** 2'b00: dynamic control msdc_active 2'b01: msdc_active = 0 2'b10: msdc_active = 1 2'b11: Reserved
9:8	**AHBHPROT2EN**	AHB_HPROT_2_EN	**This register will determine how to control hprot_2 pin of AHB bus** AHB_HPROT_2_EN = 2'b00, and Basic DMA Mode All the write transfers of a burst will access by bufferable mode except the last burst of DMA

MEDIATEK CONFIDENTIAL
FOR farrwang@symnex.com.tw USE ONLY

This document contains information that is proprietary to MediaTek Inc.
Unauthorized reproduction or disclosure of this information in whole or in part is strictly prohibited.

Bit(s)	Mnemonic	Name	Description
			AHB_HPROT2_2_EN=2'b00, and Descriptor DMA Mode all the write transfers of a burst will access by bufferable mode except HW own update transfer 2'b00: dynamic control hprot_2 2'b01: hprot_2 = 0 2'b10: hprot_2 = 1
1	**DSCPCSEN**	DMA_DSCP_CS_EN	**DMA descriptor checksum enable** This bit is used to enable or disable the descriptor checksum validation function for the descriptor. This field can not be modified when the DMA status is 1.
0	**DMASTS**	DMA_STATUS	**DMA status** This bit is used to indicate the status of the DMA. 1'b0: DMA engine is inactive 1'b1: DMA engine is active

101300A0 **SW_DBG_SEL** **MSDC S/W Debug Selection Register** **00000000**

Bit	31	30	29	28	27	26	25	24	23	22	21	20	19	18	17	16
Name																
Type																
Reset																
Bit	15	14	13	12	11	10	9	8	7	6	5	4	3	2	1	0
Name	SWDBGSEL															
Type	RW															
Reset	0	0	0	0	0	0	0	0	0	0	0	0	0	0	0	0

Bit(s)	Mnemonic	Name	Description
15:0	**SWDBGSEL**	DBG_SEL	**MSDC debug selection** This contain is reserved!

101300A4 **SW_DBG_OUT** **MSDC S/W Debug Output Register** **00000000**

Bit	31	30	29	28	27	26	25	24	23	22	21	20	19	18	17	16
Name	SWDBGO[31:16]															
Type	RU															
Reset	0	0	0	0	0	0	0	0	0	0	0	0	0	0	0	0
Bit	15	14	13	12	11	10	9	8	7	6	5	4	3	2	1	0
Name	SWDBGO[15:0]															
Type	RU															
Reset	0	0	0	0	0	0	0	0	0	0	0	0	0	0	0	0

Bit(s)	Mnemonic	Name	Description
31:0	**SWDBGO**	DBG_OUT	**MSDC debug output** 32 bit output selected by SW_DBG_SEL register

101300A8 **DMA_LENGTH** **DMA Length Register** **00000000**

Bit	31	30	29	28	27	26	25	24	23	22	21	20	19	18	17	16
Name	XFSZ[31:16]															
Type	RW															

MEDIATEK CONFIDENTIAL
FOR farrwang@synnex.com.tw USE ONLY

This document contains information that is proprietary to MediaTek Inc.
Unauthorized reproduction or disclosure of this information in whole or in part is strictly prohibited.

Reset	0	0	0	0	0	0	0	0	0	0	0	0	0	0	0	0
Bit	15	14	13	12	11	10	9	8	7	6	5	4	3	2	1	0
Name	XFSZ[15:0]															
Type	RW															
Reset	0	0	0	0	0	0	0	0	0	0	0	0	0	0	0	0

Bit(s)	Mnemonic	Name	Description
31:0	**XFSZ**	XFER_SIZE	**DMA total transfer size** This field is used to specify the number of DMA transfer byte required for the movement of source data through DMA. This field is only valid in basic DMA mode.

101300B0 **PATCH_BIT0** **MSDC Patch Bit Register 0** **403C0006**

Bit	31	30	29	28	27	26	25	24	23	22	21	20	19	18	17	16
Name	PTCH31	PTCH30	PTCH29	PTCH28	PTCH27	PTCH26	PTCH22				PTCH18				PTCH17	
Type	RW	RW	RW	RW	RW	RW	RW				RW				RW	
Reset	0	1	0	0	0	0	0	0	0	0	1	1	1	1	0	
Bit	15	14	13	12	11	10	9	8	7	6	5	4	3	2	1	0
Name	PTCH15						INTCKS							PTCH02	PTCH01	
Type	RW						RW							RW	RW	
Reset	0						0	0	0					1	1	

Bit(s)	Mnemonic	Name	Description
31	**PTCH31**	EN_MMC_DRV_RESP	**Enable MSDC always drives bus when output wakeup response (BREAK)** 1'b0: Disable 1'b1: Enable
30	**PTCH30**	DETECT_WR_CRC_TIMEOUT	**MSDC write data CRC phase timeout detection** 1'b0: Not detect CRC phase timeout 1'b1: detect CRC phase timeout
29	**PTCH29**	SPC_ALWAYS_PUSH	**SPC Buffer push mechanism** 1'b0: Push the buffer only when read transfer is on-going 1'b1: Always push the buffer
28	**PTCH28**	SDIO_INT_DLY_SEL	**SDIO interrupt latch time selection** 1'b0: Latch the data line value in internal SDIO interrupt period 1'b1: Latch the data line value in 1 clock delay of internal SDIO interrupt period
27	**PTCH27**	SDC_CMD_CMD FAIL_SEL	**SDIO interrupt period recovery selection** 1'b0: SDIO interrupt period will re-start after a CMD12 or CMD52 command is issued 1'b1: SDIO interrupt period whenever DAT line is not busy
26	**PTCH26**	SDC_CMD_IDRT_SEL	**SD identification response time selection** The register bit indicates if the command has a response with NID (that is, 5 serial clock cycles as defined in SD Memory Card Specification Part 1 Physical Layer Specification version 1.0) response time. The register bit is valid only when the command has a response token. Thus the register bit must be set to 1 for CMD2 (ALL_SEND_CID) and ACMD41 (SD_APP_OP_CMD). 1'b0: Otherwise. 1'b1: The command has a response with NID response time.
25:22	**PTCH22**	SDC_CFG_WDO	**SD Write Data Output Delay**

MEDIATEK CONFIDENTIAL
FOR farrwang@sunplex.com.tw USE ONLY

This document contains information that is proprietary to MediaTek Inc.
Unauthorized reproduction or disclosure of this information in whole or in part is strictly prohibited.

Bit(s)	Mnemonic	Name	Description
		D	The period from finish of the response for the initial host write command or the last write data block in a multiple block write operation to the start bit of the next write data block requires at least two serial clock cycles. The register field is used to extend the period (Write Data Output Delay) in unit of one serial clock. 4'b0000: No extend. 4'b0001: Extend one more serial clock cycle. 4'b0010: Extend two more serial clock cycles. 4'b1111: Extend fifteen more serial clock cycle.
21:18	**PTCH18**	SDC_CFG_BSY DLY	**SD R1B busy detection mode** The register field is only valid for the commands with R1b response. If the command has a response of R1b type, MS/SD controller must monitor the data line 0 for card busy status from the bit time that is two serial clock cycles after the command end bit to check if operations in SD/MMC Memory Card have finished. The register field is used to expand the time between the command end bit and end of detection period to detect card busy status. If time is up and there is no card busy status on data line 0, then the controller will abandon the detection. 4'b0000: No extend. 4'b0001: Extend one more serial clock cycle. 4'b0010: Extend two more serial clock cycles. 4'b1111: Extend fifteen more serial clock cycle.
17	**PTCH17**	SDIO_CFG_INTC _SEL	**SDIO Interrupt model selection** 1'b0: Only when data line [1] = 0 and then trigger SDIO interurpt event 1'b1: Only when data line [3:0] = 4'b1101 and then trigger SDIO interurpt event
15	**PTCH15**	MSDC_FIFO_RD _DIS	**MSDC RXFIFO Read Disable** 1'b0: Disable FIFO read permission to RXFIFO in PIO mode 1'b1: Enable FIFO read permission to RXFIFO in PIO mode
9:7	**INTCKS**	INT_DAT_LATCH _CK_SEL	**Internal MSDC clock phase selection** Total 8 stages, each stage can delay 1 clock period of msdc_src_ck
2	**PTCH02**	DIS_REFLECT_ CMDWR_WHEN _BSY	**Enable SD command register write montior** 1'b0: Enable monitor function 1'b1: Disable monitor function
1	**PTCH01**	EN_SDC_ODD_8 BIT_SUP	**Enable SD odd number support for 8-bit data bus** 1'b0: Disable 1'b1: Enable

101300B4 **PATCH_BIT1** **MSDC Patch Bit Register 1** **FF800009**

Bit	31	30	29	28	27	26	25	24	23	22	21	20	19	18	17	16
Name	MSHBFCKEN	MRCTLCKEN	MWCTLCKEN	MSDCKEN	MACMDCKEN	MVOLDTCKEN	MPSCCKEN	MSPCCKEN	HGDMACKEN							
Type	RW	RW	RW	RW	RW	RW	RW	RW	RW							
Reset	1	1	1	1	1	1	1	1	1							
Bit	15	14	13	12	11	10	9	8	7	6	5	4	3	2	1	0
Name			BIAS28R0	BIAS28R1	BIAS28R2				GETCRCMARGIN	GETBUSYMARGIN	CMDTA			WRTA		

© 2014 MediaTek Inc.
This document contains information that is proprietary to MediaTek Inc.
Unauthorized reproduction or disclosure of this information in whole or in part is strictly prohibited.

MEDIATEK CONFIDENTIAL
FOR fay.wang@sintex.com.tw USE ONLY

Type			RW	RW	RW				RW	RW	RW			RW		
Reset			0	0	0	0	0	0	0	0	0	0	1	0	0	1

Bit(s)	Mnemonic	Name	Description
31	**MSHBFCKEN**	MSDC_CK_SHBFF_CKEN	**msdc_src_ck clock enable bit for SHBFF** 1'b0: Disable 1'b1: Enable
30	**MRCTLCKEN**	MSDC_CK_RCTL_CKEN	**msdc_src_ck clock enable bit for RCTL** 1'b0: Disable 1'b1: Enable
29	**MWCTLCKEN**	MSDC_CK_WCTL_CKEN	**msdc_src_ck clock enable bit for WCTL** 1'b0: Disable 1'b1: Enable
28	**MSDCKEN**	MSDC_CK_SD_CKEN	**msdc_src_ck clock enable bit for SD** 1'b0: Disable 1'b1: Enable
27	**MACMDCKEN**	MSDC_CK_ACMD_CKEN	**msdc_src_ck clock enable bit for ACMD** 1'b0: Disable 1'b1: Enable
26	**MVOLDTCKEN**	MSDC_CK_VOLDET_CKEN	**msdc_src_ck clock enable bit for VOLDET** 1'b0: Disable 1'b1: Enable
25	**MPSCCKEN**	MSDC_CK_PSC_CKEN	**msdc_src_ck clock enable bit for PSC** 1'b0: Disable 1'b1: Enable
24	**MSPCCKEN**	MSDC_CK_SPC_CKEN	**msdc_src_ck clock enable bit forSPC** 1'b0: Disable 1'b1: Enable
23	**HGDMACKEN**	AHB_CK_GDMA_CKEN	**hclk_ck clock enable bit for GDMA** 1'b0: Disable 1'b1: Enable
13	**BIAS28R0**	BIAS_EXTBIAS_28NM	**28NM BIAS Controler register 0**
12	**BIAS28R1**	BIAS_EN18IO_28NM	**28NM BIAS Controler register 1**
11:8	**BIAS28R2**	BIAS_TUNE_28NM	**28NM BIAS Controler register 2**
7	**GETCRCMARGIN**	GET_CRC_MARGIN	**it will add margin for get crc status when card resp crc not match spec 2cycle from endbit** 1'b0: 8 cycle reserved for get crc status from write data crc endbit 1'b1: 16 cycle reserved for get crc status from write data crc endbit
6	**GETBUSYMARGIN**	GET_BUSY_MARGIN	**it will add margin for get busy state of data0** 1'b0: 1 cycle reserved for get busy state from src status endbit 1'b1: 3cycle reserved for get busy state from src status endbit
5:3	**CMDTA**	CMD_RSP_TA_CNTR	**CMD response turn around period** The turn around cycle = CMD_RSP_TA_CNTR + 2, Only for USH104 mode, this register should be set to 0 in non-UHS104 mode
2:0	**WRTA**	WRDAT_CRCS_TA_CNTR	**Write data and CRC status turn around period** The turn around cycle = WRDAT_CRCS_TA_CNTR + 2, Only for USH104 mode, this register should be set to 0 in non-UHS104 mode

MEDIATEK CONFIDENTIAL
FOR farrwang@synnex.com.tw USE ONLY

This document contains information that is proprietary to MediaTek Inc.
Unauthorized reproduction or disclosure of this information in whole or in part is strictly prohibited.

101300EC **PAD_TUNE** **MSDC Pad Tuning Register** **00000000**

Bit	31	30	29	28	27	26	25	24	23	22	21	20	19	18	17	16
Name	CLKTDLY					CMDRRDLY						CMDRDLY				
Type	RW					RW						RW				
Reset	0	0	0	0	0	0	0	0	0	0		0	0	0	0	0
Bit	15	14	13	12	11	10	9	8	7	6	5	4	3	2	1	0
Name				DATRRDLY								DATWRDLY				
Type				RW								RW				
Reset				0	0	0	0	0				0	0	0	0	0

Bit(s)	Mnemonic	Name	Description
31:27	**CLKTDLY**	PAD_CLK_TXDLY	**CLK Pad TX Delay Control** This register is used to add delay to CLK phase. Total 32 stages
26:22	**CMDRRDLY**	PAD_CMD_RESP_RXDLY	**CMD Response Internal Delay Line Control** This register is used to fine-tune response phase latched by MSDC internal clock Total 32 stages
20:16	**CMDRDLY**	PAD_CMD_RXDLY	**CMD Pad RX Delay Line Control** This register is used to fine-tune CMD pad macro respose latch timing Total 32 stages
12:8	**DATRRDLY**	PAD_DAT_RD_RXDLY	**DAT Pad RX Delay Line Control (for MSDC read only)** This register is used to fine-tune DAT pad macro read data latch timing Total 32 stages
4:0	**DATWRDLY**	PAD_DAT_WR_RXDLY	**Write Data Status Internal Delay Line Control** This register is used to fine-tune write status phase latched by MSDC internal clock Total 32 stages

101300F0 **DAT_RD_DLY0** **MSDC Data Delay Line Register 0** **00000000**

Bit	31	30	29	28	27	26	25	24	23	22	21	20	19	18	17	16
Name				DAT0RDDLY								DAT1RDDLY				
Type				RW								RW				
Reset				0	0	0	0	0				0	0	0	0	0
Bit	15	14	13	12	11	10	9	8	7	6	5	4	3	2	1	0
Name				DAT2RDDLY								DAT3RDDLY				
Type				RW								RW				
Reset				0	0	0	0	0				0	0	0	0	0

Bit(s)	Mnemonic	Name	Description
28:24	**DAT0RDDLY**	DAT0_RD_DLY	**DAT0 Pad RX Delay Line Control (for MSDC RD)** Total 32 stages
20:16	**DAT1RDDLY**	DAT1_RD_DLY	**DAT1 Pad RX Delay Line Control (for MSDC RD)** Total 32 stages
12:8	**DAT2RDDLY**	DAT2_RD_DLY	**DAT2 Pad RX Delay Line Control (for MSDC RD)** Total 32 stages
4:0	**DAT3RDDLY**	DAT3_RD_DLY	**DAT3 Pad RX Delay Line Control (for MSDC RD)** Total 32 stages

MEDIATEK CONFIDENTIAL
FOR farrvang@symtex.com.tw USE ONLY

This document contains information that is proprietary to MediaTek Inc.
Unauthorized reproduction or disclosure of this information in whole or in part is strictly prohibited.

101300F4 **DAT_RD_DLY1** **MSDC Data Delay Line Register 1** **00000000**

Bit	31	30	29	28	27	26	25	24	23	22	21	20	19	18	17	16
Name				DAT4RDDLY								DAT5RDDLY				
Type				RW								RW				
Reset				0	0	0	0	0				0	0	0	0	0
Bit	15	14	13	12	11	10	9	8	7	6	5	4	3	2	1	0
Name				DAT6RDDLY								DAT7RDDLY				
Type				RW								RW				
Reset				0	0	0	0	0				0	0	0	0	0

Bit(s)	Mnemonic	Name	Description
28:24	**DAT4RDDLY**	DAT4_RD_DLY	**DAT4 Pad RX Delay Line Control (for MSDC RD)** Total 32 stages
20:16	**DAT5RDDLY**	DAT5_RD_DLY	**DAT5 Pad RX Delay Line Control (for MSDC RD)** Total 32 stages
12:8	**DAT6RDDLY**	DAT6_RD_DLY	**DAT6 Pad RX Delay Line Control (for MSDC RD)** Total 32 stages
4:0	**DAT7RDDLY**	DAT7_RD_DLY	**DAT7 Pad RX Delay Line Control (for MSDC RD)** Total 32 stages

101300F8 **HW_DBG_SEL** **MSDC H/W Debug Selection Register** **00000000**

Bit	31	30	29	28	27	26	25	24	23	22	21	20	19	18	17	16
Name		DBGWSEL	DBG0SEL						DBGWTSEL		DBG1SEL					
Type		RW	RW						RW		RW					
Reset		0	0	0	0	0	0	0	0	0	0	0	0	0	0	0
Bit	15	14	13	12	11	10	9	8	7	6	5	4	3	2	1	0
Name			DBG2SEL						DBG3SEL							
Type			RW						RW							
Reset			0	0	0	0	0	0	0	0	0	0	0	0	0	0

Bit(s)	Mnemonic	Name	Description
30	**DBGWSEL**	HW_DBG_WRAP_SEL	**H/W debug output selection for wrapper** 0: Select original debug pins 1: Select wrapper debug pins
29:24	**DBG0SEL**	HW_DBG0_SEL	**H/W debug output selection**
23:22	**DBGWTSEL**	HW_DBG_WRAP_TYPE_SEL	**H/W debug output selection for wrapper** 2'd0: Select dbg_in20~dbg_in3b = DRAM_DBG 2'd1: Select dbg_in20~dbg_in3b = RISC_DBG 2'd2: Select dbg_in20~dbg_in3b = AHBM_DBG 2'd3: Select dbg_in20~dbg_in3b = AHBS_DBG
21:16	**DBG1SEL**	HW_DBG1_SEL	**H/W debug output selection**
13:8	**DBG2SEL**	HW_DBG2_SEL	**H/W debug output selection**
7:0	**DBG3SEL**	HW_DBG3_SEL	**H/W debug output selection**

10130100 **MAIN_VER** **MSDC Main Version Register** **20130530**

MEDIATEK CONFIDENTIAL
FOR fairwang@symtex.com.tw USE ONLY

This document contains information that is proprietary to MediaTek Inc.
Unauthorized reproduction or disclosure of this information in whole or in part is strictly prohibited.

Bit	31	30	29	28	27	26	25	24	23	22	21	20	19	18	17	16
Name	MAINVER[31:16]															
Type	RO															
Reset	0	0	1	0	0	0	0	0	0	0	0	1	0	0	1	1
Bit	15	14	13	12	11	10	9	8	7	6	5	4	3	2	1	0
Name	MAINVER[15:0]															
Type	RO															
Reset	0	0	0	0	0	1	0	1	0	0	1	1	0	0	0	0

Bit(s)	Mnemonic	Name	Description
31:0	**MAINVER**	MAIN_VER	**Main Version**

10130104 **ECO_VER** **MSDC ECO Version Register** **00000001**

Bit	31	30	29	28	27	26	25	24	23	22	21	20	19	18	17	16
Name	ECOVER[31:16]															
Type	RO															
Reset	0	0	0	0	0	0	0	0	0	0	0	0	0	0	0	0
Bit	15	14	13	12	11	10	9	8	7	6	5	4	3	2	1	0
Name	ECOVER[15:0]															
Type	RO															
Reset	0	0	0	0	0	0	0	0	0	0	0	0	0	0	0	1

Bit(s)	Mnemonic	Name	Description
31:0	**ECOVER**	ECO_VER	**ECO Version**

MEDIATEK CONFIDENTIAL
FOR farrwang@synnex.com.tw USE ONLY

This document contains information that is proprietary to MediaTek Inc.
Unauthorized reproduction or disclosure of this information in whole or in part is strictly prohibited.

2.21 PCI Express

2.21.1 Registers

PCI_Express Changes LOG

Revision	Date	Author	Change Log
0.1	2012/7/11	James Hu	Initialization
0.2	2013/1/21	James Hu	Integrate All doc
0.3	2013/2/18	Lancelot Lin	Add Host/iNic direct access window
0.4	2013/9/23	HG Chen	Initial for MT7628, from MT7621

Module name: PCI_Express Base address: (+10140000h)

Address	Name	Width	Register Function
10140000	PCICFG	32	PCI Configuration and Status Register
10140008	PCIINT	32	PCI Interrupt after enable mask
1014000C	PCIENA	32	PCI interrupt Enable
10140020	CFGADDR	32	CONFIG TLP ADDR register
10140024	CFGDATA	32	CONFIG TLP DATA register
10140028	MEMBASE	32	Base Address for Memory Space Window
1014002C	IOBASE	32	Base Address for IO Space window
10142010	PCIE0_BAR0SETUP	32	BAR0 Setup of PCIe0 Controller
10142018	PCIE0_IMBASEBAR0	32	Internal Memory Base Address for BAR0 Space of PCIe0
10142030	PCIE0_ID	32	Vendor and Device ID of PCIe0 Controller
10142034	PCIE0_CLASS	32	Class Code and Revision ID for PCIe0 Controller
10142038	PCIE0_SUBID	32	Sub Vendor and Device ID of PCIe0 Controller(This register is valid when PCIE_RC_MODE = 0)
10142050	PCIE0_SI_STAT	32	PCIe0 System Info Status
10142060	PCIE0_DLLECR	32	PCIe0 Data Link Layer Error Counter Register
10142064	PCIE0_ECRCCR	32	PCIe0 ECRC Counter register
10142070	PCIE0_LTSSM_DELAY	32	PCIe0 LTSSM Delay
10148000	PHY_RST	32	PHY Reset (P0)
10148004	PHY_EN	32	PHY Enable (P0)

10140000 PCICFG PCI Configuration and Status Register 021007F2

Bit	31	30	29	28	27	26	25	24	23	22	21	20	19	18	17	16
Name					P2P_BR_DEVNUM2				P2P_BR_DEVNUM1				P2P_BR_DEVNUM0			
Type					RW				RW				RW			
Reset					0	0	1	0	0	0	0	1	0	0	0	0
Bit	15	14	13	12	11	10	9	8	7	6	5	4	3	2	1	0
Name															PCIRST	

FOR MEDIATEK CONFIDENTIAL
fanwang@symtex.com.tw USE ONLY

This document contains information that is proprietary to MediaTek Inc.
Unauthorized reproduction or disclosure of this information in whole or in part is strictly prohibited.

Type															RW	
Reset															1	

Bit(s)	Name	Description
27:24	P2P_BR_DEVNUM2	**Device number setting of Virtual PCI-PCI bridge #2.**
23:20	P2P_BR_DEVNUM1	**Device number setting of Virtual PCI-PCI bridge #1.**
19:16	P2P_BR_DEVNUM0	**Device number setting of Virtual PCI-PCI bridge #0.**
1	PCIRST	**PCI reset control** Available when PCIe Controller in Host mode 1: Assert the PERST_N Pin 0: De-assert the PERST_N Pin

10140008 **PCIINT** **PCI Interrupt after enable mask** **00000000**

Bit	31	30	29	28	27	26	25	24	23	22	21	20	19	18	17	16
Name										**PCIINT2**	**PCIINT1**	**PCIINT0**				
Type										RO	RO	RO				
Reset										0	0	0				
Bit	15	14	13	12	11	10	9	8	7	6	5	4	3	2	1	0
Name																
Type																
Reset																

Bit(s)	Name	Description
22	PCIINT2	**PCIe2 interrupt input in RC mode** This bit indicates the PCIe interrupt from PCIe2 slot 1: PCIe2 slot have interrupt occur 0: PCIe2 slot have no interrupt occur
21	PCIINT1	**PCIe1 interrupt input in RC mode** This bit indicates the PCIe interrupt from PCIe1 slot 1: PCIe1 slot have interrupt occur 0: PCIe1 slot have no interrupt occur
20	PCIINT0	**PCIe0 interrupt input in RC mode** This bit indicates the PCIe interrupt from PCIe0 slot 1: PCIe0 slot have interrupt occur 0: PCIe0 slot have no interrupt occur

1014000C **PCIENA** **PCI interrupt Enable** **00000000**

Bit	31	30	29	28	27	26	25	24	23	22	21	20	19	18	17	16
Name										**PCIINT2_EN**	**PCIINT1_EN**	**PCIINT0_EN**				
Type										RW	RW	RW				
Reset										0	0	0				
Bit	15	14	13	12	11	10	9	8	7	6	5	4	3	2	1	0
Name																
Type																
Reset																

Bit(s)	Name	Description
22	PCIINT2_EN	**PCIINT (PCIe2) Enable Control**

FOR MEDIATEK CONFIDENTIAL
fan.wang@mtx.com.tw USE ONLY

This document contains information that is proprietary to MediaTek Inc.
Unauthorized reproduction or disclosure of this information in whole or in part is strictly prohibited.

Bit(s)	Name	Description
		1: Enable PCIINT (PCIe2) interrupt 0: Disable PCIINT (PCIe2) interrupt
21	PCIINT1_EN	**PCIINT (PCIe1) Enable Control** 1: Enable PCIINT (PCIe1) interrupt 0: Disable PCIINT (PCIe1) interrupt
20	PCIINT0_EN	**PCIINT (PCIe0) Enable Control** 1: Enable PCIINT (PCIe0) interrupt 0: Disable PCIINT (PCIe0) interrupt

10140020 CFGADDR CONFIG TLP ADDR register 00000000

Bit	31	30	29	28	27	26	25	24	23	22	21	20	19	18	17	16
Name					EXTREGNUM				BUSNUM							
Type					RW				RW							
Reset					0	0	0	0	0	0	0	0	0	0	0	0
Bit	15	14	13	12	11	10	9	8	7	6	5	4	3	2	1	0
Name	DEVICENUM					FUNNUM			REGNUM							
Type	RW					RW			RW							
Reset	0	0	0	0	0	0	0	0	0	0	0	0	0	0		

Bit(s)	Name	Description
27:24	EXTREGNUM	**Extent Register Number, only avail for PCIe**
23:16	BUSNUM	**Bus Number**
15:11	DEVICENUM	**Device Number**
10:8	FUNNUM	**Function Number**
7:2	REGNUM	**Register Number**

10140024 CFGDATA CONFIG TLP DATA register 00000000

Bit	31	30	29	28	27	26	25	24	23	22	21	20	19	18	17	16
Name	CFG_DATA[31:16]															
Type	RW															
Reset	0	0	0	0	0	0	0	0	0	0	0	0	0	0	0	0
Bit	15	14	13	12	11	10	9	8	7	6	5	4	3	2	1	0
Name	CFG_DATA[15:0]															
Type	RW															
Reset	0	0	0	0	0	0	0	0	0	0	0	0	0	0	0	0

Bit(s)	Name	Description
31:0	CFG_DATA	**CONFIG_DATA Register** Write to or read from this register will generates a Configuration Cycle in Host mode.

10140028 MEMBASE Base Address for Memory Space Window 00000000

Bit	31	30	29	28	27	26	25	24	23	22	21	20	19	18	17	16
Name	MEMBASE															
Type	RW															
Reset	0	0	0	0	0	0	0	0	0	0	0	0	0	0	0	0

MEDIATEK CONFIDENTIAL
FOR farrwang@synnex.com.tw USE ONLY

This document contains information that is proprietary to MediaTek Inc.
Unauthorized reproduction or disclosure of this information in whole or in part is strictly prohibited.

Bit	15	14	13	12	11	10	9	8	7	6	5	4	3	2	1	0
Name																
Type																
Reset																

Bit(s)	Name	Description
31:16	MEMBASE	**Base Address for Memory Space Window**

1014002C **IOBASE** **Base Address for IO Space window** **00000000**

Bit	31	30	29	28	27	26	25	24	23	22	21	20	19	18	17	16
Name	IOBASE															
Type	RW															
Reset	0	0	0	0	0	0	0	0	0	0	0	0	0	0	0	0
Bit	15	14	13	12	11	10	9	8	7	6	5	4	3	2	1	0
Name																
Type																
Reset																

Bit(s)	Name	Description
31:16	IOBASE	**Base Address for Memory Space Window**

10142010 **PCIE0_BAR0SETUP** **BAR0 Setup of PCIe0 Controller** **01FF0001**

Bit	31	30	29	28	27	26	25	24	23	22	21	20	19	18	17	16
Name	BAR0MSK															
Type	RW															
Reset	0	0	0	0	0	0	0	1	1	1	1	1	1	1	1	1
Bit	15	14	13	12	11	10	9	8	7	6	5	4	3	2	1	0
Name																BAR0ENABLE
Type																RW
Reset																1

Bit(s)	Name	Description
31:16	BAR0MSK	**Setup for Base Address Register BAR0** When the mask bit is '1', the corresponding address bit will be masked as a hit as if no address comparison has been made. When the mask bit is '0', the corresponding address bit will be used for address comparison to determine an address hit. Each base address register can be mapped from 64KB to 2GB. The mask bit will be ignored when the corresponding enable bit is '0'. *Please set this value before the CfgWr to BAR0, else the CFGWr to BAR0 will get unknown result. 16'h7fff: 2G Space 16'h3fff: 1G Space 16'h1fff: 512M Space 16'h0fff: 256M Space 16'h07ff: 128M Space 16'h03ff: 64M Space 16'h01ff: 32M Space(Default) 16'h00ff: 16M Space 16'h007f: 8M Space 16'h003f: 4M Space

MEDIATEK CONFIDENTIAL
FOR farrwane@synex.com.tw USE ONLY

This document contains information that is proprietary to MediaTek Inc.
Unauthorized reproduction or disclosure of this information in whole or in part is strictly prohibited.

Bit(s)	Name	Description
		16'h001f: 2M Space 16'h000f: 1M Space 16'h0007: 512K Space 16'h0003: 256K Space 16'h0001: 128K Space 16'h0000: 64K Space Other: Not Support
0	BAR0ENABLE	**to determind if the BAR0 space will be enabled according to BAR1MSK** 1: Enable. 0: Disable

10142018 **PCIE0_IMBASEBAR0** **Internal Memory Base Address for BAR0 Space of PCIe0** **00000000**

Bit	31	30	29	28	27	26	25	24	23	22	21	20	19	18	17	16
Name	IMBASEBAR0[16:1]															
Type	RW															
Reset	0	0	0	0	0	0	0	0	0	0	0	0	0	0	0	0
Bit	15	14	13	12	11	10	9	8	7	6	5	4	3	2	1	0
Name	IMBASEBAR0[0:0]															
Type	RW															
Reset	0															

Bit(s)	Name	Description
31:15	IMBASEBAR0	**Internal Memory Base address for BAR0** This register is used when CHIP behaves as a PCI Express RC. The actually internal memory address being accessed by an external PCI host can be obtained from the following formula: CHIP address begin accessed = (PCI Address - BAR0) + IMBASEBAR0. When write to this register, the related bit will take effect when the corresponding bit in BAR0MSK bit is 1 and BAR0ENABLE is 1. Internal Memory Base address for BAR0 This register is used when CHIP behaves as a PCIe RC.

10142030 **PCIE0_ID** **Vendor and Device ID of PCIe0 Controller** **08010E8D**

Bit	31	30	29	28	27	26	25	24	23	22	21	20	19	18	17	16
Name	DEVID															
Type	RW															
Reset	0	0	0	0	1	0	0	0	0	0	0	0	0	0	0	1
Bit	15	14	13	12	11	10	9	8	7	6	5	4	3	2	1	0
Name	VENID															
Type	RW															
Reset	0	0	0	0	1	1	1	0	1	0	0	0	1	1	0	1

Bit(s)	Name	Description
31:16	DEVID	**Device ID**
15:0	VENID	**Vendor ID**

FOR MEDIATEK CONFIDENTIAL USE ONLY
fariwang@synnex.com.tw

This document contains information that is proprietary to MediaTek Inc.
Unauthorized reproduction or disclosure of this information in whole or in part is strictly prohibited.

10142034 **PCIE0_CLASS** **Class Code and Revision ID for PCIe0 Controller** **0D800000**

Bit	31	30	29	28	27	26	25	24	23	22	21	20	19	18	17	16
Name	CCODE[23:8]															
Type	RW															
Reset	0	0	0	0	1	1	0	1	1	0	0	0	0	0	0	0
Bit	15	14	13	12	11	10	9	8	7	6	5	4	3	2	1	0
Name	CCODE[7:0]								REVID							
Type	RW								RW							
Reset	0	0	0	0	0	0	0	0	0	0	0	0	0	0	0	0

Bit(s)	Name	Description
31:8	CCODE	**Class Code**
7:0	REVID	**Revision ID**

10142038 **PCIE0_SUBID** **Sub Vendor and Device ID of PCIe0 Controller(This register is valid when PCIE_RC_MODE = 0)** **76210E8D**

Bit	31	30	29	28	27	26	25	24	23	22	21	20	19	18	17	16
Name	SUBSYSID															
Type	RW															
Reset	0	1	1	1	0	1	1	0	0	0	1	0	0	0	0	1
Bit	15	14	13	12	11	10	9	8	7	6	5	4	3	2	1	0
Name	SUBVENID															
Type	RW															
Reset	0	0	0	0	1	1	1	0	1	0	0	0	1	1	0	1

Bit(s)	Name	Description
31:16	SUBSYSID	**Sub Sytem ID**
15:0	SUBVENID	**Sub Vendor ID**

10142050 **PCIE0_SI_STAT** **PCIe0 System Info Status** **00000000**

Bit	31	30	29	28	27	26	25	24	23	22	21	20	19	18	17	16
Name																
Type																
Reset																
Bit	15	14	13	12	11	10	9	8	7	6	5	4	3	2	1	0
Name																LINKUP
Type																RO
Reset																0

Bit(s)	Name	Description
0	LINKUP	**PCIe Linkup Status** 1: Linkup 0: Linkdown

MEDIATEK CONFIDENTIAL
FOR farrwang@symnet.com.tw USE ONLY

© 2014 MediaTek Inc.
This document contains information that is proprietary to MediaTek Inc.
Unauthorized reproduction or disclosure of this information in whole or in part is strictly prohibited.

10142060 **PCIE0_DLLECR** **PCIe0 Data Link Layer Error Counter Register** **00000000**

Bit	31	30	29	28	27	26	25	24	23	22	21	20	19	18	17	16
Name	DLLP_ERR_CNT[31:16]															
Type	RU															
Reset	0	0	0	0	0	0	0	0	0	0	0	0	0	0	0	0
Bit	15	14	13	12	11	10	9	8	7	6	5	4	3	2	1	0
Name	DLLP_ERR_CNT[15:0]															
Type	RU															
Reset	0	0	0	0	0	0	0	0	0	0	0	0	0	0	0	0

Bit(s)	Name	Description
31:0	DLLP_ERR_CNT	**Datalink Layer Error counter register record how many times datalink layer error happened**

10142064 **PCIE0_ECRCCR** **PCIe0 ECRC Counter register** **00000000**

Bit	31	30	29	28	27	26	25	24	23	22	21	20	19	18	17	16
Name	ECRC_ERR_CNT[31:16]															
Type	RU															
Reset	0	0	0	0	0	0	0	0	0	0	0	0	0	0	0	0
Bit	15	14	13	12	11	10	9	8	7	6	5	4	3	2	1	0
Name	ECRC_ERR_CNT[15:0]															
Type	RU															
Reset	0	0	0	0	0	0	0	0	0	0	0	0	0	0	0	0

Bit(s)	Name	Description
31:0	ECRC_ERR_CNT	**ECRC Error counter register record how many times ECRC error happened**

10142070 **PCIE0_LTSSM_DELAY** **PCIe0 LTSSM Delay** **00000F0C**

Bit	31	30	29	28	27	26	25	24	23	22	21	20	19	18	17	16
Name																
Type																
Reset																
Bit	15	14	13	12	11	10	9	8	7	6	5	4	3	2	1	0
Name					L0S_IDLE_DELAY				NFTS_TIMEOUT_DELAY							
Type					RW				RW							
Reset					1	1	1	1	0	0	0	0	1	1	0	0

Bit(s)	Name	Description
11:8	L0S_IDLE_DELAY	**Entry L0S_IDLE delay for various PHY**
7:0	NFTS_TIMEOUT_DELAY	**NFTS timeout delay for various PHY**

10148000 **PHY_RST** **PHY Reset (P0)** **00000001**

Bit	31	30	29	28	27	26	25	24	23	22	21	20	19	18	17	16
Name																
Type																

MEDIATEK CONFIDENTIAL
FOR tarrwang@symtex.com.tw USE ONLY

This document contains information that is proprietary to MediaTek Inc.
Unauthorized reproduction or disclosure of this information in whole or in part is strictly prohibited.

Reset																
Bit	15	14	13	12	11	10	9	8	7	6	5	4	3	2	1	0
Name																P0_PHY_RST
Type																RW
Reset																1

Bit(s)	Name	Description
0	P0_PHY_RST	**Reset for PCIE P0 PHY** 0: Assert reset 1: De-assert reset

10148004 **PHY_EN** **PHY Enable (P0)** **00000001**

Bit	31	30	29	28	27	26	25	24	23	22	21	20	19	18	17	16
Name																
Type																
Reset																
Bit	15	14	13	12	11	10	9	8	7	6	5	4	3	2	1	0
Name																P0_PHY_EN
Type																RW
Reset																1

Bit(s)	Name	Description
0	P0_PHY_EN	**Enable of PCIE P0 PHY** 0: Disable 1: Enable

MEDIATEK CONFIDENTIAL
FOR farrwang@synnex.com.tw USE ONLY

This document contains information that is proprietary to MediaTek Inc.
Unauthorized reproduction or disclosure of this information in whole or in part is strictly prohibited.

2.22 USB Host Controller

2.22.1 Registers

USB_host Changes LOG

Revision	Date	Author	Change Log
0.1	2013/11/22	Chihlung Tsou	Initialization

Module name: USB_host Base address: (+101C0000h)

Address	Name	Width	Register Function
101C0000	HCCAPBASE	32	**HCCAPBASE** Capability Register
101C0004	HCSPARAMS	32	**HCSPARAMS** Structural Parameter
101C0008	HCCPARAMS	32	**HCCPARAMS** Capability Parameter
101C0010	USBCMD	32	**USBCMD** USB Command
101C0014	USBSTS	32	**USBSTS** USB Status
101C0018	USBINTR	32	**USBINTR** USB Interrupt Enable
101C001C	FRINDEX	32	**FRINDEX** USB Frame Index
101C0020	CTRLDSSEGMENT	32	**CTRLDSSEGMENT** 4G Segment Selector
101C0024	PERIODICLISTBASE	32	**PERIODICLISTBASE** Periodic Frame List Base Address Register
101C0028	ASYNCLISTADDR	32	**ASYNCLISTADDR** Asynchronous List Address
101C0050	CONFIGFLAG	32	**CONFIGFLAG** Configured Flag Register
101C0054	PORTSC_1_to_15	32	**PORTSC_1_to_15** Port Status/Control
101C0090	INSNREG00	32	**INSNREG00** Programmable Microframe Base Value
101C0094	INSNREG01	32	**INSNREG01_31_16** Programmable Packet Buffer OUT/IN Thresholds
101C0098	INSNREG02	32	**INSNREG02_11_0** Programmable Packet Buffer Depth
101C009C	INSNREG03	32	**INSNREG03_15** Enable L1 sleep bit in ULPI function control register
101C00A0	INSNREG04	32	**INSNREG04_31_7** ULPI Configuration
101C00A4	INSNREG05	32	**Vbusy** UTMI Configuration Hardware indicator that a write to this register has occurred and the hardware is currently processing the operation defined by the data written

MEDIATEK CONFIDENTIAL
FOR farrwang@sunnex.com.tw USE ONLY

This document contains information that is proprietary to MediaTek Inc.
Unauthorized reproduction or disclosure of this information in whole or in part is strictly prohibited.

101C00A8	**INSNREG06**	32	**INSNREG06_31** AHB Error Captured
101C00AC	**INSNREG07**	32	**INSNREG06_31_0** AHB Master Error Address

101C0000 HCCAPBASE HCCAPBASE 01000010

Bit	31	30	29	28	27	26	25	24	23	22	21	20	19	18	17	16
Name	HCCAPBASE[31:16]															
Type	RW															
Reset	0	0	0	0	0	0	0	1	0	0	0	0	0	0	0	0
Bit	15	14	13	12	11	10	9	8	7	6	5	4	3	2	1	0
Name	HCCAPBASE[15:0]															
Type	RW															
Reset	0	0	0	0	0	0	0	0	0	0	0	1	0	0	0	0

Bit(s)	Name	Description
31:0	HCCAPBASE	**Capability Register**

101C0004 HCSPARAMS HCSPARAMS 00001111

Bit	31	30	29	28	27	26	25	24	23	22	21	20	19	18	17	16
Name	HCSPARAMS[31:16]															
Type	RO															
Reset	0	0	0	0	0	0	0	0	0	0	0	0	0	0	0	0
Bit	15	14	13	12	11	10	9	8	7	6	5	4	3	2	1	0
Name	HCSPARAMS[15:0]															
Type	RO															
Reset	0	0	0	1	0	0	0	1	0	0	0	1	0	0	0	1

Bit(s)	Name	Description
31:0	HCSPARAMS	**Structural Parameter**

101C0008 HCCPARAMS HCCPARAMS 0000A026

Bit	31	30	29	28	27	26	25	24	23	22	21	20	19	18	17	16
Name	HCCPARAMS[31:16]															
Type	RW															
Reset	0	0	0	0	0	0	0	0	0	0	0	0	0	0	0	0
Bit	15	14	13	12	11	10	9	8	7	6	5	4	3	2	1	0
Name	HCCPARAMS[15:0]															
Type	RW															
Reset	1	0	1	0	0	0	0	0	0	0	1	0	0	1	1	0

Bit(s)	Name	Description
31:0	HCCPARAMS	**Capability Parameter**

101C0010 USBCMD USBCMD 00080B00

FOR fanrwang@symtek.com.tw USE ONLY
MEDIATEK CONFIDENTIAL

This document contains information that is proprietary to MediaTek Inc.
Unauthorized reproduction or disclosure of this information in whole or in part is strictly prohibited.

Bit	31	30	29	28	27	26	25	24	23	22	21	20	19	18	17	16
Name	USBCMD[31:16]															
Type	RW															
Reset	0	0	0	0	0	0	0	0	0	0	0	0	1	0	0	0
Bit	15	14	13	12	11	10	9	8	7	6	5	4	3	2	1	0
Name	USBCMD[15:0]															
Type	RW															
Reset	0	0	0	0	1	0	1	1	0	0	0	0	0	0	0	0

Bit(s)	Name	Description
31:0	USBCMD	**USB Command**

101C0014 USBSTS USBSTS 00001000

Bit	31	30	29	28	27	26	25	24	23	22	21	20	19	18	17	16
Name	USBSTS[31:16]															
Type	RW															
Reset	0	0	0	0	0	0	0	0	0	0	0	0	0	0	0	0
Bit	15	14	13	12	11	10	9	8	7	6	5	4	3	2	1	0
Name	USBSTS[15:0]															
Type	RW															
Reset	0	0	0	1	0	0	0	0	0	0	0	0	0	0	0	0

Bit(s)	Name	Description
31:0	USBSTS	**USB Status**

101C0018 USBINTR USBINTR 00000000

Bit	31	30	29	28	27	26	25	24	23	22	21	20	19	18	17	16
Name	USBINTR[31:16]															
Type	RW															
Reset	0	0	0	0	0	0	0	0	0	0	0	0	0	0	0	0
Bit	15	14	13	12	11	10	9	8	7	6	5	4	3	2	1	0
Name	USBINTR[15:0]															
Type	RW															
Reset	0	0	0	0	0	0	0	0	0	0	0	0	0	0	0	0

Bit(s)	Name	Description
31:0	USBINTR	**USB Interrupt Enable**

101C001C FRINDEX FRINDEX 00000000

Bit	31	30	29	28	27	26	25	24	23	22	21	20	19	18	17	16
Name	FRINDEX[31:16]															
Type	RW															
Reset	0	0	0	0	0	0	0	0	0	0	0	0	0	0	0	0
Bit	15	14	13	12	11	10	9	8	7	6	5	4	3	2	1	0
Name	FRINDEX[15:0]															
Type	RW															
Reset	0	0	0	0	0	0	0	0	0	0	0	0	0	0	0	0

Bit(s)	Name	Description

FOR MEDIATEK CONFIDENTIAL
fairwang@symnex.com.tw USE ONLY

This document contains information that is proprietary to MediaTek Inc.
Unauthorized reproduction or disclosure of this information in whole or in part is strictly prohibited.

Bit(s)	Name	Description
31:0	FRINDEX	**USB Frame Index**

101C0020 **CTRLDSSEGMENT** **CTRLDSSEGMENT** **00000000**

Bit	31	30	29	28	27	26	25	24	23	22	21	20	19	18	17	16
Name	CTRLDSSEGMENT[31:16]															
Type	RW															
Reset	0	0	0	0	0	0	0	0	0	0	0	0	0	0	0	0
Bit	15	14	13	12	11	10	9	8	7	6	5	4	3	2	1	0
Name	CTRLDSSEGMENT[15:0]															
Type	RW															
Reset	0	0	0	0	0	0	0	0	0	0	0	0	0	0	0	0

Bit(s)	Name	Description
31:0	CTRLDSSEGMENT	**4G Segment Selector**

101C0024 **PERIODICLISTBASE** **PERIODICLISTBASE** **00000000**

Bit	31	30	29	28	27	26	25	24	23	22	21	20	19	18	17	16
Name	PERIODICLISTBASE[31:16]															
Type	RW															
Reset	0	0	0	0	0	0	0	0	0	0	0	0	0	0	0	0
Bit	15	14	13	12	11	10	9	8	7	6	5	4	3	2	1	0
Name	PERIODICLISTBASE[15:0]															
Type	RW															
Reset	0	0	0	0	0	0	0	0	0	0	0	0	0	0	0	0

Bit(s)	Name	Description
31:0	PERIODICLISTBASE	**Periodic Frame List Base Address Register**

101C0028 **ASYNCLISTADDR** **ASYNCLISTADDR** **00000000**

Bit	31	30	29	28	27	26	25	24	23	22	21	20	19	18	17	16
Name	ASYNCLISTADDR[31:16]															
Type	RW															
Reset	0	0	0	0	0	0	0	0	0	0	0	0	0	0	0	0
Bit	15	14	13	12	11	10	9	8	7	6	5	4	3	2	1	0
Name	ASYNCLISTADDR[15:0]															
Type	RW															
Reset	0	0	0	0	0	0	0	0	0	0	0	0	0	0	0	0

Bit(s)	Name	Description
31:0	ASYNCLISTADDR	**Asynchronous List Address**

101C0050 **CONFIGFLAG** **CONFIGFLAG** **00000000**

Bit	31	30	29	28	27	26	25	24	23	22	21	20	19	18	17	16

MEDIATEK CONFIDENTIAL
FOR farrwang@synnex.com.tw USE ONLY

This document contains information that is proprietary to MediaTek Inc.
Unauthorized reproduction or disclosure of this information in whole or in part is strictly prohibited.

Name	CONFIGFLAG[31:16]															
Type	RW															
Reset	0	0	0	0	0	0	0	0	0	0	0	0	0	0	0	0
Bit	15	14	13	12	11	10	9	8	7	6	5	4	3	2	1	0
Name	CONFIGFLAG[15:0]															
Type	RW															
Reset	0	0	0	0	0	0	0	0	0	0	0	0	0	0	0	0

Bit(s)	Name	Description
31:0	CONFIGFLAG	**Configured Flag Register**

101C0054 **PORTSC_1_to_15** **PORTSC_1_to_15** **00002000**

Bit	31	30	29	28	27	26	25	24	23	22	21	20	19	18	17	16
Name	PORTSC_1_to_15[31:16]															
Type	RW															
Reset	0	0	0	0	0	0	0	0	0	0	0	0	0	0	0	0
Bit	15	14	13	12	11	10	9	8	7	6	5	4	3	2	1	0
Name	PORTSC_1_to_15[15:0]															
Type	RW															
Reset	0	0	1	0	0	0	0	0	0	0	0	0	0	0	0	0

Bit(s)	Name	Description
31:0	PORTSC_1_to_15	**Port Status/Control**

101C0090 **INSNREG00** **INSNREG00** **00000000**

Bit	31	30	29	28	27	26	25	24	23	22	21	20	19	18	17	16
Name	INSNREG00_31_20												INSNREG00_19_14[5:2]			
Type	RO												RW			
Reset	0	0	0	0	0	0	0	0	0	0	0	0	0	0	0	0
Bit	15	14	13	12	11	10	9	8	7	6	5	4	3	2	1	0
Name	INSNREG00_19_14[1:0]		INSNREG00_13_12		INSNREG00_11_1											INSNREG00_0
Type	RW		RW		RW											RW
Reset	0	0	0	0	0	0	0	0	0	0	0	0	0	0	0	0

Bit(s)	Name	Description
31:20	INSNREG00_31_20	**Programmable Microframe Base Value** Allows you to change the microframe length value (default is microframe SOF = 125 us) to reduce the simulation time. Note: Do not enable this register for the gate-level netlist.
19:14	INSNREG00_19_14	**This field is only used for debug purposes.** In heterogeneous mode, if the per port clock gets out of sync (but sill within in ppm limits) of the phy_clk , then the per port sof counter needs some correction relative to the global sof counter. The RTL corrects itself if this happens.
13:12	INSNREG00_13_12	**This value is used as the 1-microframe counter with byte interface (8-**

MEDIATEK CONFIDENTIAL
FOR fairwang@synnex.com.tw USE ONLY

This document contains information that is proprietary to MediaTek Inc.
Unauthorized reproduction or disclosure of this information in whole or in part is strictly prohibited.

Bit(s)	Name	Description
		bits).
11:1	INSNREG00_11_1	**This value is used as the 1-microframe counter with word interface (16-bits).**
0	INSNREG00_0	**Writing 1'b1 enables this register.**

101C0094 **INSNREG01** **INSNREG01_31_16** **00200020**

Bit	31	30	29	28	27	26	25	24	23	22	21	20	19	18	17	16
Name	OUT_Threshold															
Type	RW															
Reset	0	0	0	0	0	0	0	0	0	0	1	0	0	0	0	0
Bit	15	14	13	12	11	10	9	8	7	6	5	4	3	2	1	0
Name	IN_Threshold															
Type	RW															
Reset	0	0	0	0	0	0	0	0	0	0	1	0	0	0	0	0

Bit(s)	Name	Description
31:16	OUT_Threshold	**The OUT threshold is used to start the USB transfer** as soon as the OUT threshold amount of data is fetched from system memory. It is also used to disconnect the data fetch, if the threshold amount of space is not available in the Packet Buffer.
15:0	IN_Threshold	**The IN threshold is used to start the memory transfer** as soon as the IN threshold amount of data is available in the Packet Buffer. It is also used to disconnect the data write, if the threshold amount of data is not available in the Packet Buffer.

101C0098 **INSNREG02** **INSNREG02_11_0** **00000080**

Bit	31	30	29	28	27	26	25	24	23	22	21	20	19	18	17	16
Name																
Type																
Reset																
Bit	15	14	13	12	11	10	9	8	7	6	5	4	3	2	1	0
Name					INSNREG02_11_0											
Type					RW											
Reset					0	0	0	0	1	0	0	0	0	0	0	0

Bit(s)	Name	Description
11:0	INSNREG02_11_0	**The value specified here is the number of DWORDs (32-bit entries).**

101C009C **INSNREG03** **INSNREG03_15** **00002001**

Bit	31	30	29	28	27	26	25	24	23	22	21	20	19	18	17	16
Name																
Type																
Reset																
Bit	15	14	13	12	11	10	9	8	7	6	5	4	3	2	1	0
Name	INS	INS	INS	INSNREG03_12_1			INS	INSNREG03_8_1								INS

MEDIATEK CONFIDENTIAL
FOR fairwang@synnex.com.tw USE ONLY

This document contains information that is proprietary to MediaTek Inc.
Unauthorized reproduction or disclosure of this information in whole or in part is strictly prohibited.

	NREG03_15	NREG03_14	NREG03_13	0			NREG03_9									NREG03_0
Type	RW	RW	RW	RW			RW	RW								RW
Reset	0	0	1	0	0	0	0	0	0	0	0	0	0	0	0	1

Bit(s)	Name	Description
15	INSNREG03_15	**During L1 sleep, when interfacing with ULPI PHY,the controller keeps the SuspendM bit 1** (Powered) in the ULPI function Control register.
14	INSNREG03_14	**This bit controls the End of Resume sequence of the EHCI host controller.**
13	INSNREG03_13	**When set to 1 (default), the core ignores the linestate checking when transmitting SOF during the SE0_NAK test mode.**
12:10	INSNREG03_12_10	**This field specifies the extra delays in phy_clks to** be added to the "Transmit to Transmit turnaround delay" value maintained in the core.
9	INSNREG03_9	**In CONFIG1 mode only**
8:1	INSNREG03_8_1	**This value indicates the additional number of** bytes to be accommodated for the time-available calculation.
0	INSNREG03_0	**- 1'b1: Enables this function** - 1'b0: Disables this function

101C00A0 **INSNREG04** **INSNREG04_31_7** **00000000**

Bit	31	30	29	28	27	26	25	24	23	22	21	20	19	18	17	16
Name	RSV[24:9]															
Type	RO															
Reset	0	0	0	0	0	0	0	0	0	0	0	0	0	0	0	0
Bit	15	14	13	12	11	10	9	8	7	6	5	4	3	2	1	0
Name	RSV[8:0]									INSNREG04_6	INSNREG04_5	INSNREG04_4		INSNREG04_2	INSNREG04_1	INSNREG04_0
Type	RO									RW	RW	RW		RW	RW	RW
Reset	0	0	0	0	0	0	0	0	0	0	0	0		0	0	0

Bit(s)	Name	Description
31:7	RSV	
6	INSNREG04_6	**This field is set to all** 1s by default. This field is valid if there is at least one port with ULPI interface
5	INSNREG04_5	**the automatic feature is** enabled. The Suspend signal is deasserted (logic level 1'b1) when run/stop is reset by software, but the hchalted bit is not yet set. 1'b1: Disables the automatic feature
4	INSNREG04_4	**1'b1: NAK reload fix disabled. (Incorrect NAK** reload transition at the end of a microframe for backward compatibility with Release 2.40c. For more information see the USB 2.0 Host-AHB Release Notes.

MEDIATEK CONFIDENTIAL
FOR farrwang@sjmex.com.tw USE ONLY

This document contains information that is proprietary to MediaTek Inc.
Unauthorized reproduction or disclosure of this information in whole or in part is strictly prohibited.

Bit(s)	Name	Description
		Reset value is 1'b0. Attribute is R/W.
2	INSNREG04_2	**Scales down port enumeration time.** Reset value is 1'b0.
1	INSNREG04_1	**The HCCPARAMS register's bits 17,** 15:4, and 2:0 become writable. Upon system reset, these bits are 0.
0	INSNREG04_0	**The HCSPARAMS register becomes** writable. Upon system reset, this bit is 0.

101C00A4 INSNREG05 Vbusy **00021000**

Bit	31	30	29	28	27	26	25	24	23	22	21	20	19	18	17	16
Name															Vbusy	VPort[3:3]
Type															RO	RO
Reset															1	0
Bit	15	14	13	12	11	10	9	8	7	6	5	4	3	2	1	0
Name	VPort[2:0]			VControlLoadM	Vcontrol				Vstatus							
Type	RO			RO	RO				RO							
Reset	0	0	0	1	0	0	0	0	0	0	0	0	0	0	0	0

Bit(s)	Name	Description
17	Vbusy	**Hardware indicator** that a write to this register has occurred and the hardware is currently processing the operation defined by the data written. When processing is finished, this bit is cleared.
16:13	VPort	**Valid values range** from 1 to 15 depending on coreConsultant configuration.
12	VControlLoadM	**- 1'b0: Load** - 1'b1: NOP, (Software R/W)
11:8	Vcontrol	
7:0	Vstatus	

101C00A8 INSNREG06 INSNREG06_31 **00000000**

Bit	31	30	29	28	27	26	25	24	23	22	21	20	19	18	17	16
Name	INSNREG06_31															
Type	RW															
Reset	0															
Bit	15	14	13	12	11	10	9	8	7	6	5	4	3	2	1	0
Name					INSNREG06_11_9			INSNREG06_8_4					INSNREG06_3_0			

MEDIATEK CONFIDENTIAL
FOR carrwang@sunnex.com.tw USE ONLY

This document contains information that is proprietary to MediaTek Inc.
Unauthorized reproduction or disclosure of this information in whole or in part is strictly prohibited.

Type					RO			RO					RO			
Reset					0	0	0	0	0	0	0	0	0	0	0	0

Bit(s)	Name	Description
31	INSNREG06_31	**Indicator that an AHB error was encountered and** values were captured. To clear this field the application must write a 0 to it.
11:9	INSNREG06_11_9	**(RO) HBURST Value of the control phase** at which the AHB error occurred.
8:4	INSNREG06_8_4	**(RO) Number of beats expected in the** burst at which the AHB error occurred. Valid values are 0 to 16. - 5'b10001 - 5b11111: Reserved - 5'b00000 - 5b10000: Valid
3:0	INSNREG06_3_0	**Number of successfully-completed** beats in the current burst before the AHB error occurred.

101C00AC **INSNREG07** **INSNREG06_31_0** **00000000**

Bit	31	30	29	28	27	26	25	24	23	22	21	20	19	18	17	16
Name	**INSNREG06_31_0[31:16]**															
Type	RO															
Reset	0	0	0	0	0	0	0	0	0	0	0	0	0	0	0	0
Bit	15	14	13	12	11	10	9	8	7	6	5	4	3	2	1	0
Name	**INSNREG06_31_0[15:0]**															
Type	RO															
Reset	0	0	0	0	0	0	0	0	0	0	0	0	0	0	0	0

Bit(s)	Name	Description
31:0	INSNREG06_31_0	**(RO) AHB address of the control phase at** which the AHB error occurred

MEDIATEK CONFIDENTIAL
FOR farrwang@sunnex.com.tw USE ONLY

This document contains information that is proprietary to MediaTek Inc.
Unauthorized reproduction or disclosure of this information in whole or in part is strictly prohibited.

3. List

Abbrev.	Description
AC	Access Category
ACK	Acknowledge/ Acknowledgement
ACL	Access Control List
ACPR	Adjacent Channel Power Ratio
AD/DA	Analog to Digital/Digital to Analog converter
ADC	Analog-to-Digital Converter
AES	Advanced Encryption Standard
AFC	Automatic Frequency Calibration
AGC	Auto Gain Control
AIFS	Arbitration Inter-Frame Space
AIFSN	Arbitration Inter-Frame Spacing Number
ALC	Automatic Level Control
A-MPDU	Aggregate MAC Protocol Data Unit
A-MSDU	Aggregation of MAC Service Data Units
AP	Access Point
ASIC	Application-Specific Integrated Circuit
ASME	American Society of Mechanical Engineers
ASYNC	Asynchronous
BA	Block Acknowledgement
BAC	Block Acknowledgement Control
BAR	Base Address Register
BBP	Baseband Processor
BGSEL	Band Gap Select
BIST	Built-In Self-Test
BSC	Basic Spacing between Centers
BJT	Bipolar Junction Transistor
BSSID	Basic Service Set Identifier
BW	Bandwidth
CAS	Column Address Strobe
CCA	Clear Channel Assessment
CCK	Complementary Code Keying
CCMP	Counter Mode with Cipher Block Chaining Message Authentication Code Protocol
CCX	Cisco Compatible Extensions
CF-END	Control Frame End
CF-ACK	Control Frame Acknowledgement
CLK	Clock
CPU	Central Processing Unit
CRC	Cyclic Redundancy Check
CSR	Control Status Register

Abbrev.	Description
CTS	Clear to Send
CW	Contention Window
CWmax	Maximum Contention Window
CWmin	Minimum Contention Window
DAC	Digital-To-Analog Converter
DCF	Distributed Coordination Function
DDONE	DMA Done
DDR	Double Data Rate
DFT	Discrete Fourier Transform
DIFS	DCF Inter-Frame Space
DMA	Direct Memory Access
DQ	DRAM Data
DQS	Data Strobe
DSCP	Differentiated Services Code Point
DSP	Digital Signal Processor
DW	DWORD
EAP	Expert Antenna Processor
ED	Energy Detection
EDCA	Enhanced Distributed Channel Access
EECS	EEPROM chip select
EEDI	EEPROM data input
EEDO	EEPROM data output
EEPROM	Electrically Erasable Programmable Read-Only Memory
eFUSE	electrical Fuse
EESK	EEPROM source clock
EIFS	Extended Inter-Frame Space
EIV	Extend Initialization Vector
EVM	Error Vector Magnitude
FDS	Frequency Domain Spreading
FEM	Front-End Module
FEQ	Frequency Equalization
FIFO	First In First Out
FSM	Finite-State Machine
GDM	GTP Director Module
GEM	GPON Encapsulation Method
GF	Green Field
GND	Ground
GP	General Purpose
GPO	General Purpose Output
GPON	Gigabit Passive Optical Network
GPIO	General Purpose Input/Output
GPRS	General Packet Radio Service

MEDIATEK CONFIDENTIAL
FOR fanwang@symnex.com.tw USE ONLY

This document contains information that is proprietary to MediaTek Inc.
Unauthorized reproduction or disclosure of this information in whole or in part is strictly prohibited.

Abbrev.	Description
GTP	GPRS Tunneling Protocol
HCCA	HCF Controlled Channel Access
HCF	Hybrid Coordination Function
HT	High Throughput
HTC	High Throughput Control
I	In phase
ICV	Integrity Check Value
IFS	Inter-Frame Space
iNIC	Intelligent Network Interface Card
IV	Initialization Vector
I^2C	Inter-Integrated Circuit
I^2S	Integrated Inter-Chip Sound
I/O	Input/Output
IPI	Idle Power Indicator
IQ	In phase/Quadrature phase
JEDEC	Joint Electron Devices Engineering Council
JTAG	Joint Test Action Group
kbps	kilo (1000) bits per second
KB	Kilo (1024) Bytes
LCP	Linear Complementarity Problem
LDO	Low-Dropout Regulator
LDODIG	LDO for DIGital part output voltage
LED	Light-Emitting Diode
LTSSM	Link Training and Status State Machine
LNA	Low Noise Amplifier
LO	Local Oscillator
L-SIG	Legacy Signal Field
MAC	Medium Access Control
MCU	Microcontroller Unit
MCS	Modulation and Coding Scheme
MDC	Management Data Clock
MDIO	Management Data Input/Output
MEM	Memory
MFB	MCS Feedback
MFS	MFB Sequence
MIC	Message Integrity Code
MIMO	Multiple-Input Multiple-Output
MLD	Multicast Listener Discovery
MLNA	Monolithic Low Noise Amplifier
MM	Mixed Mode
MOSFET	Metal Oxide Semiconductor Field Effect Transistor
MPDU	MAC Protocol Data Units
MSB	Most Significant Bit

Abbrev.	Description
NAV	Network Allocation Vector
NAS	Network-Attached Server
NAT	Network Address Translation
NDP	Null Data Packet
NVM	Non-Volatile Memory
OCP	Open Core Protocol
ODT	On-die Termination
Oen	Output Enable
OFDM	Orthogonal Frequency-Division Multiplexing
OoS	Out-of-Service
OSC	Open Sound Control
PA	Power Amplifier
PAPE	Provider Authentication Policy Extension
PBC	Push Button Configuration
PBF	Packet Buffer
PCB	Printed Circuit Board
PCF	Point Coordination Function
PCM	Pulse-Code Modulation
PD	Preamble Detection
PFD	Phase-Frequency Detector
PHY	Physical Layer
PIFS	PCF Interframe Space
PLCP	Physical Layer Convergence Protocol
PLL	Phase-Locked Loop
PME	Physical Medium Entities
PMU	Power Management Unit
PN	Packet Number
PPLL	Programmable PLL
PROM	Programmable Read-Only Memory
PSDU	Physical layer Service Data Unit
PSI	Power supply Strength Indication
PSM	Power Save Mode
PTN	Packet Transport Network
QoS	Quality of Service
Q	Quadrature
R2P	Rbus to Pbus
RDG	Reverse Direction Grant
RAM	Random Access Memory
RC	Root Complex
RF	Radio Frequency
RGMII	Reduced Gigabit Media Independent Interface
RH	Relative Humidity
RoHS	Restriction on Hazardous Substances

MEDIATEK CONFIDENTIAL
FOR fuyang@ symnex.com INTERNAL USE ONLY

© 2014 MediaTek Inc.
This document contains information that is proprietary to MediaTek Inc.
Unauthorized reproduction or disclosure of this information in whole or in part is strictly prohibited.

Abbrev.	Description
ROM	Read-Only Memory
ROS	Rx Offset
RSSI	Received Signal Strength Indication (Indicator)
RTS	Request to Send
RvMII	Reverse Media Independent Interface
Rx	Receive
RXD	Received Data
RXINFO	Receive Information
RXWI	Receive Wireless Information
S	Stream
SDHC	Secure Digital High Capacity
SDIO	Secure Digital Input Output
SDRAM	Synchronous Dynamic Random Access Memory
SEC	Security
SGI	Short Guard Interval
SIFS	Short Inter-Frame Space
SoC	System-on-a-Chip
SPI	Serial Peripheral Interface
SRAM	Static Random Access Memory
SSCG	Spread Spectrum Clock Generator
STBC	Space–Time Block Code
SW	Switch Regulator
TA	Transmitter Address
TBTT	Target Beacon Transmission Time
TDLS	Tunnel Direct Link Setup
TKIP	Temporal Key Integrity Protocol
TOS	Tx Offset

Abbrev.	Description
TRSW	Tx/Rx Switch
TSF	Timing Synchronization Function
TSSI	Transmit Signal Strength Indication
Tx	Transmit
TxBF	Transmit Beamforming
TXD	Transmitted Data
TXDAC	Transmit Digital-Analog Converter
TXINFO	Transmit Information
TXOP	Opportunity to Transmit
TXWI	Tx Wireless Information
UART	Universal Asynchronous Rx/ Tx
USB	Universal Serial Bus
UTIF	Universal Test Interface
VGA	Variable Gain Amplifier
VCO	Voltage Controlled Oscillator
VIH	High Level Input Voltage
VIL	Low Level Input Voltage
VoIP	Voice over IP
VPID	Virtual Path Identifier
WCID	Wireless Client Identification
WEP	Wired Equivalent
WI	Wireless Information
WIV	Wireless Information Valid
WMM	Wi-Fi Multimedia
WPA	Wi-Fi Protected Access
WPDMA	Wireless Polarization Division Multiple Access
WS	Word Select

MEDIATEK CONFIDENTIAL
FOR farrwang@symnex.com.tw USE ONLY

This document contains information that is proprietary to MediaTek Inc.
Unauthorized reproduction or disclosure of this information in whole or in part is strictly prohibited.