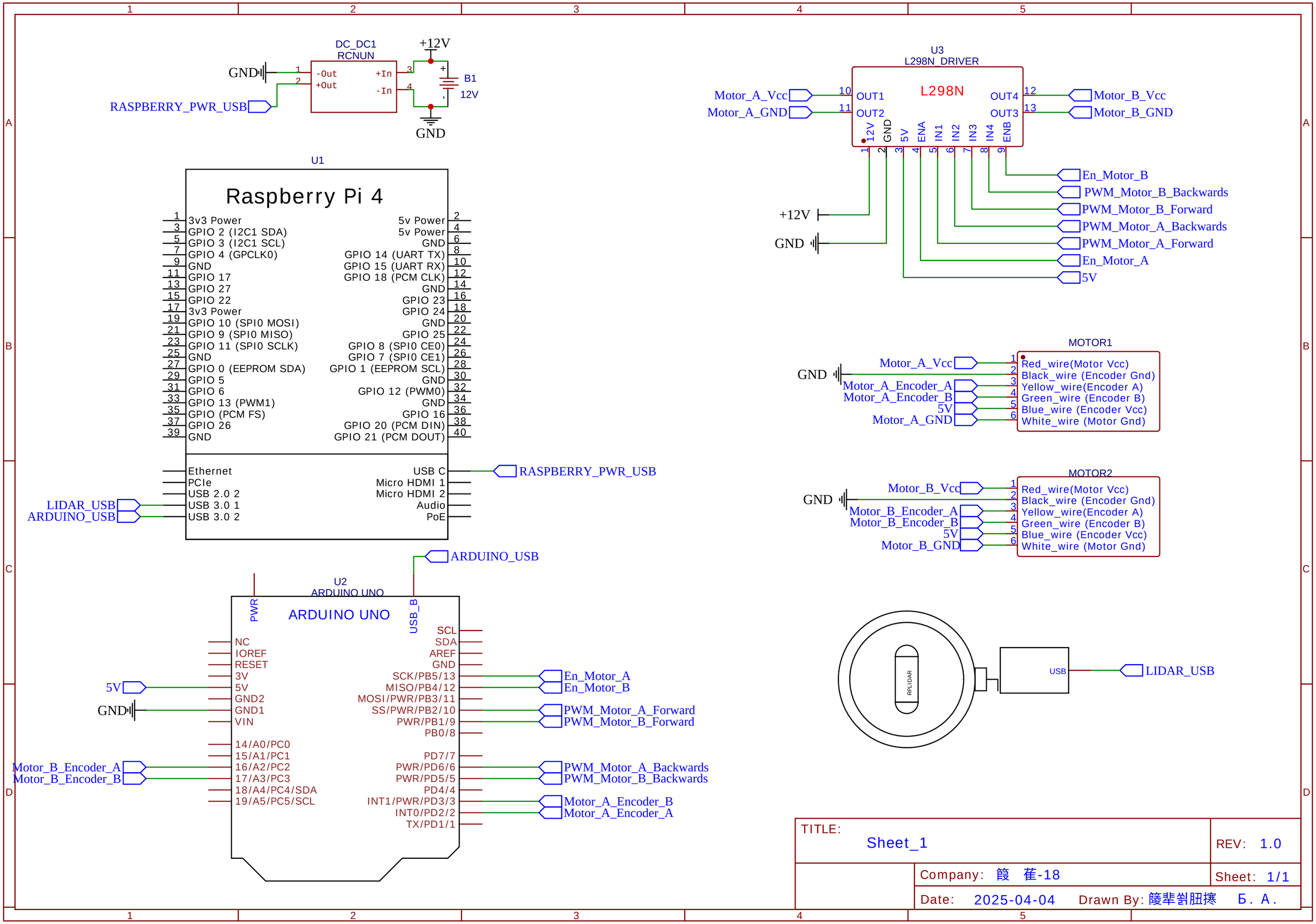
DC_DC1
RCNUN
-Out
+Out
+In
-In
+12V
B1
12V
GND
RASPBERRY_PWR_USB
U1
Raspberry Pi 4
3v3 Power
GPIO 2 (I2C1 SDA)
GPIO 3 (I2C1 SCL)
GPIO 4 (GPCLK0)
GND
GPIO 17
GPIO 27
GPIO 22
3v3 Power
GPIO 10 (SPI0 MOSI)
GPIO 9 (SPI0 MISO)
GPIO 11 (SPI0 SCLK)
GND
GPIO 0 (EEPROM SDA)
GPIO 5
GPIO 6
GPIO 13 (PWM1)
GPIO (PCM FS)
GPIO 26
GND
5v Power
5v Power
GND
GPIO 14 (UART TX)
GPIO 15 (UART RX)
GPIO 18 (PCM CLK)
GND
GPIO 23
GPIO 24
GND
GPIO 25
GPIO 8 (SPI0 CE0)
GPIO 7 (SPI0 CE1)
GPIO 1 (EEPROM SCL)
GND
GPIO 12 (PWM0)
GND
GPIO 16
GPIO 20 (PCM DIN)
GPIO 21 (PCM DOUT)
Ethernet
PCIe
USB 2.0 2
USB 3.0 1
USB 3.0 2
USB C
Micro HDMI 1
Micro HDMI 2
Audio
PoE
LIDAR_USB
ARDUINO_USB
U2
ARDUINO UNO
PWR
USB_B
NC
IOREF
RESET
3V
5V
GND2
GND1
VIN
14/A0/PC0
15/A1/PC1
16/A2/PC2
17/A3/PC3
18/A4/PC4/SDA
19/A5/PC5/SCL
SCL
SDA
AREF
GND
SCK/PB5/13
MISO/PB4/12
MOSI/PWR/PB3/11
SS/PWR/PB2/10
PWR/PB1/9
PB0/8
PD7/7
PWR/PD6/6
PWR/PD5/5
PD4/4
INT1/PWR/PD3/3
INT0/PD2/2
TX/PD1/1
En_Motor_A
En_Motor_B
PWM_Motor_A_Forward
PWM_Motor_B_Forward
PWM_Motor_A_Backwards
PWM_Motor_B_Backwards
Motor_A_Encoder_B
Motor_A_Encoder_A
Motor_B_Encoder_A
Motor_B_Encoder_B
U3
L298N_DRIVER
L298N
OUT1
OUT2
OUT4
OUT3
12V
GND
5V
ENA
IN1
IN2
IN3
IN4
ENB
Motor_A_Vcc
Motor_A_GND
Motor_B_Vcc
Motor_B_GND
En_Motor_B
PWM_Motor_B_Backwards
PWM_Motor_B_Forward
PWM_Motor_A_Backwards
PWM_Motor_A_Forward
En_Motor_A
5V
MOTOR1
Red_wire(Motor Vcc)
Black_wire (Encoder Gnd)
Yellow_wire(Encoder A)
Green_wire (Encoder B)
Blue_wire (Encoder Vcc)
White_wire (Motor Gnd)
MOTOR2
Red_wire(Motor Vcc)
Black_wire (Encoder Gnd)
Yellow_wire(Encoder A)
Green_wire (Encoder B)
Blue_wire (Encoder Vcc)
White_wire (Motor Gnd)
RPLIDAR
USB
LIDAR_USB
TITLE:
Sheet_1
REV: 1.0
Company: 餕 萑-18
Sheet: 1/1
Date: 2025-04-04
Drawn By: 篾辈剀肽攓 Б. А.