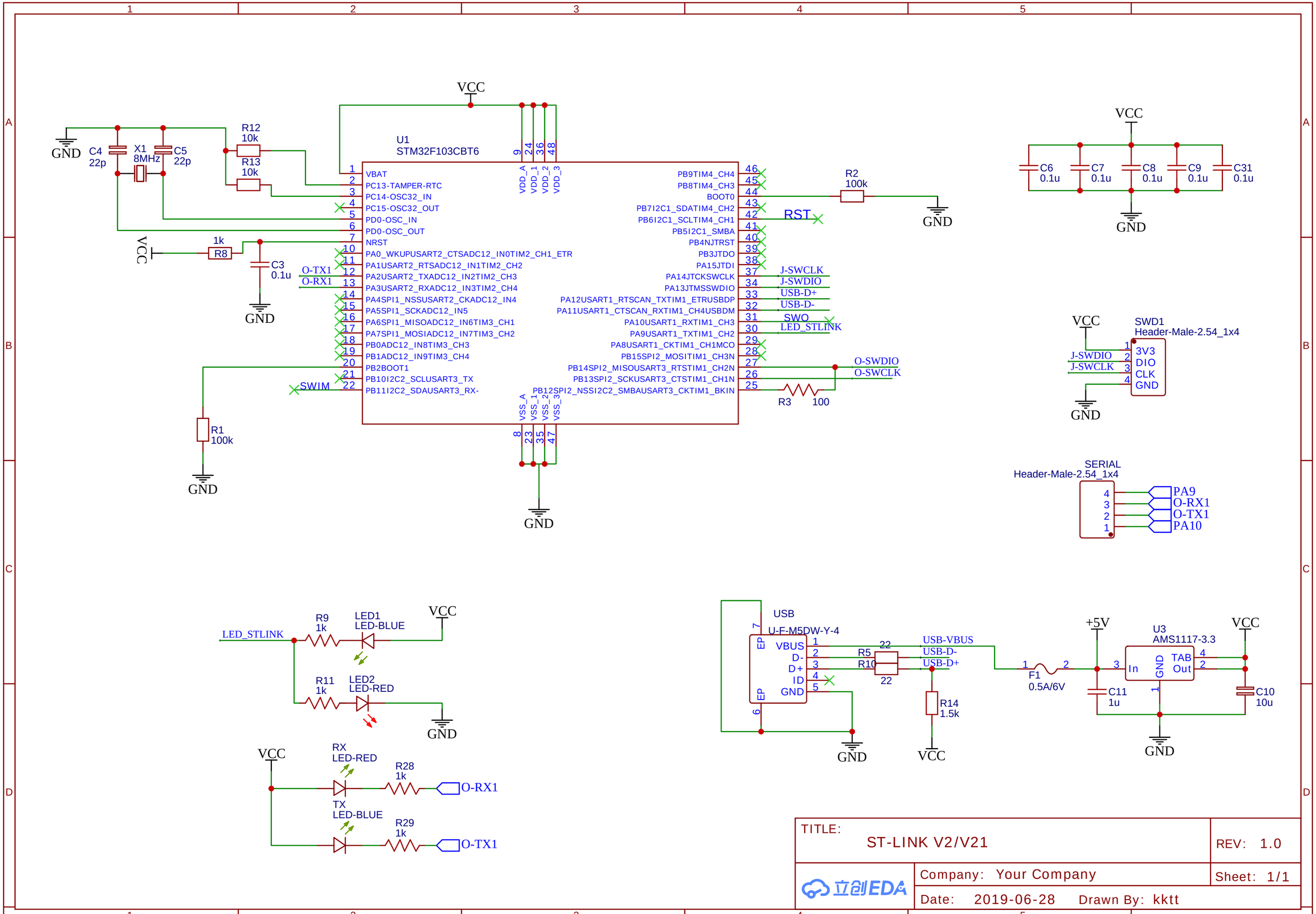

TITLE: ST-LINK V2/V21	REV: 1.0
Company: Your Company	Sheet: 1/1
Date: 2019-06-28 Drawn By: kktt	

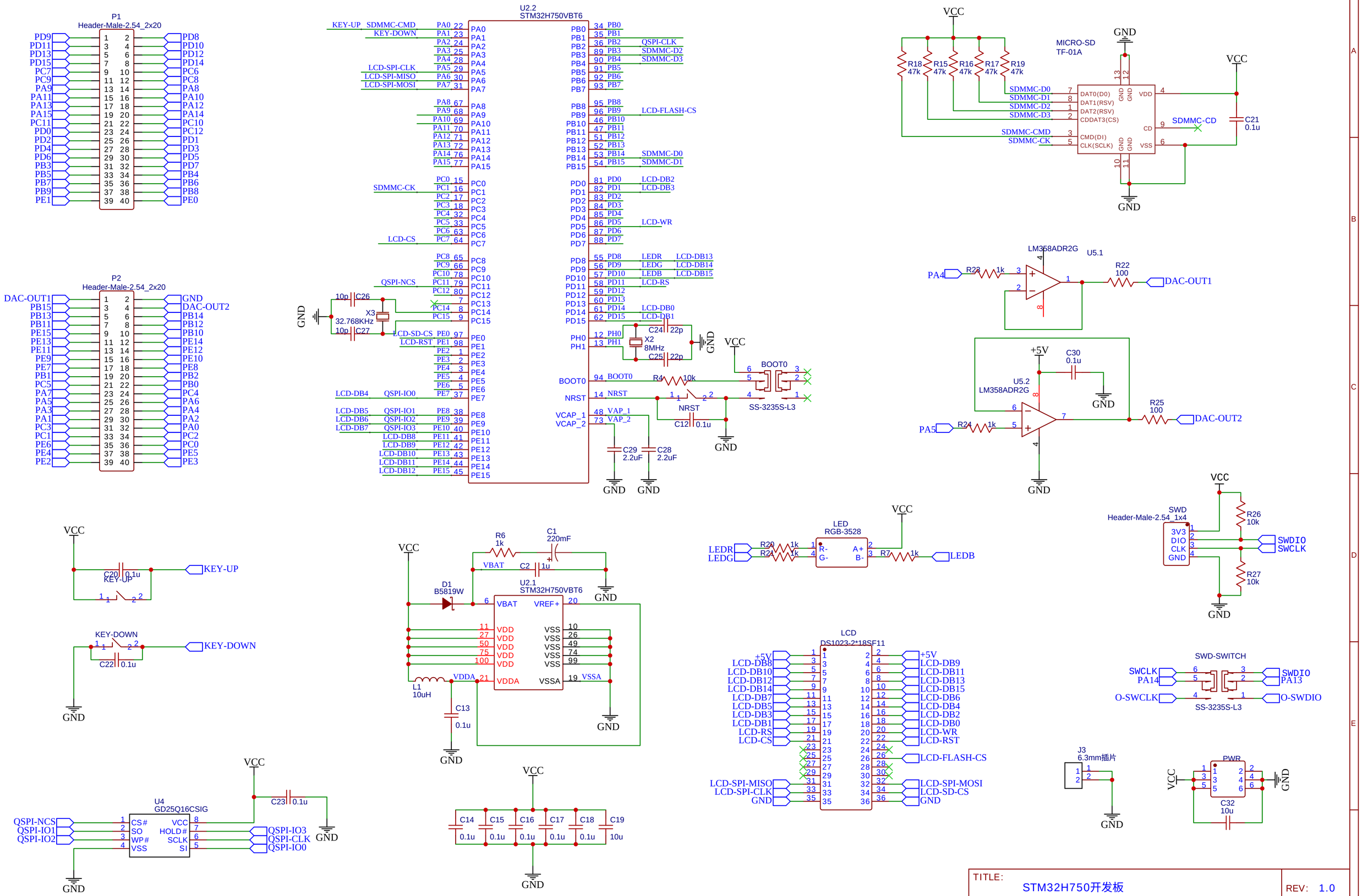
P1
Header-Male-2.54_2x20
P2
Header-Male-2.54_2x20
U2.2
STM32H750VBT6
U2.1
STM32H750VBT6
MICRO-SD
TF-01A
U5.1
LM358ADR2G
U5.2
LM358ADR2G
LED
RGB-3528
SWD
Header-Male-2.54_1x4
SWD-SWITCH
SS-3235S-L3
LCD
DS1023-2*18SF11
J3
6.3mm插片
PWR
U4
GD25Q16CSIG
VCC
GND
KEY-UP
KEY-DOWN
SDMMC-CD
DAC-OUT1
DAC-OUT2
SWDIO
SWCLK
O-SWDIO
LEDR
LEDG
LEDB
BOOT0
NRST
X2
8MHz
X3
32.768KHz
VCAP_1
VCAP_2
VBAT
VREF+
VDDA
VSSA
L1
10uH
D1
B5819W
C1
220mF
R6
1k
C2
1u
C13
0.1u
C29
2.2uF
C28
2.2uF
C12
0.1u
C24
22p
C25
22p
C21
0.1u
C22
0.1u
C20
0.1u
C23
0.1u
C30
0.1u
C32
10u
C14
C15
C16
C17
C18
C19
10u
R18
47k
R15
47k
R16
47k
R17
47k
R19
47k
R22
100
R25
100
R26
10k
R27
10k
R4
10k
R7
1k
R20
1k
R21
1k
R23
1k
R24
1k
PA4
PA5
QSPI-NCS
QSPI-IO1
QSPI-IO2
QSPI-IO3
QSPI-CLK
QSPI-IO0
LCD-SPI-MISO
LCD-SPI-CLK
LCD-SPI-MOSI
LCD-SD-CS
LCD-RST
LCD-CS
LCD-RS
LCD-WR
LCD-FLASH-CS
LCD-SD-CS
SDMMC-CMD
SDMMC-CK
SDMMC-D0
SDMMC-D1
SDMMC-D2
SDMMC-D3
DAT0(D0)
DAT1(RSV)
DAT2(RSV)
CDDAT3(CS)
CMD(DI)
CLK(SCLK)
VDD
VSS
CD
3V3
DIO
CLK
GND
SWCLK
PA14
PA13
O-SWCLK
O-SWDIO
+5V
LCD-DB0
LCD-DB1
LCD-DB2
LCD-DB3
LCD-DB4
LCD-DB5
LCD-DB6
LCD-DB7
LCD-DB8
LCD-DB9
LCD-DB10
LCD-DB11
LCD-DB12
LCD-DB13
LCD-DB14
LCD-DB15
LCD-SD-CS
LCD-DB4
LCD-DB5
LCD-DB6
LCD-DB7
LEDR
LEDG
LEDB
TITLE:
STM32H750开发板
REV: 1.0
Company: Your Company
Sheet: 1/1
Date: 2019-07-31
Drawn By: micespring
立创EDA