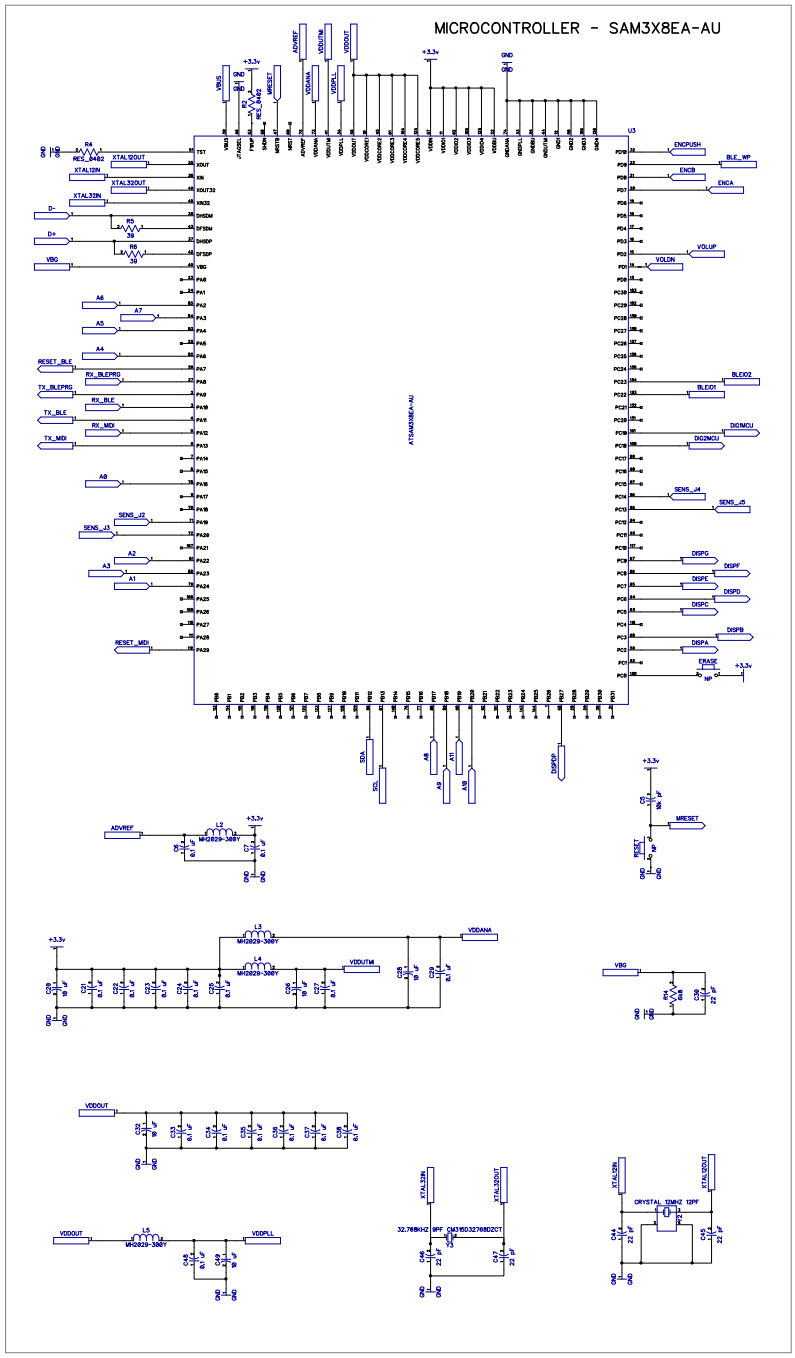

POWER & USB

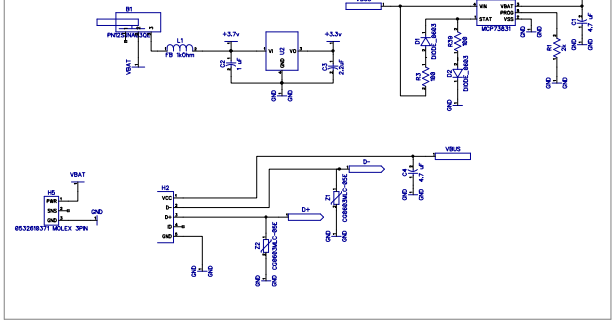

INTERFACE

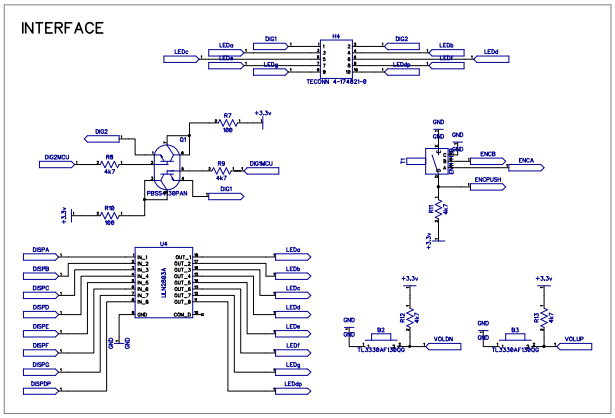

MIDI

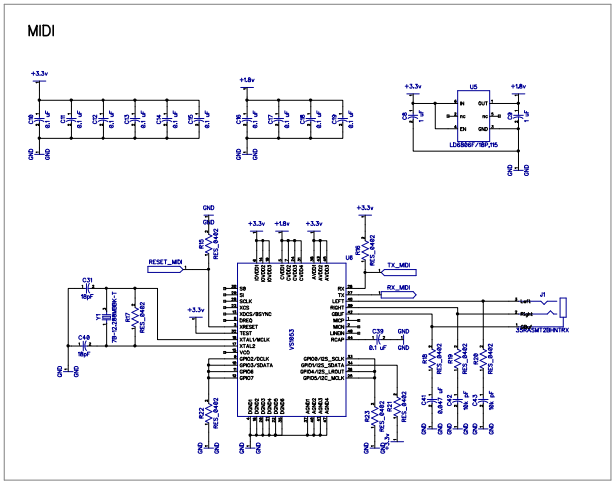

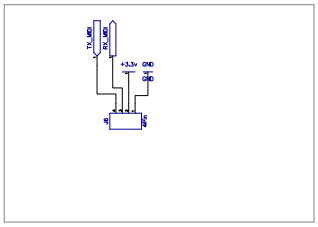

EEPROM

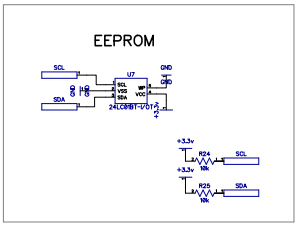

INSTRUMENT INPUTS

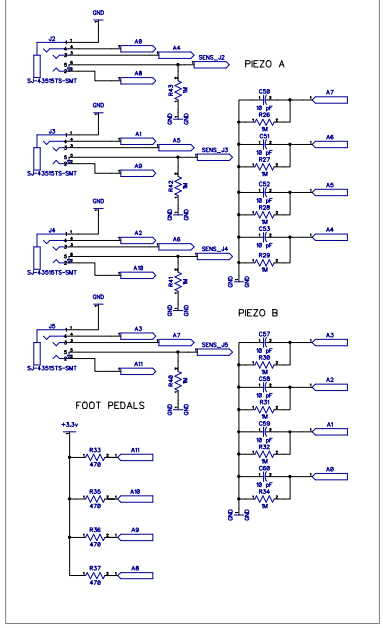

BLUETOOTH LOW ENERGY

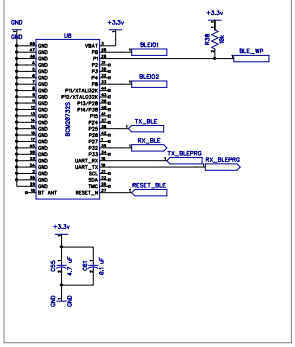

TEST AND MARKINGS

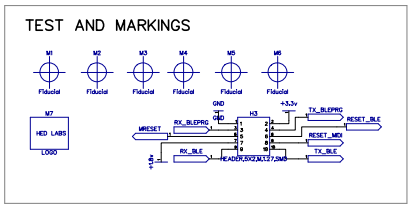

Title		
Drumpants Control Module		
Size	Number	Rev
A1		A2_2
Date: 2/21/2014	Drawn by: SJH	
Filename: Drumpants.dch	Sheet: 1 of 1	