Date:

EXPERIMENT NO. 2

AIM: Implement a circuit in Logisim which perform Addition and Subtraction of sign number.

ALGORITHM:

CIRCUITS:

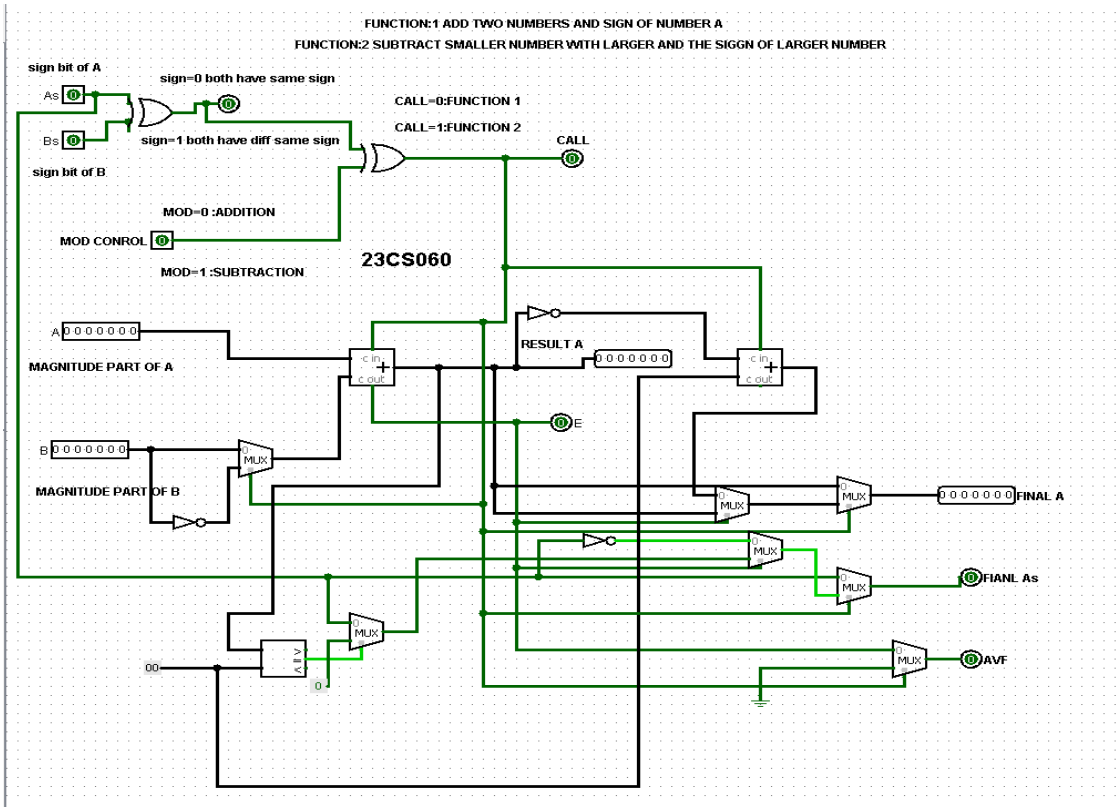

OUTPUTS

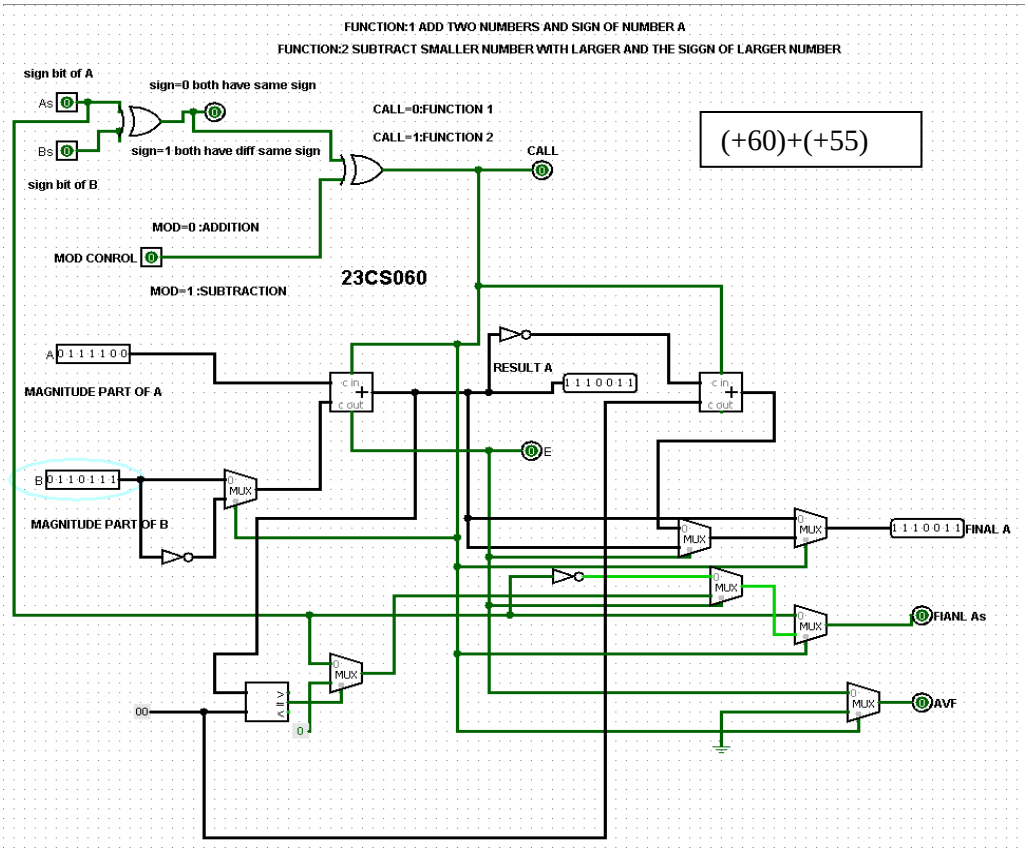

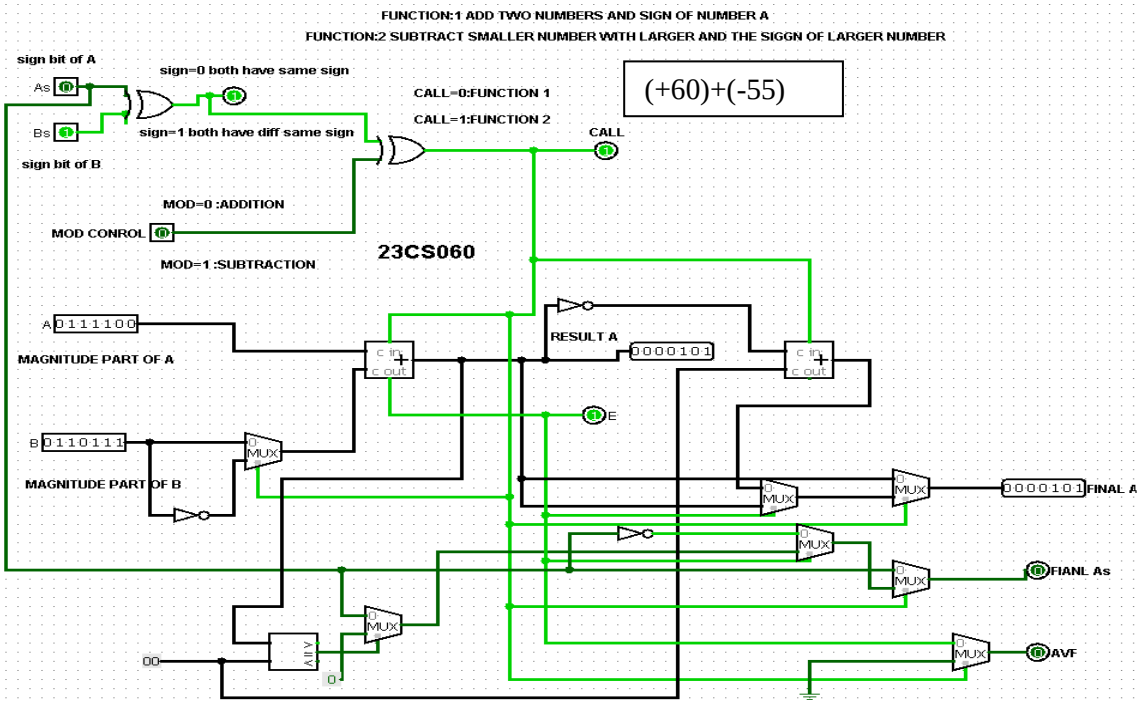
FUNCTION:1 ADD TWO NUMBERS AND SIGN OF NUMBER A
FUNCTION:2 SUBTRACT SMALLER NUMBER WITH LARGER AND THE SIGGN OF LARGER NUMBER
sign bit of A
sign=0 both have same sign
As
Bs
sign=1 both have diff same sign
sign bit of B
CALL=0:FUNCTION 1
CALL=1:FUNCTION 2
CALL
(+60)+(-55)
MOD=0 :ADDITION
MOD CONROL
MOD=1 :SUBTRACTION
23CS060
A 0111100
MAGNITUDE PART OF A
RESULT A
0000101
E
B 0110111
MAGNITUDE PART OF B
0000101 FINAL A
FIANL As
AVF
00

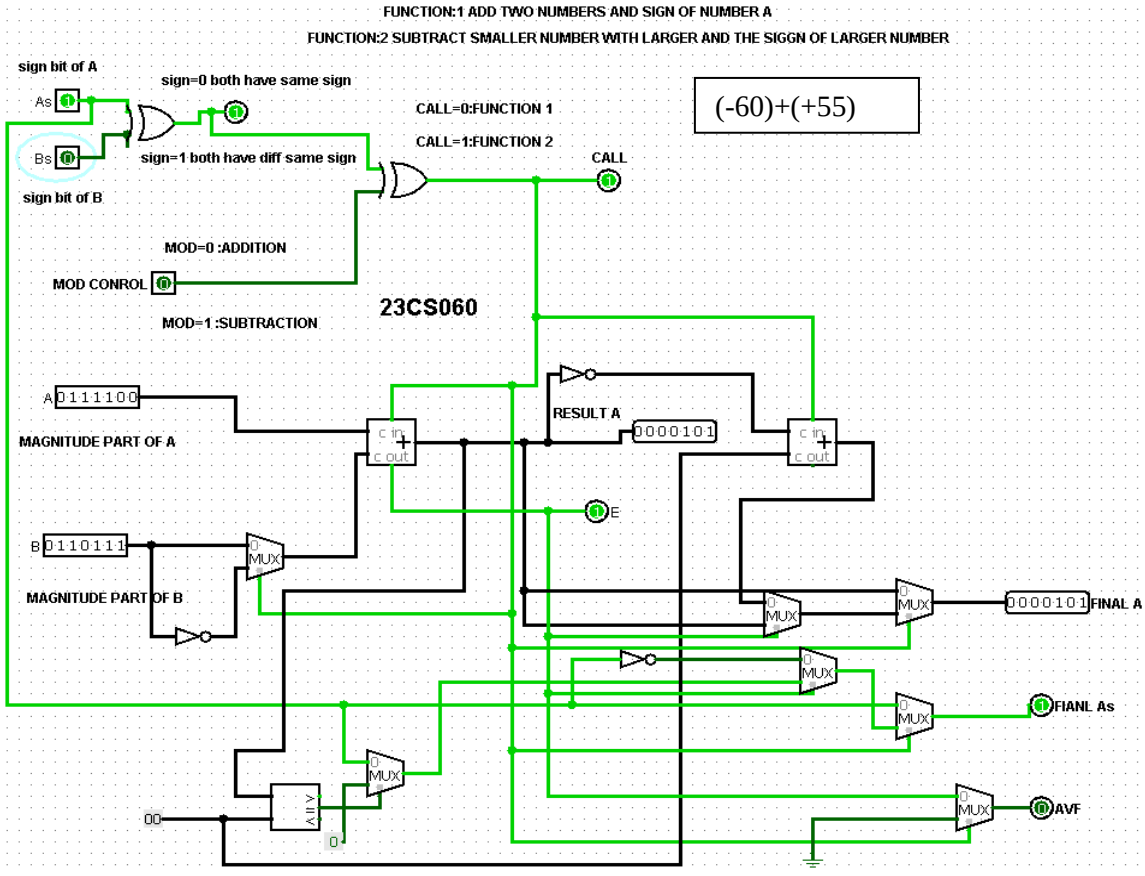
FUNCTION:1 ADD TWO NUMBERS AND SIGN OF NUMBER A
FUNCTION:2 SUBTRACT SMALLER NUMBER WITH LARGER AND THE SIGGN OF LARGER NUMBER
sign bit of A
sign=0 both have same sign
As
Bs
sign=1 both have diff same sign
sign bit of B
CALL=0:FUNCTION 1
CALL=1:FUNCTION 2
CALL
(-60)+(+55)
MOD=0 :ADDITION
MOD CONROL
MOD=1 :SUBTRACTION
23CS060
A 0111100
MAGNITUDE PART OF A
RESULT A
0000101
E
B 0110111
MAGNITUDE PART OF B
0000101 FINAL A
FIANL As
AVF
00

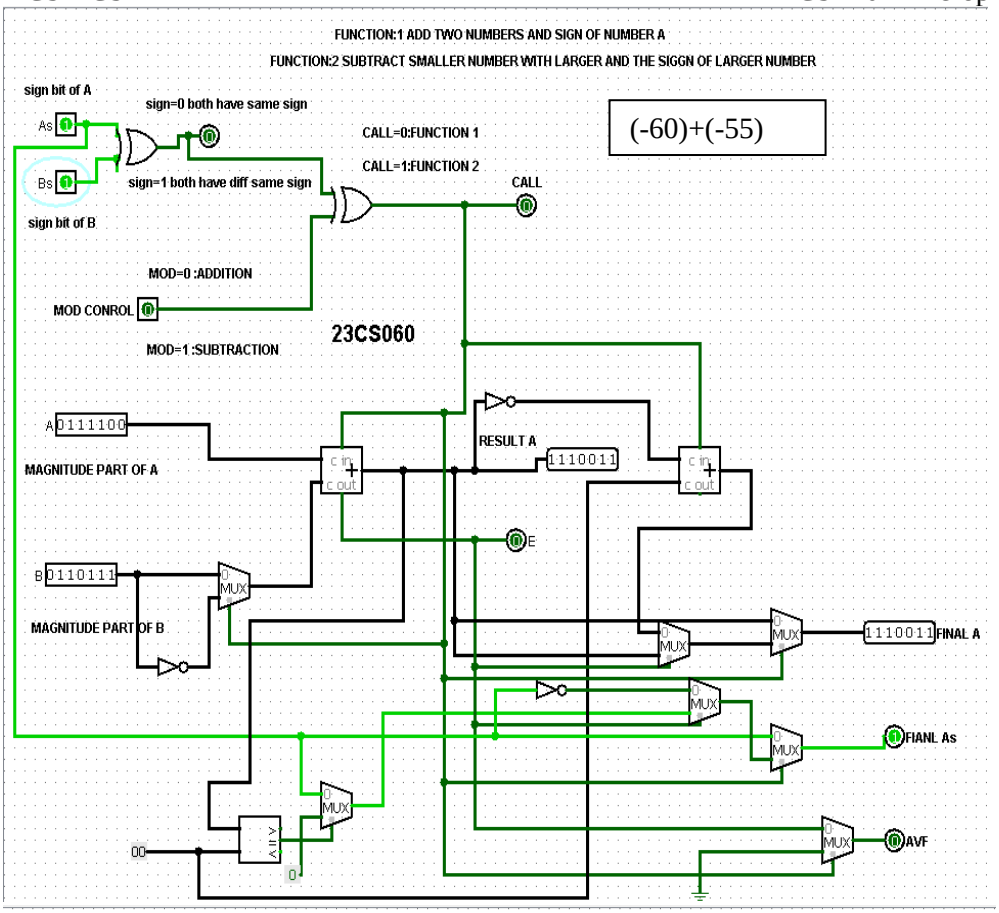
FUNCTION:1 ADD TWO NUMBERS AND SIGN OF NUMBER A
FUNCTION:2 SUBTRACT SMALLER NUMBER WITH LARGER AND THE SIGGN OF LARGER NUMBER
sign bit of A
sign=0 both have same sign
As
Bs
sign=1 both have diff same sign
sign bit of B
CALL=0:FUNCTION 1
CALL=1:FUNCTION 2
CALL
(-60)+(-55)
MOD=0 :ADDITION
MOD CONROL
MOD=1 :SUBTRACTION
23CS060
A 0111100
MAGNITUDE PART OF A
RESULT A
1110011
B 0110111
MAGNITUDE PART OF B
E
FINAL A
FIANL As
AVF
00
0

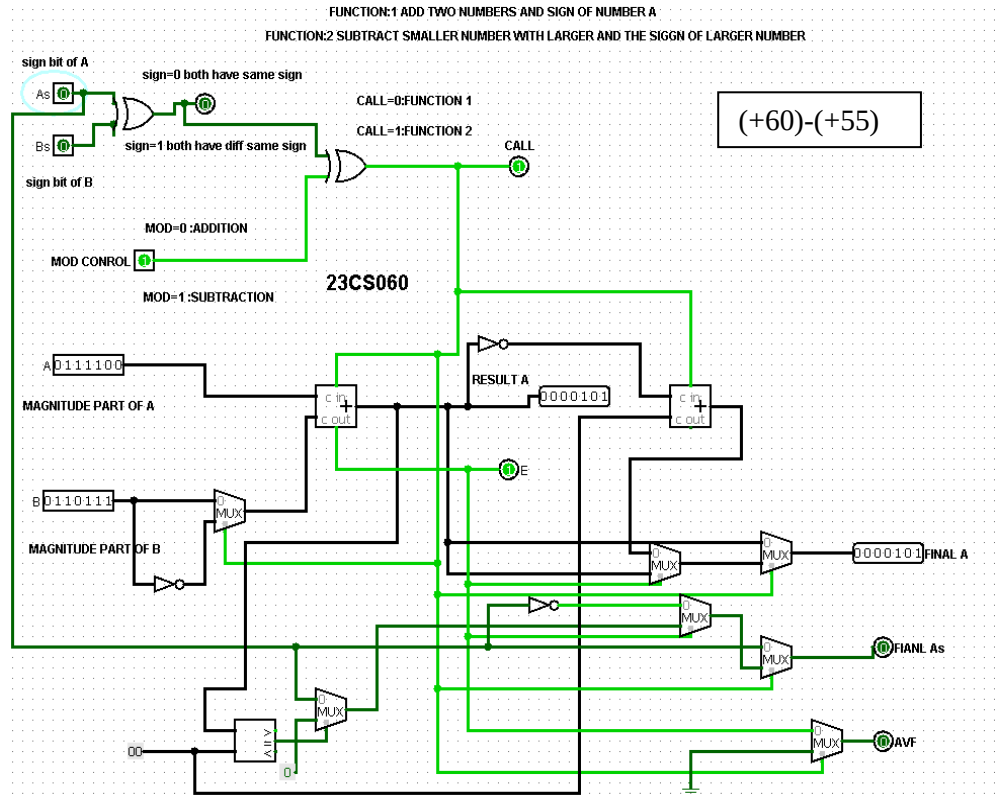
FUNCTION:1 ADD TWO NUMBERS AND SIGN OF NUMBER A
FUNCTION:2 SUBTRACT SMALLER NUMBER WITH LARGER AND THE SIGGN OF LARGER NUMBER
sign bit of A
sign=0 both have same sign
As
Bs
sign=1 both have diff same sign
sign bit of B
CALL=0:FUNCTION 1
CALL=1:FUNCTION 2
CALL
(+60)-(+55)
MOD=0 :ADDITION
MOD CONROL
MOD=1 :SUBTRACTION
23CS060
A 0111100
MAGNITUDE PART OF A
RESULT A
0000101
B 0110111
MAGNITUDE PART OF B
E
FINAL A
FIANL As
AVF
00
0

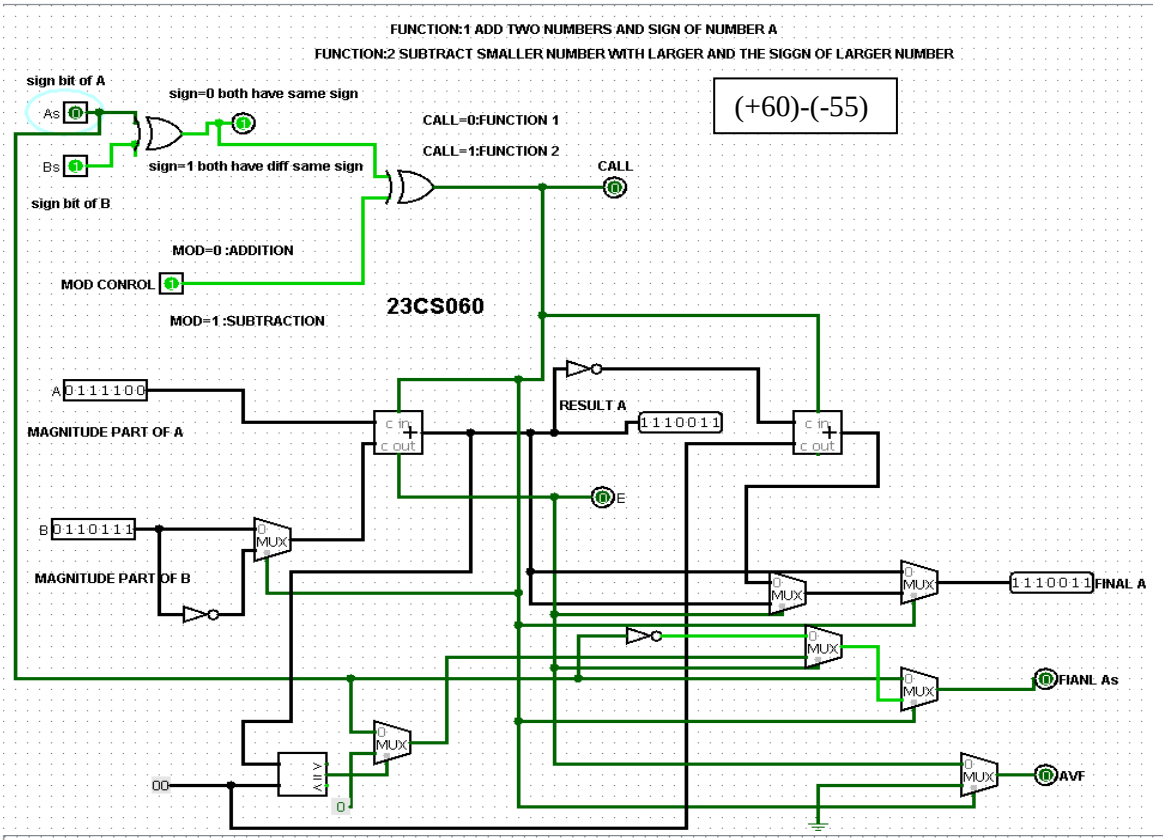
FUNCTION:1 ADD TWO NUMBERS AND SIGN OF NUMBER A
FUNCTION:2 SUBTRACT SMALLER NUMBER WITH LARGER AND THE SIGGN OF LARGER NUMBER
(+60)-(-55)
sign bit of A
As
sign=0 both have same sign
Bs
sign=1 both have diff same sign
sign bit of B
CALL=0:FUNCTION 1
CALL=1:FUNCTION 2
CALL
MOD=0 :ADDITION
MOD CONROL
MOD=1 :SUBTRACTION
23CS060
A 0111100
MAGNITUDE PART OF A
RESULT A
1110011
E
B 0110111
MAGNITUDE PART OF B
1110011 FINAL A
FIANL As
AVF
00
ALU

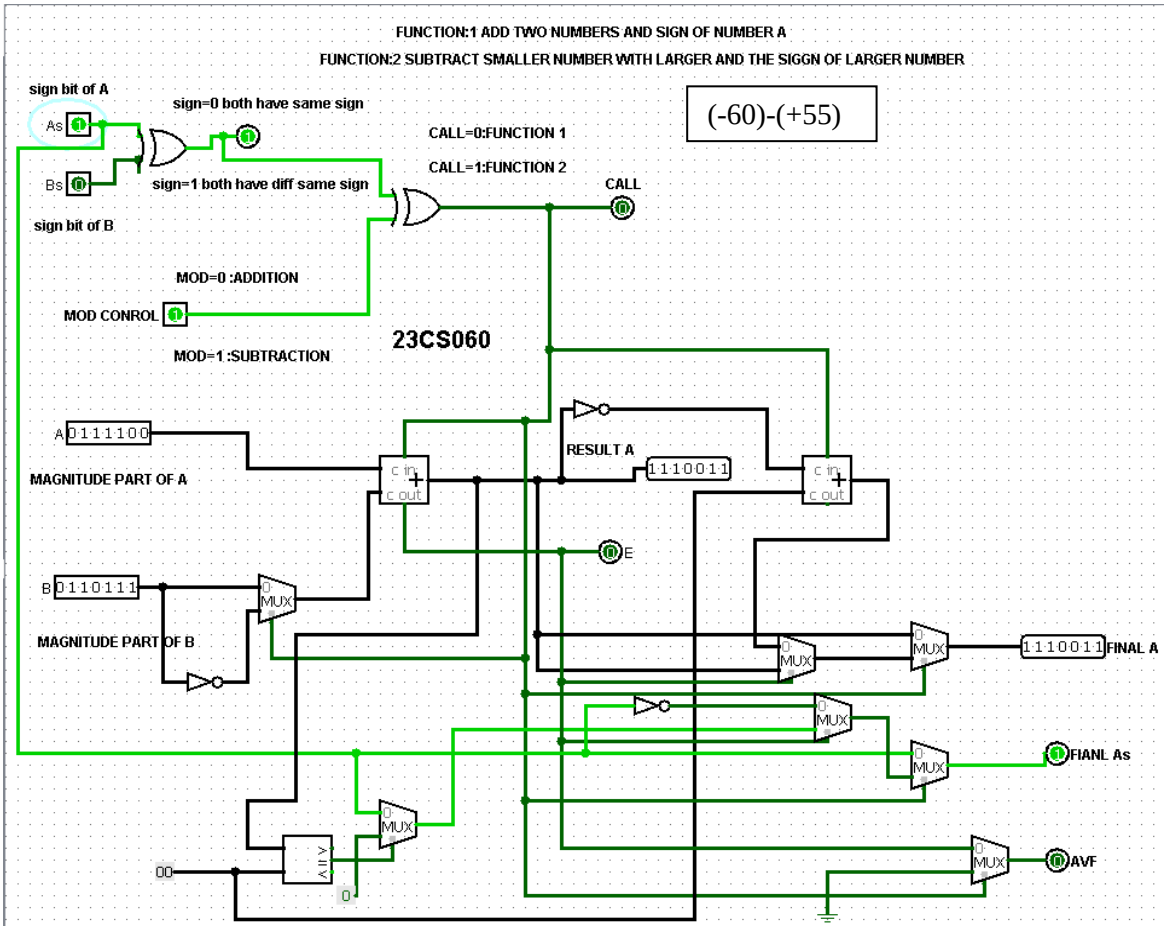
FUNCTION:1 ADD TWO NUMBERS AND SIGN OF NUMBER A
FUNCTION:2 SUBTRACT SMALLER NUMBER WITH LARGER AND THE SIGGN OF LARGER NUMBER
(-60)-(+55)
sign bit of A
As
sign=0 both have same sign
Bs
sign=1 both have diff same sign
sign bit of B
CALL=0:FUNCTION 1
CALL=1:FUNCTION 2
CALL
MOD=0 :ADDITION
MOD CONROL
MOD=1 :SUBTRACTION
23CS060
A 0111100
MAGNITUDE PART OF A
RESULT A
1110011
E
B 0110111
MAGNITUDE PART OF B
1110011 FINAL A
FIANL As
AVF
00
ALU

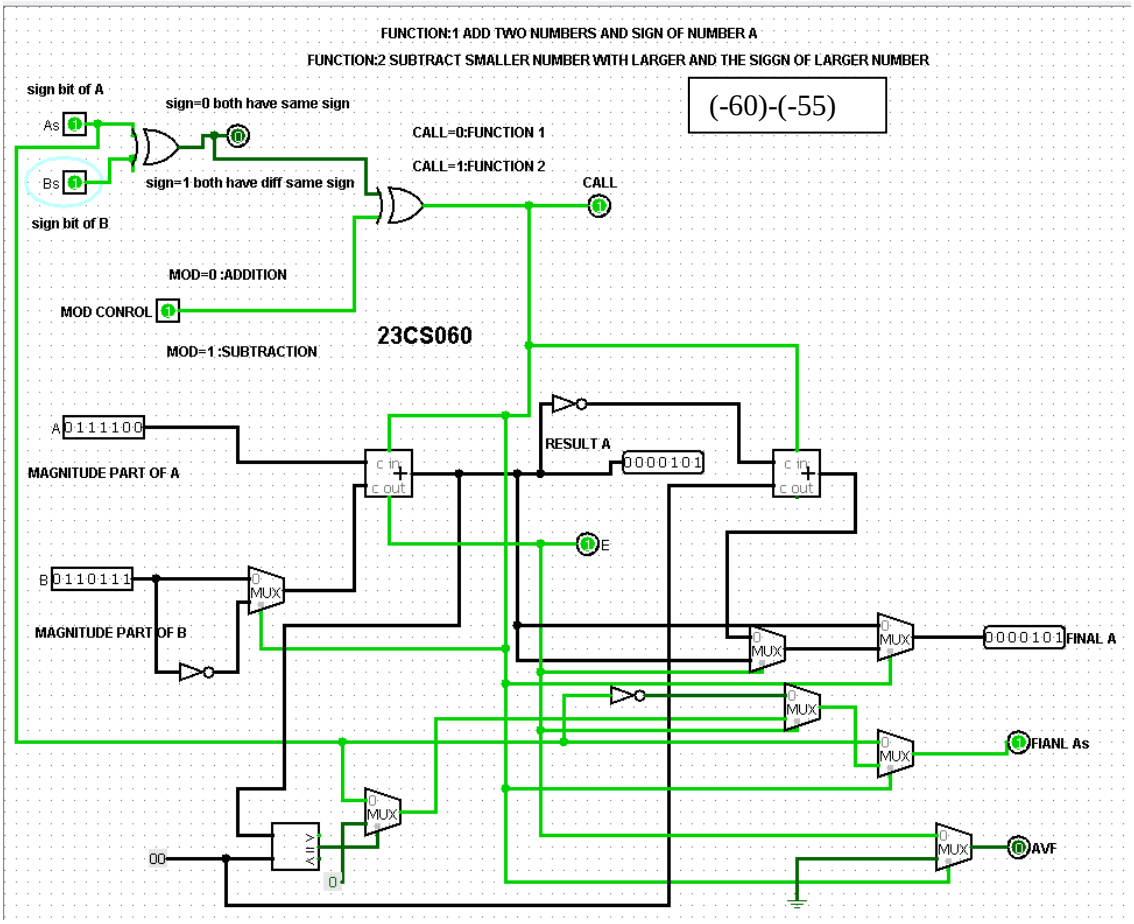
FUNCTION:1 ADD TWO NUMBERS AND SIGN OF NUMBER A
FUNCTION:2 SUBTRACT SMALLER NUMBER WITH LARGER AND THE SIGGN OF LARGER NUMBER
(-60)-(-55)
sign bit of A
As
sign=0 both have same sign
CALL=0:FUNCTION 1
CALL=1:FUNCTION 2
Bs
sign=1 both have diff same sign
CALL
sign bit of B
MOD=0 :ADDITION
MOD CONROL
23CS060
MOD=1 :SUBTRACTION
A 0111100
MAGNITUDE PART OF A
RESULT A
0000101
c in
c out
E
B 0110111
MAGNITUDE PART OF B
MUX
0000101 FINAL A
FIANL As
AVF
00
0

CONCLUSION: