Universidad de Costa Rica, 2023, 1–48

Universidad de Costa Rica
Facultad de Ingeniería
Escuela de Ingeniería Eléctrica

MANUAL

Implementación de un control de corriente y temperatura para sistemas láser con tecnología Hytek y sistemas embebidos de bajo costo

Gokeh Ávila Blanco, Dualok Fonseca Monge

El Manual del controlador de corriente para diodos láser de alta corriente Hytek Hy6340 proporciona una guía detallada para diseñar el circuito de configuración del controlador, implementando, además, una interfaz en Arduino que permita leer los valores programados de corriente y un diseño PCB.

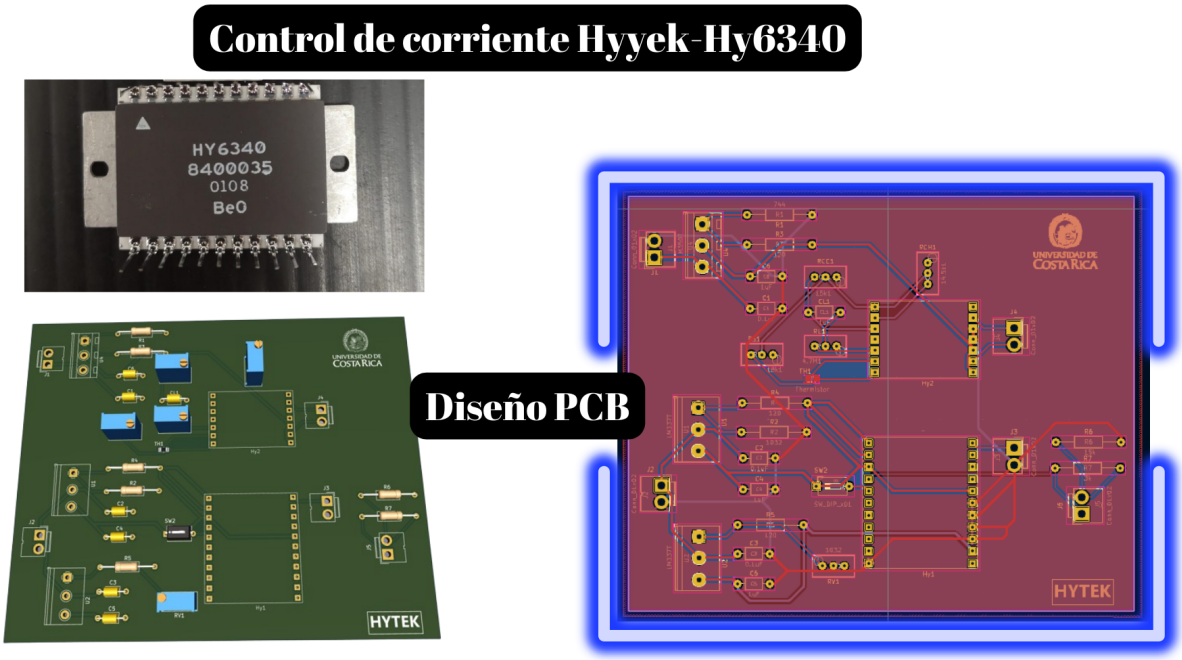

1. Controlador de corriente

1.1. Características técnicas y condiciones de operación

Para realizar el diseño del controlador de corriente Hytek6340, se debe tomar como referencia la hoja de datos del mismo. Teniendo presente las especificaciones de dicho dispositivo, las cuales se pueden encontrar en la tabla 1. Dicha información es de suma importancia a la hora de realizar el diseño del circuito.

Cuadro 1: Características técnicas y condiciones de operación Hy6340

Especificación	Pines	Tipo	Valor
Voltaje de alimentación negativa (V_{EE})	9, 10, 11, 16	Entrada	9V a 15V
Enable(EN)	7	Entrada	conectado V_{EE} (apagado), conectado a GND o abierto (encendido)
Tierra(GND)	18, 19, 20	Entrada	Voltaje de referencia común o tierra
Modulación(MOD)	21	Entrada	0.01A a 1A con V_{EE} +3 V (1.5A con aire acondicionado forzado)
Realimentación óptica (FB)	22	Entrada	Si FB es menor que MOD, incrementa Iout Si FB es mayor que MOD, decrementa Iout
Corriente del diodo láser (Iout)	12, 13, 14	Salida	0 a 1A (1.5 con aire acondicionado forzado)
Salida de referencia	8	Salida	V_{EE} +5V con una corriente menor que 100mA
Temperatura de operación	-	Condiciones de operación	−20°C to +100°C
Temperatura de almacenamiento	-	Condiciones de operación	−65°C to +150°C

1.2. Configuración del circuito de alimentación

De la tabla 1 se entiende que este controlador Hytek 6340 requiere de dos voltajes de entrada, el voltaje de alimentación negativo V_{EE} y la entrada de modulación para controlar la corriente del láser, V_{MOD}, los cuales se diseñan con dos reguladores de tensión del tipo LM337 y utilizando la técnica conocida multirailing. El circuito se alimenta con -15V y entonces con la ayuda de los reguladores de tensión se obtienen -9V fijos para la entrada V_{EE} y una tensión ajustable en el rango de [V_{EE}, V_{EE}+3V]. La configuración a utilizar en estos reguladores de tensión es la siguiente:

De la configuración del regulador de tensión negativa LM337, según la hoja del fabricante, la resistencia R1 es típicamente 120Ω, la resistencia R2 se debe ajustar por medio de un potenciómetro para obtener una tensión de salida adecuada. Por lo tanto, para obtener V_{EE}, se utiliza una resistencia fija R2 para obtener una tensión fija de -9V en V_{EE} y para la tensión de modulación se busca una resistencia variable que vaya desde -9V hasta -12V. Entonces:
Si $V_{MOD} = VEE = -9V$ fluye corriente 0 según la hoja del fabricante.
Si $|V_{MOD}| = |VEE + 3| = -12V$ fluye corriente máxima por el diodo láser, los signos de valor absoluto, si intuyen de forma empírica a través de las pruebas realizadas, ya que en la hoja del fabricante dice únicamente "Si $V_{MOD} = VEE + 3$, entonces la corriente es máxima".

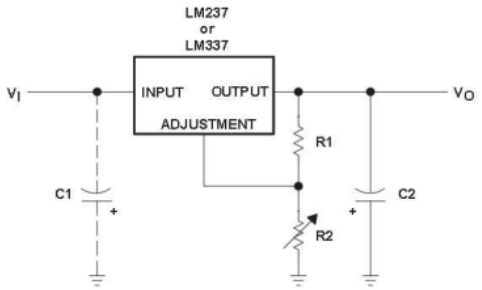

Figura 1: Configuración del regulador negativa LM337

Utilizando la fórmula 1, se pueden obtener los valores resistivos para estas entradas [V_{MOD} y V_{EE}]

$$R_2 = R_1\left(\frac{-V_{out}}{-Vref} - 1\right) \tag{1}$$

$$R_2 = 120\left(\frac{-12V}{-1.25} - 1\right) = 1032\Omega \tag{2}$$

Para la entrada MOD, se ocupa que el rango máximo de tensión vaya de [-12V,-9V].

$$R_2 = 120(\frac{-9V}{-1.25} - 1) = 744\Omega \tag{3}$$

Por lo tanto, el potenciómetro debe operar en el rango de $[744\Omega, 1032\Omega]$. Además, es importante notar que la tensión de alimentación debe ser al menos 1.25V mayor que las tensiones deseadas de salida, por esta razón se establecen -15V de entrada.

Queda a criterio del usuario probar el circuito de alimentación en algún simulador como lo es LTSpice, los resultados y la configuración para realizar dicha simulación en LTSpice pueden verse en las figuras de la imagen 4.

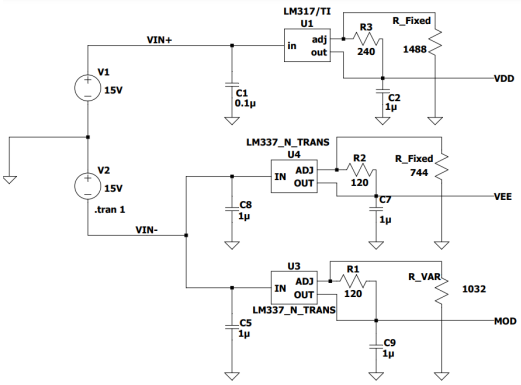

Figura 2: Configuración de alimentación del Hytek6340

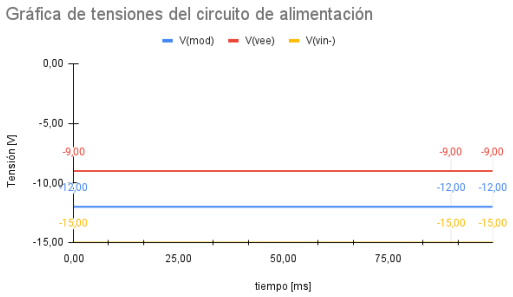

Figura 3: Resultados de simulación del circuito de alimentación Hytek6340

Figura 4: Circuito de Alimentación para el Hytek6340

1.3. Modelo del diodo láser

Para probar el correcto funcionamiento del circuito, se utiliza el modelo de carga de la figura 5

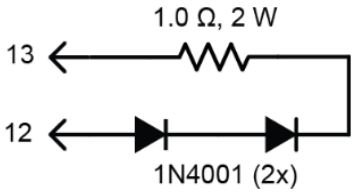

Figura 5: Modelo de carga para el diodo láser [1].

El modelo del diodo láser consta de dos diodos IN4001 y un resistor de 1Ω. Utilizar una carga de prueba verifica que el resto del equipo esté configurado correctamente y en funcionamiento antes de conectar el diodo láser, ya que un diodo láser suele ser más caro que los componentes del modelo y así evitar cualquier posible daño en el diodo láser. Los procesos de carga de prueba verifican la salida de corriente en el diodo láser en modo de corriente constante y se configuran y supervisan los límites. Además es importante observar que la carga va conectada entre cualquiera de los pines 12, 13 y 14; y tierra. Por lo tanto, la resistencia va conectada entre el ánodo del diodo y cualquier pin Iout del Hy6340, mientras que los diodos deben conectar el cátodo a tierra, debido a que en esta sección del circuito, la referencia a tierra es la mayor tensión. En las pruebas de laboratorio realizadas, se limitó la corriente a 0.3A y se midieron las variaciones de tensión en la resistencia.

1.4. Circuito esquemático de conexión completa

Luego para hacer la conexión física del controlador Hytek6340 se recomienda seguir la configuración que se ve en la figura 6.

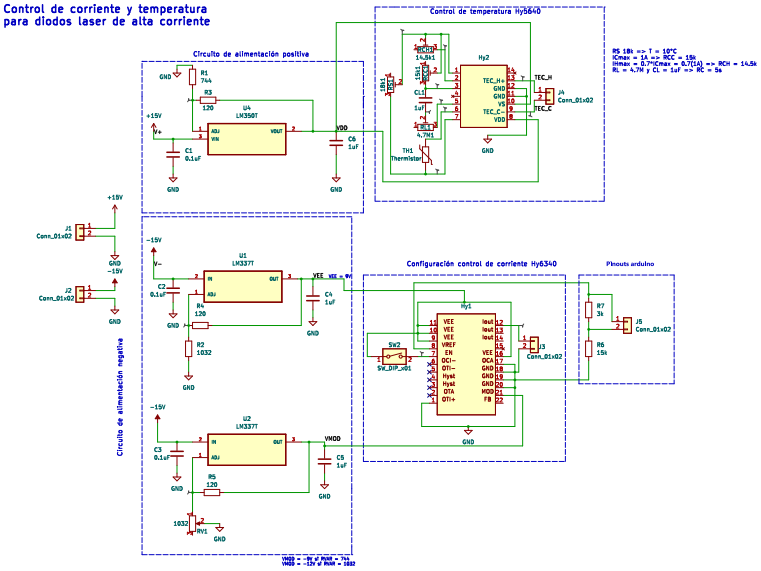

Figura 6: Esquemático completo del circuito.

Como segunda referencia se puede guiar con la configuración física realizada para este proyecto y que se puede observar en la figura 7.

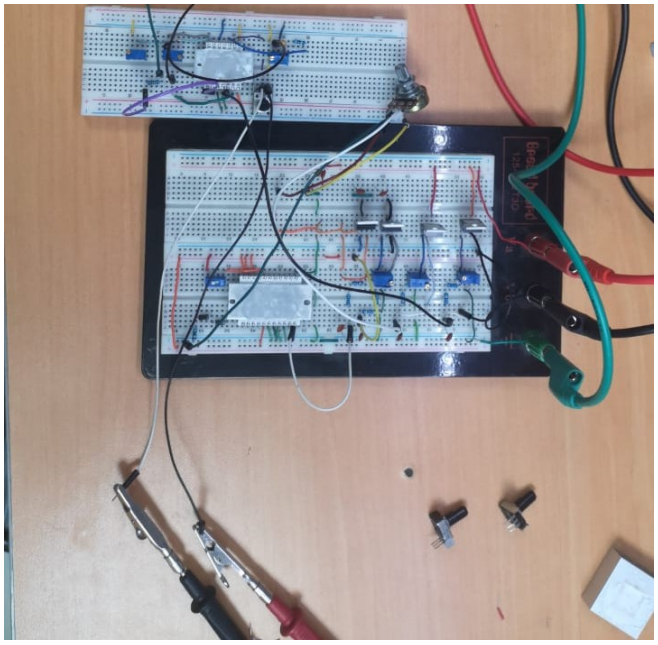

Figura 7: Implementación Completa del circuito.

2. Diseño de los sensores de corriente y temperatura en Arduino:

Para la replicación de estos sensores es importante tener en cuenta dos aspectos:

- Se está utilizando Arduino UNO.
- La simulación se realiza en el software llamado TinkerCAD.

2.1. Sensor de Temperatura:

Para el diseño del sensor de temperatura es importante tener presente la gráfica de variación del coeficiente de temperatura del termistor de 10k NTC(Coeficiente de temperatura negativo) por sus siglas en inglés que viene en la hoja de datos del Hytek5640, la cual se puede

observar en la figura 8.

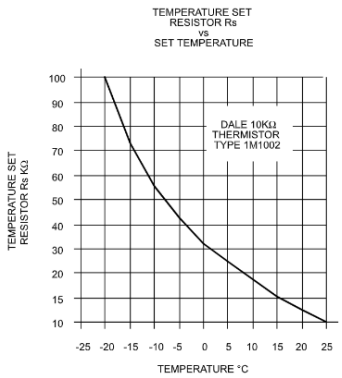

Figura 8: Gráfica de variación del coeficiente de temperatura del termistor de 10k.

Que el termistor sea de 10k significa que a temperatura ambiente, aproximadamente unos 25^oC, el valor resistivo del termistor es $10k\Omega$, se puede realizar una simulación en TinkerCAD, para esto se conecta una pantalla LCD y con el uso de un potenciómetro, se simula el comportamiento del termistor NTC de 10k.

La característica principal de los termistores NTC es que su resistencia eléctrica disminuye a medida que aumenta la temperatura. En otras palabras, la resistencia de un NTC termistor disminuye de manera no lineal a medida que la temperatura aumenta, como se puede apreciar en la gráfica 8

Cuando se menciona la çonstante de tiempo.en el contexto de un sensor NTC, se refiere al tiempo que lleva al sensor alcanzar el 63.2 % de su cambio total de temperatura en respuesta a un cambio brusco en la temperatura ambiente. Esta medida es útil para evaluar la capacidad del sensor para seguir y adaptarse a cambios rápidos en la temperatura.[2]

A partir de la gráfica de temperatura que provee el fabricante del Hy5640, la cual se puede ver en la figura 8, se obtienen los pares ordenados más visibles (T,R) para codificar métodos numéricos y obtener una ecuación que relacione la resistencia con la temperatura. Entre los métodos elegidos están:

- **Ecuación de Steinhart-hart**: Consiste en tomar 3 valores de resistencia del termistor y la temperatura medida

$$\frac{1}{T} = A + Bln(R) + C[ln(R)^3] \tag{4}$$

Para hallar los valores de A, B y C. Se requiere solucionar el sistema de ecuaciones 3x3

$$\begin{bmatrix} 1 & ln(R_1) & ln^3(R_1) \\ 1 & ln(R_2) & ln^3(R_2) \\ 1 & ln(R_3) & ln^3(R_3) \end{bmatrix} \cdot \begin{bmatrix} A \\ B \\ C \end{bmatrix} = \begin{bmatrix} \frac{1}{T_1} \\ \frac{1}{T_1} \\ \frac{1}{T_1} \end{bmatrix} \tag{5}$$

- **Ecuación del coeficiente beta**: Para utilizar la ecuación del parámetro beta, se requieren dos valores de resistencia del termistor y de temperatura medida

$$\frac{1}{T} = \frac{1}{T_0} + \frac{1}{\beta} ln(\frac{R_T}{R_0}) \tag{6}$$

Para calcular el parámetro beta, se usan los dos pares ordenador (T,R) y se resuelve para beta la ecuación

$$\beta = \frac{ln(\frac{R1}{R2})}{\frac{1}{T_1} - \frac{1}{T_2}} \tag{7}$$

Los datos utilizados fueron los siguientes

Cuadro 2: Datos obtenidos de resistencia y temperatura

Valores medidos	R k Ω	T C^o
R1 | T1	10	25
R2 | T2	25	5
R3 | T3	100	-20

Para agilizar el proceso, es posible calcular los parámetros para el termistor NTC 10k A, B, Cy β de ambos métodos, utilizando el software en linea https://www.thinksrs.com/downloads/programs/therm%20calc/ntccalibrator/ntccalculator.html

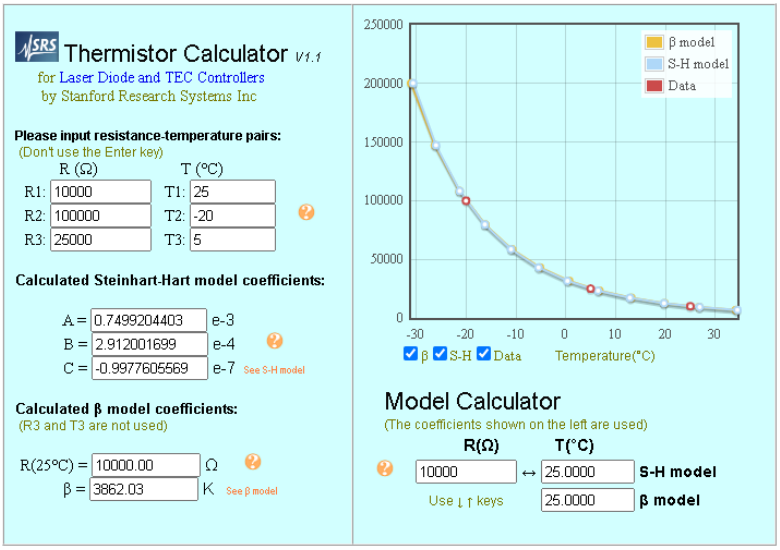

Figura 9: Cálculo de los parámetros de ambos modelos

Luego, con estos valores, se decide utilizar la ecuación del parámetro beta en el código para convertir la resistencia medida en el potenciómetro a temperatura. Se logró modelar correctamente el comportamiento del termistor de 10k como se muestra en la siguiente figura, donde se modela mediante un potenciómetro, la variación de resistencia del termistor y se muestra la temperatura respectiva.

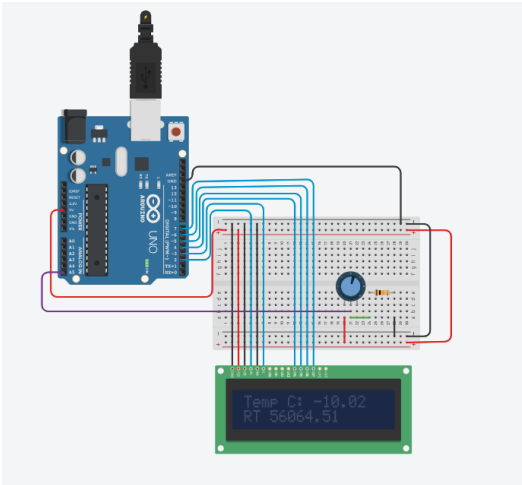

Figura 10: Medición 1

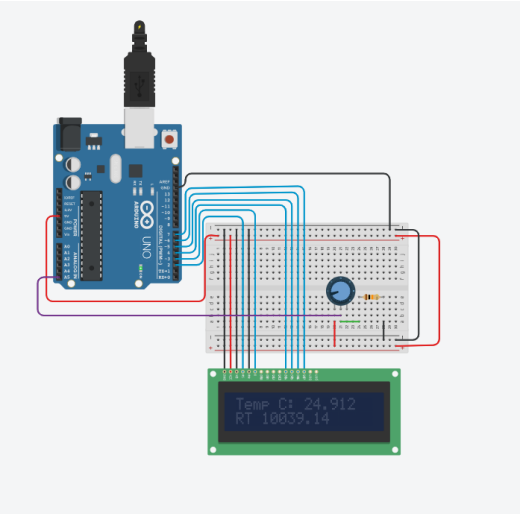

Figura 11: Medición 2

Figura 12: Simulación de sensor de temperatura Arduino

2.2. Sensor de Corriente:

Para el diseño del sensor de corriente es recomendable crear una gráfica de Iout[A] vs Vref[V] como la que se muestra en la figura 34. Los valores de dicha gráfica fueron obtenidos de manera experimental en el laboratorio al probar el funcionamiento del controlador Hytek6340.

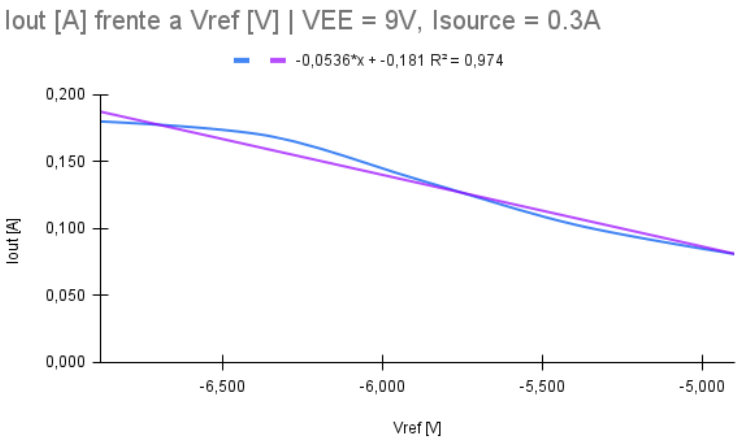

Figura 13: Gráfica Iout vs Vref

Luego, para realizar el sensor de corriente en TinkerCAD para el Hy6340, se puede utilizar el pín 8 del controlador, llamado Vref, esta salida se relaciona directamente con la corriente de salida Iout, entonces queda sencillo leer Vref en el arduino y realizar la conversión internamente con código de Vref a Iout. En TinkerCAD, se agrega una fuente de tensión para simular la tensión de salida Vref y un divisor de tensión, ya que el Arduino recibe tensiones de 5V como máximo. Se utiliza una resistencia de 15kΩ y otra de 3kΩ para reducir la tensión de entrada en factor de 1/6.

$$V_{medida} = V_{in}\left(\frac{3k}{3k + 15k}\right) = V_{in}\frac{1}{6} \tag{8}$$

Luego, dentro del código, simplemente se multiplica la tensión medida en un factor de 6 y se obtiene la lectura deseada. Con este valor, se procede a calcular la corriente de salida del diodo láser con la ecuación obtenida de 34.

$$I_{out} = -0.0536 * (V_{ref}) - 0.181 \tag{9}$$

Así se logra realizar mediciones coherentes aunque no tan precisas en algunos puntos, como se puede ver en la imagen 34.

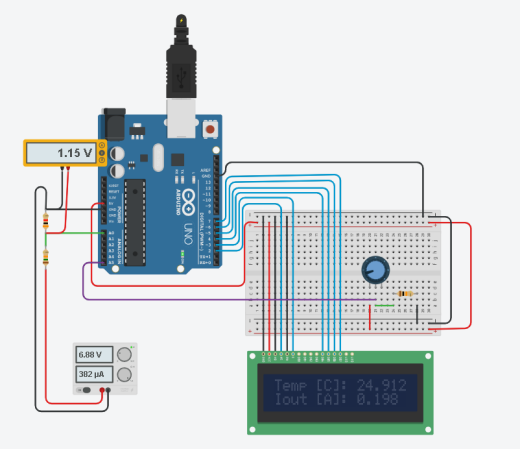

Figura 14: Medición 1

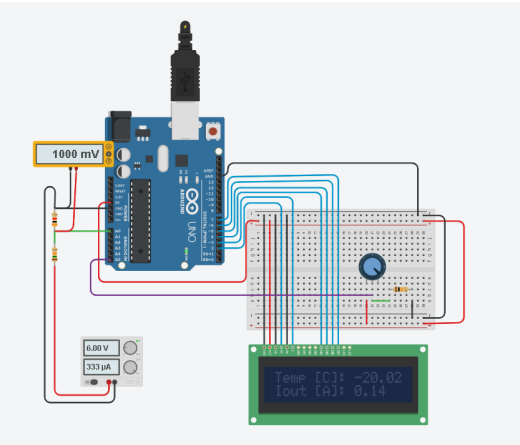

Figura 15: Medición 2

Figura 16: Simulación de sensor de corriente y temperatura en Arduino

3. Diseño del PCB

En caso de que se quiera replicar el diseño del PCB se deben tomar en cuenta varios aspectos, entre ellos:

- Seleccion de los footprints adecuados según los componentes utilizados.
- El placement de los componentes en la placa.
- El diseño de los footprint para los componentes que no estén incluidos en alguna librería de KiCad.

- Y por último el routing.

A continuación se pueden observar los pasos que se llevaron a cabo para diseñar la placa de PCB para este proyecto:

3.1. Selección de footprints para los componentes:

Una vez se tenga el diseño completo del circuito, en KiCad se hace click sobre la herramienta llamada "Footprint assignment tool", mostrada en la siguiente imagen:

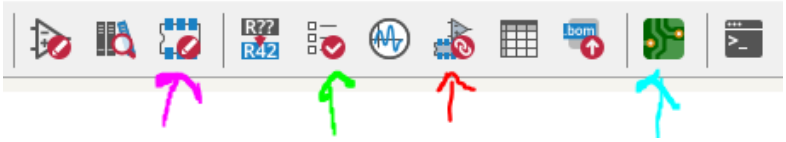

Figura 17: Footprint assignment tool

Una vez se ingresa en dicha herramienta, lo que se debe hacer es seleccionar los elementos deseados, donde los footprints seleccionados deben calzar con los footprints de los elementos físicos. KiCad cuenta con tres tipos de filtros: por tipo de elemento, por número de pines y por librería, también cuenta con una herramienta que nos muestra como se ve el footprint seleccionado, dichas herramientas se pueden ver en la siguiente imagen 20:

Figura 18: Filtros

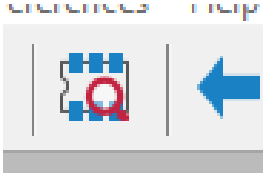

Figura 19: Visor Footprints

Figura 20: Filtros y Visor para seleccionar Footprints

Una vez se hayan seleccionado todos los footprints para todos los elementos se debe presionar el botón que dice .Apply, Save Schematic & Continuez luego en .ok".

3.2. Placement de los componentes en la placa:

Una vez hecho lo anterior, se vuelve al "Schematic Editorz se selecciona la herramienta llamada "PCB in board editor", herramienta que podemos ver marcada en color .Aqua.en la imagen de la figura 17. Una vez se está dentro de esta herramienta para poder cargar los footprints en el "PCB editor", se presiona el botón llamado Üpdate PCB with changes made to schematic", el cual esta marcado con el número 3 en la imagen de la figura 21.

Figura 21: Herramientas PCB editor

Luego de esto lo que se debe hacer es acomodar los componentes de manera lógica según a como estén acomodados en el esquemático del circuito.

3.3. Diseño de los componentes que no están en ninguna librería de KiCad:

En el caso de este proyecto fue necesario crear los footprints de los Hytek, e importar unos footprints para los reguladores de tensión LM350 y LM337 ya que estos no estaban en ninguna de las librerías de KiCad. En el caso de los controladores Hytek, es necesario basarse en las hojas de datos del fabricante para poder tomar bien las dimensiones de los pines, para esto nos basamos en las siguientes dimensiones:

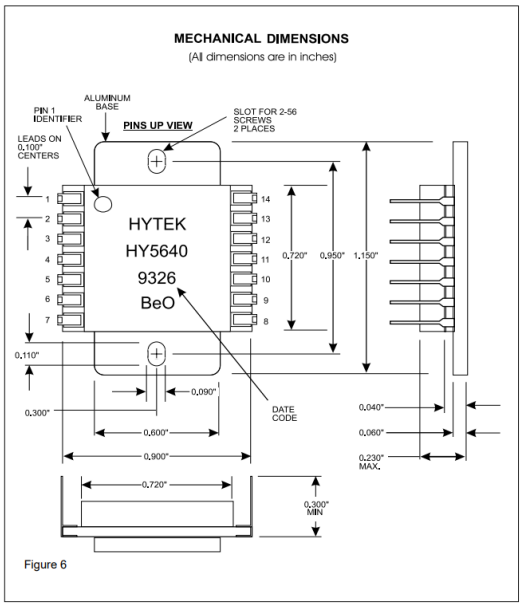

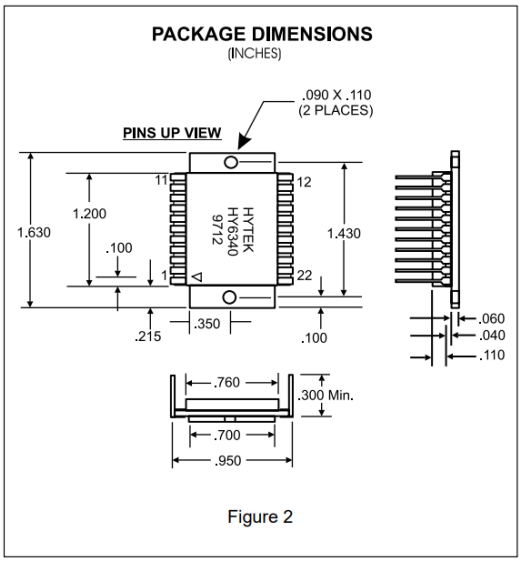

Figura 22: Dimensiones Hytek5640

Figura 23: Dimensiones Hytek6340

Figura 24: Dimensiones físicas de los controladores

Una vez entendido esto, en la herramienta de "PCB editor", en la barra de herramientas de la figura 21, utilizamos la herramienta marcada con el número 1, la cual sirve para crear, editar o eliminar footprints. Una vez dentro de esta herramienta lo que se debe hacer es una nueva librería siguiendo los siguientes pasos:

- File
- New library
- Se selecciona Project
- Se le da un nombre significativo a la librería (En nuestro caso Hytek_Controllers)

Luego se debe seleccionar esta librería y crear el nuevo footprint presionando el siguiente botón:

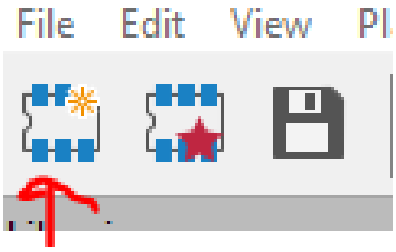

Figura 25: Crear un nuevo Footprint

Para editar o crear el footprint del elemento se utiliza la barra de herramientas mostrada a la derecha de la pantalla, dicha barra se puede ver en la figura de la imagen 26, donde los pads del componente se agregan con el botón marcado con el número 1 y la forma del componente con el botón marcado con el número 2.

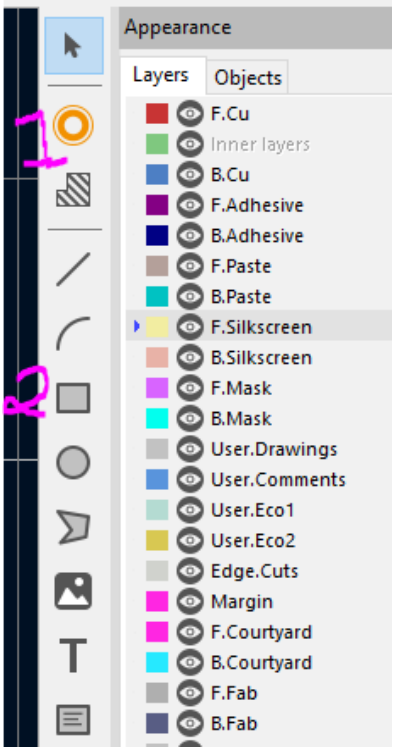

Figura 26: Barra de herramientas creador de footprint

El tipo de pads que se utilizaron son del tipo "Through-hole", y la configuración utilizada de los mismos es la siguiente:

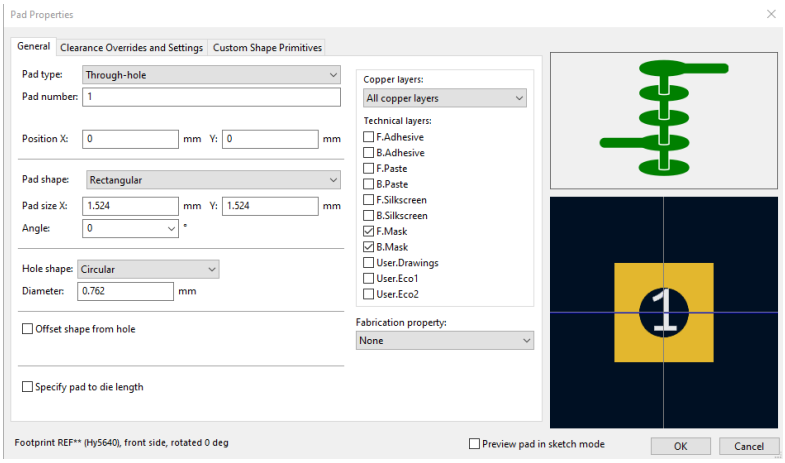

Figura 27: Configuracion de los pads

Para concluir con el diseño del footprint se deben seguir los siguientes pasos:

- Guardar los cambios.
- volver al PCB editor, e ir a "Preferences"
- Ir a la pestaña llamada "Project Specific Librariesz seleccionar el footprint creado.
- Luego seleccionar el elemento que se quiere actualizar con el nuevo footprint creado, dar click derecho sobre él, y seleccionar la opción que dice Çhange footprint".
- Lo anterior abre una pestaña y es solo de cersiorarse que en la pestaña llamada "New footprint library id.estemos seleccionando la libreria y el componente creado por nosotros.
- presionar el botón de Çhange".

Para importar un footprint de un elemento se siguen los siguientes pasos:

- Se busca y descarga el elemento en Snapeda.com

- En el PCB Editor se va a la pestaña llamada: Preferences, luego Manage Footprint Libraries.
- Luego nos paramos en la pestaña de Project Specific Libraries, y vamos al ícono del folder que está en la esquina inferior izquierda y ahí se navega al folder donde esté el archivo descargado.
- Por último, se sigue un proceso análogo al que se hizo realizó para actualizar el footprint de un componente creado por uno, se da click derecho sobre el componente y se acutaliza el footprint.

3.4. Routing:

Por último, para concluir con el diseño del PCB lo que se debe realizar es el routing de los componentes. Dicho proceso se hace con ayuda de la barra de herramientas que se muestra en la figura 28,

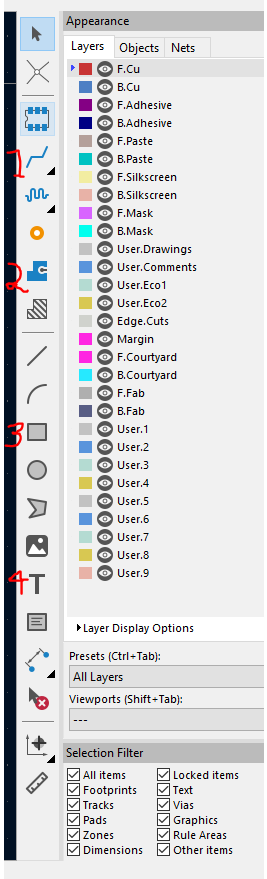

Figura 28: Layer y otras herramientas

La forma de la tarjeta se hace en la capa llamada "F.Silkscreenz la herramienta marcada con el número 3 en la figura 28, luego de esto el routing se hace con la herramienta marcada con el número 1 en la figura 28 y utilizando las capas llamada "F.Cuz "B.Cu". Para hacer los Cooper fills y evitar los abiertos y corto circuitos, se utiliza la herramienta marcada con el número 2 en la figura 28 con las siguientes configuraciones:

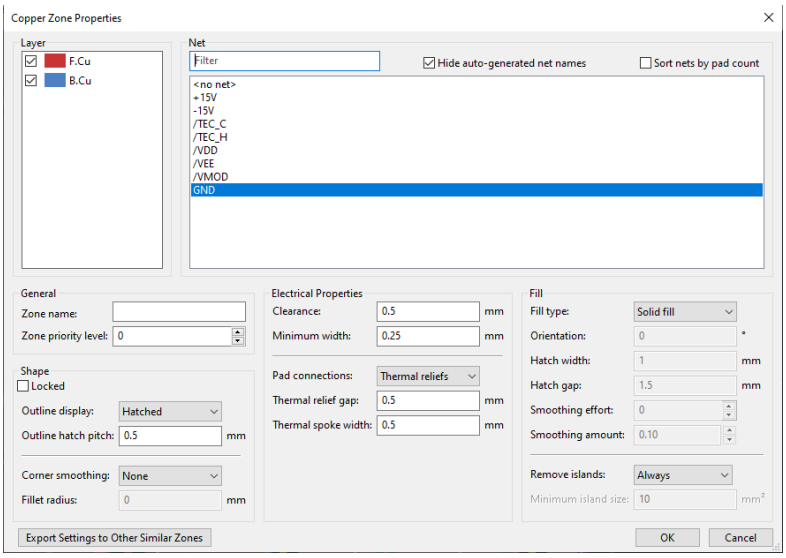

Figura 29: Cooper Zone Properties

Luego de seguir los pasos anteriores lo último que quedaría por hacer es correr el DRC para verificar que el PCB no tenga ningun tipo de errores, el DRC se corre presionando el botón marcado con el número 4 en al figura 21 y luego estripando el botón que dice Run DRC". El resultado del DRC en el caso de este proyecto se ve asi:

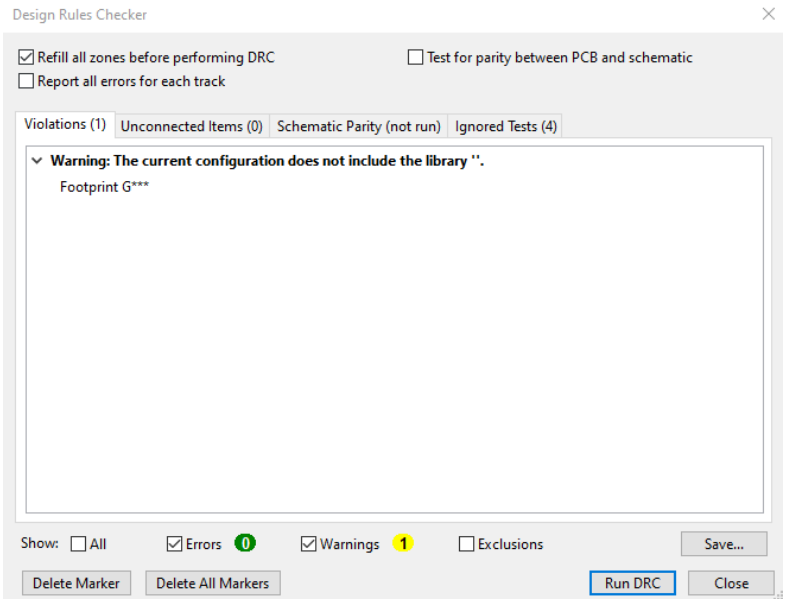

Figura 30: Resultado DRC

Siguiendo los paso anteriores es posible diseñar un PCB como el realizado para este proyecto como el que se ve a continuación:

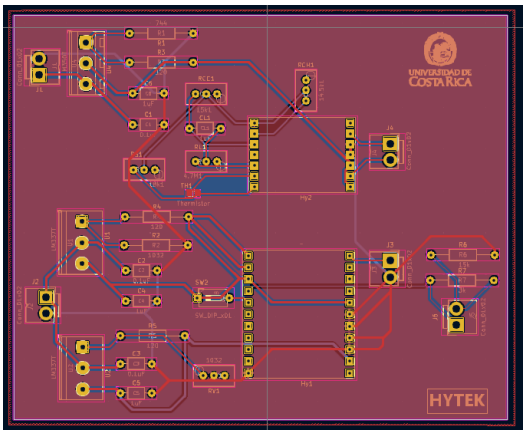

Figura 31: Routing del PCB completo

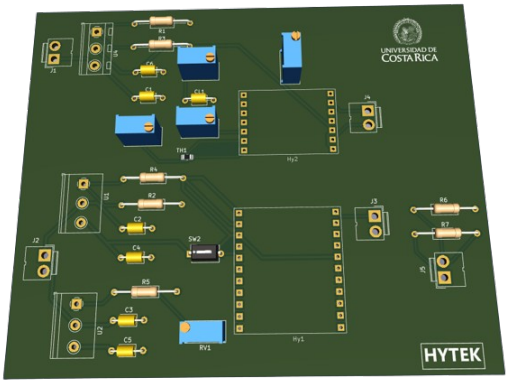

Figura 32: PCB 3D

Figura 33: Resultado final del PCB

Referencias

1. Wavelength Electronics. TEST LOAD BASICS; 2022, https://www.teamwavelength.com/test-load-basics/.
2. BCCOMPONENTS V, NTC Thermistors; 2021. https://www.vishay.com/docs/29053/ntcappnote.pdf. Hoja de Datos.

Anexos

Enlace a la carpeta del proyecto

Link: https://github.com/Dualock/Controlador-de-corriente-y-temperatura-Hytek

Figura 34: GitHub QR

www.DataSheet4U.com

HY6340
Laser Diode Driver

Switchable Constant Current Laser Diode Driver

The HY6340 Laser Diode Driver is designed for applications requiring high constant current drive for the operation of laser diodes such as pump sources for EDFA's and diode pumped semiconductors. The HY6340 provides selectable drive current from zero to 1 ampere (1.5 amperes with forced air cooling). The HY5640 includes outputs for monitoring and control of over-current and laser diode over-temperature conditions. The HY6340 comes in a 22 pin dual in-line ceramic package. An aluminum heat spreader is included as a part of the package for heat sinking the device.

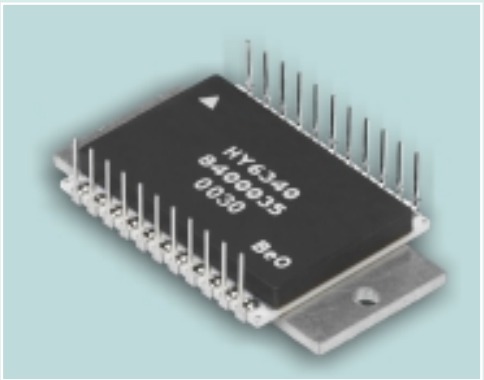

Features:

- Analog input, DC to 1MHz
- Adjustable modulation current to 1.5 amps
- Patented "backmatched" thermal management
- Enable pin for switching
- Overtemp and over-current alarms
- Common anode isolated laser diodes
- Thru-hole or surface-mount packaging

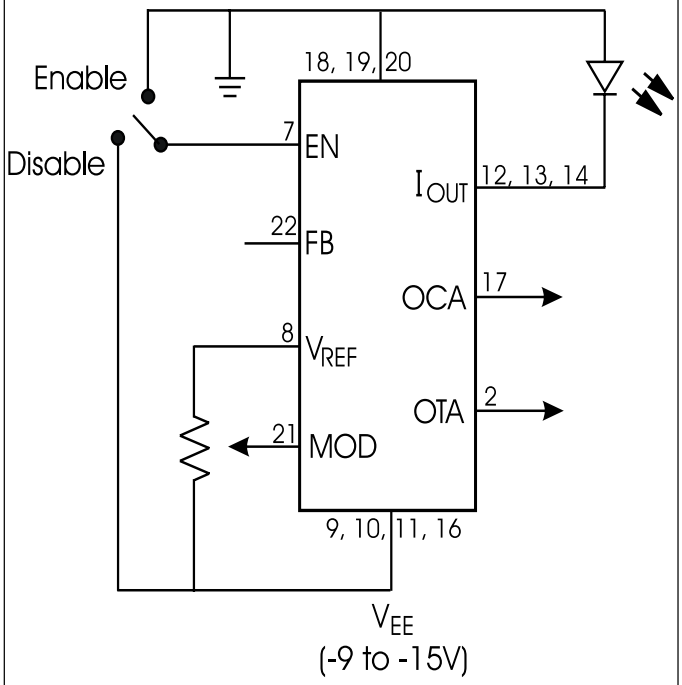

Figure 1

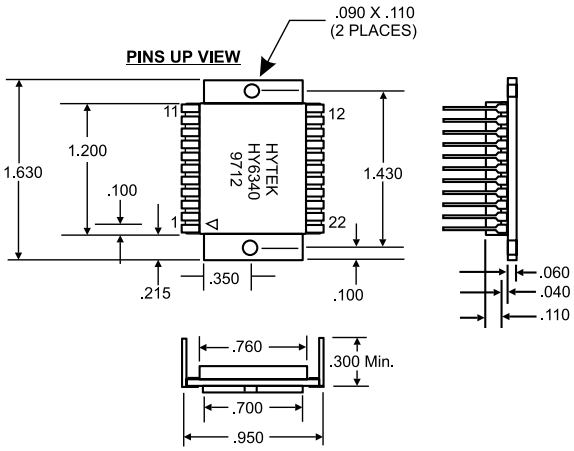

Figure 2

TEC Controllers
Laser Diode Drivers
Micro-heaters

Input Specifications

Power Supply Input (V_{EE}): **Pins 9,10, 11, 16**	–9 to –15V @ 1 amp max. (1.5 amp with forced air cooling)
Drive Enable (EN): **Pin 7**	V_{EE} (off, disable), Ground or Open (on, enable)
Modulation (MOD): **Pin 21**	10 to 1000mA for input voltage V_{EE} to (V_{EE} + 3V)
	(10 to 1500mA with forced air cooling)
Ground (GND): **Pins 18, 19, 20**	Power supply ground
Feedback-Optical (FB): **Pin 22**	FB<MOD increases I_{OUT}, FB>MOD decreases I_{OUT}
	V_{EE} < FB < V_{EE} + 5V
Over-Temperature Alarm Input (OTI+): **Pin 1**	with V_{EE} < OTI+ < V_{EE} + 5V
Over-Temperature Alarm Input (OTI-): **Pin 5**	with V_{EE} < OTI+ < V_{EE} + 5V
Over-Current Alarm Input (OCI-): **Pin 6**	
Temperature Alarm Hysteresis: **Pin 4**	Use to increase temperature hysteresis
Temperature Alarm Hysteresis: **Pin 3**	Use to increase temperature hysteresis

Output specifications

Laser Diode Current Drive (I_{OUT}): **Pins 12, 13, 14**	0 to 1 amp (1.5 amp with forced air cooling)
Reference Output (V_{REF}): **Pin 8**	= V_{EE} +5V at < 100mA
Over-Temperature Alarm Output (OTA): **Pin 2**	V_{EE} (Alarm condition; normally grounded)
Over-Current Alarm Output (OCA): **Pin 17**	V_{EE} (Alarm condition; normally grounded)

Environmental conditions

Operating Temperature	–20°C to +100°C (case)
Storage Temperature	–65°C to +150°C (case)

Signal descriptions

V_{EE} Input power supply (–9 to –15 VDC).

GND Ground return for V_{EE} (input power supply)

MOD The modulation voltage programs the laser diode drive current, I_{OUT}. When the input is at V_{EE} the modulation current is zero. Maximum modulation current occurs when the voltage at MOD is +5.0 V with respect to the V_{EE} input. The current is set by the voltage at the modulation input.

V_{REF} The Reference voltage is a precision voltage reference with an output voltage of V_{EE} + 5V_{DC}. The Reference voltage supplies a voltage for the adjustment of the current. It can also be used to power a resistive bridge input to the over-temperature alarm, and to provide an adjustable reference voltage to the current alarm input.

EN The Enable pin is used to enable/disable the output. When the Enable pin is connected to ground, or left open, the output is enabled, allowing current to flow to the laser diode. When this pin is connected to V_{EE} the laser current is disabled.

I_{OUT} The Output provides drive current to the laser diode (cathode/negative; connect anode to ground).

FB This high input impedance, voltage feedback, input is used with a photodetector to control Output Current.

OTI+ Positive over-temperature alarm input.

OTI– Negative over-temperature alarm input.

OCA Over-current alarm output. Alarm: V_{EE}; No alarm: Ground

OCI Over-current input. OCI controls the set point for the over-current alarm detector. V_{EE}<V_{OCI}< V_{EE} +5V

OTA Over-temperature alarm output. Alarm: V_{EE}; No alarm: Ground

R_H Resistor connected between pins 3 and 4 to vary the temperature detector hysteresis from 1 to 10%.

Subminiature Controller for Thermoelectric Coolers

The HY5640 is a subminiature temperature controller for thermoelectric coolers (TEC). This device is intended for "heat or cool" fixed temperature applications where front panel controls and digital readouts are not required. The HY5640 uses a thermistor bridge to precisely measure and regulate the temperature of a device affixed to a TEC. With proper heat sinking, the power stage of this device will deliver up to +/- 2 Amperes of current to a TEC. This controller was designed for single power suppply operation down to +5V. In addition, the device can be operated with dual supplies where V_S can be as low as +3V and V_{DD} as low as +5V.

Maximum ratings:

Rating	Symbol	Value	Unit
Supply Voltage 1 (Voltage on Pin 8)	V_{DD}	+20	Volts DC
Supply Voltage 2 (Voltage on Pin 10)	V_S	+12	Volts DC
Current Sink (Heat and Cool Cycle)	I_S	2.5	Amperes
Maximum Power Dissipation	P_{MAX}	6	Watts
Operating Temperature (Case)	$T_{MAX/MIN}$	100/–20	°C
Storage Temperature	T_{STG}	–65 to +150	°C

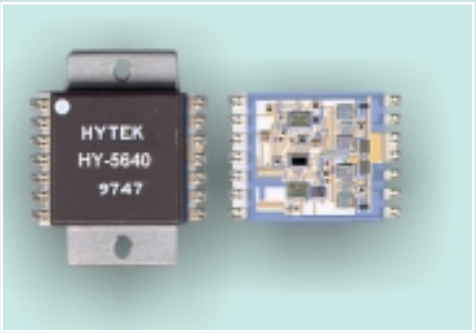

Features:

- Proportional/Integral (PI) control
- Small size
- Drive current to +/–2 amps
- Operation to 12 volts
- Control above/below ambient
- Temperature stability of 0.01°C
- Single supply operation
- Thru-hole or surface-mount packaging option

Figure 1

SIMPLIFIED SCHEMATIC OF THE HY5640 SHOWN WITHIN THE DASHED LINES

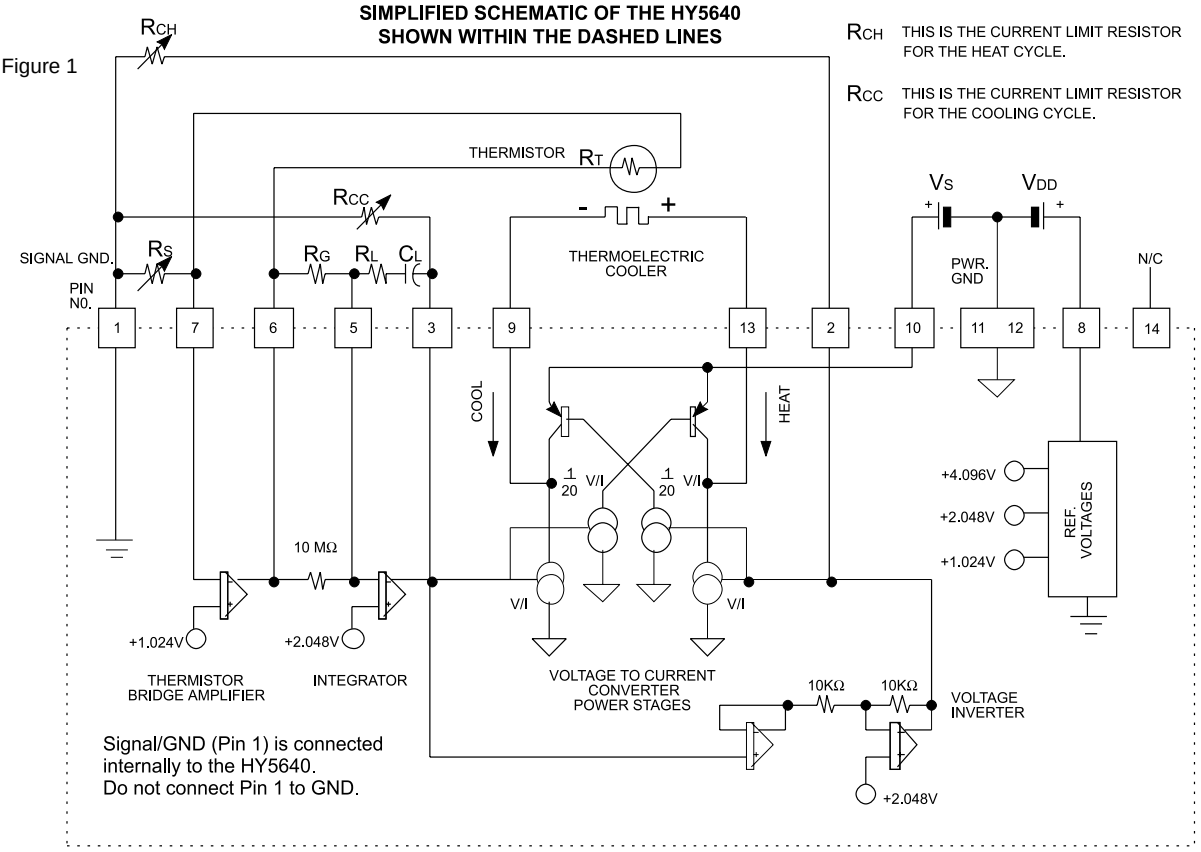

Description of the HY5640 Pin Outs

• Temperature Set Resistor Rs (Pin 1 to Pin 7)

The temperature set resistor for the HY5640 controls the temperature at which the TEC will operate. When the circuit has stabilized, the resistance of the thermistor will be equal to that of the set resistor Rs. For example, if a Dale 10kΩ thermistor is used as the temperature sensing device, a set resistor of approximately 56KΩ will set an operating temperature of –10°C. A graph of Rs vs. set temperature is shown in figure 4 when using a Dale 1M1002 thermistor.

• Thermistor, R_T (Pin 6 to Pin 7)

The thermistor should be located in close proximity to the device being temperature controlled by the TEC. It should be in good thermal contact to avoid stability problems.

The HY5640 has been designed for a negative temperature coefficient thermistor. A thermistor with a positive temperature coefficient can also be used if the position of the temperature set resistor and temperature sensing resistor are changed. The same result can also be achieved by reversing the leads of the TEC in which case Rcc and R_{CH} must be interchanged.

• Gain Set Resistor, R_G (Pin 5 to Pin 6)

The ratio of the gain set resistor R_G to R_L controls the response time of the servo loop. A ratio that is too large can cause slow response and a ratio that is too small can cause loop instability. In most applications R_G may not be needed since a 10MΩ resistor is internal to the HY5640 and generally provides enough gain for good operation.

• Loop Stability Network, R_L and C_L (Pin 3 to Pin 5)

The R_C time constant of these two components is a first approximation of the thermal time constant of the servo loop. The thermal time constant of the combination of the device being cooled, the thermistor, and the TEC can be approximated by applying constant power to the TEC and measuring the length of time it takes to reach 66% of its final temperature.

For example, if the thermal time constant was observed to be 5 seconds, then a 1µF capacitor and a 4.7MΩ could be chosen as the loop stabilizing components. Typical values for loop compensation components are shown in Table 1.

Note: The values of R_G, R_L, and C_L are generally selected by experiment. C_L should be a low leakage nonpolarized capacitor.

• Current Limit Resistors, Rcc & R_{CH} (Pin 1 to Pin 3, and Pin 1 to Pin 2)

These resistors limit the maximum current that the HY5640 can supply to the TEC when in the cooling cycle and in the heating cycle. Rcc limits the maximum current for the cooling cycle and R_{CH} limits the maximum current in the heating cycle. This feature prevents damage to the TEC during turn on. It is often desirable to limit the maximum value of heating current as much as 30% less than the maximum cooling current. This is because TECs are much more efficient heating than cooling. Figure 5 shows the approximate values for Rcc and R_{CH} required to program a desired turn on current. For example, an Rcc value of 17KΩ will limit the maximum cooling current to 1.5 Amperes and an R_{CH} value of 13.5KΩ will limit the maximum heating current to 0.5 Amperes.

• V_{DD} (Pin 8 to Pins 11 & 12) +5 < V_{DD} < +20 Volts

This input supplies the voltage to the internal circuitry of the HY5640. The maximum current drain at this terminal is 5mA.

• Vs (Pin 10 to Pins 11 & 12) +3 < Vs < +12 Volts

This input supplies the voltage to the HY5640 power drive circuitry. The maximum current drain at this terminal should not exceed 2 Amperes. Note that V_{DD} and V_S can be driven with the same power supply in the range of +5V < V_{DD} = V_S <+12V.

Ideally V_S is no more than 1.5V higher than the V_{MAX} of the selected TEC. Setting V_S higher than this can cause excessive heating of the controller.

• Thermoelectric Cooler, TEC (Pin 9 to Pin 13)

The cooling lead of the TEC should be connected to Pin 9 and the heating lead should be connected to Pin 13 of the HY5640. If the temperature of the thermistor is greater than the set temperature at turn on, maximum cooling current will flow into Pin 9 and out of Pin 13. Conversely, maximum heating current will flow into Pin 13 and out of Pin 9 if the temperature of the thermistor is less than the set temperature at turn on. The maximum turn on current is limited by Rcc and R_{CH}. Once the TEC reaches its set temperature, the current through the TEC will decrease to exactly the value required to maintain the correct set temperature.

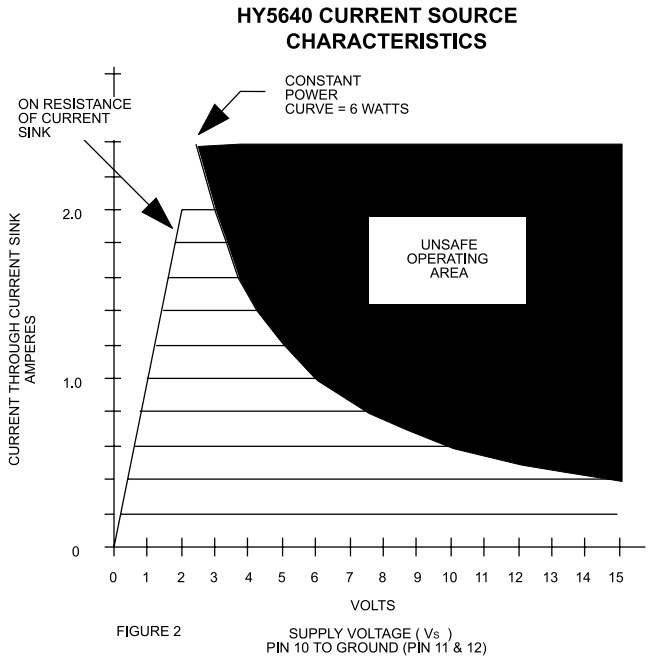

FIGURE 2

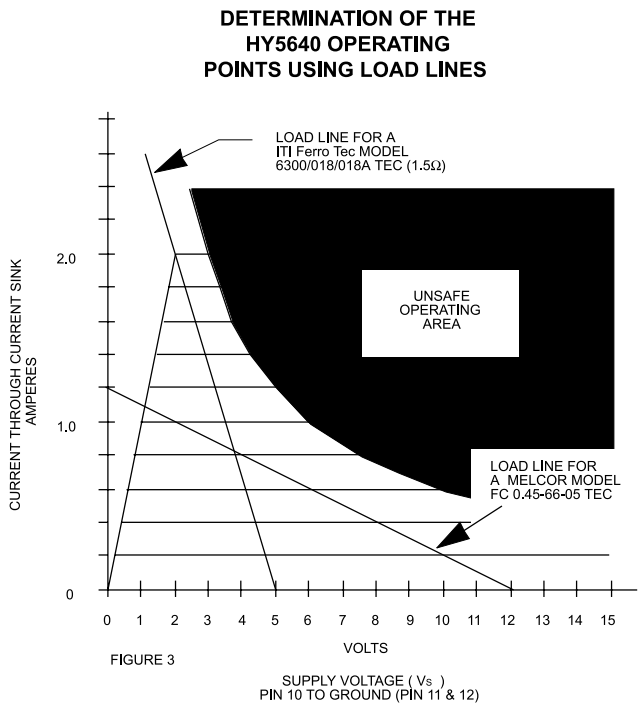

FIGURE 3

Figure 2 illustrates the characteristics of the HY5640 power drive section. It also illustrates the unsafe operating area where the power dissipated in the device exceeds the maximum 6 Watt rating. This curve applies for both heating and cooling operation.

Note that the resistance of the power drive section is approximately one ohm when the HY5640 is fully turned on.

Figure 3 illustrates the locus of operating current and voltage for two different TECs.

Example 1:
A supply voltage of 5 Volts was chosen for use with the ITI Ferro Tek Model 6300/018/018A TEC. This device is rated for a maximum current of 1.8 Amperes at a maximum allowable voltage of 2.7 Volts. This is a load resistance of approximately 1.5 ohms. The intersection of the 1.5 ohm load line and the HY5640 current source characteristics defines the locus of operation voltage and current for both the HY5640 and the TEC. In this application the current was limited to 1.8 Amperes when cooling and to 0.6 Amperes when heating by proper selection of R_{CC} and R_{CH}.

Example 2:
A supply voltage of 12 Volts was chosen for the Melcor FC 0.45-66-05 TEC. This device has a maximum rated voltage of 7.98 Volts at a current of 0.8 Amperes. A load line for this device is also shown on the plot. Once again maximum turn on current is set by proper selection of R_{CC} and R_{CH}.

Note that the power dissipated in the HY5640 never exceeds the 6 Watt maximum power dissipation in both of these examples.

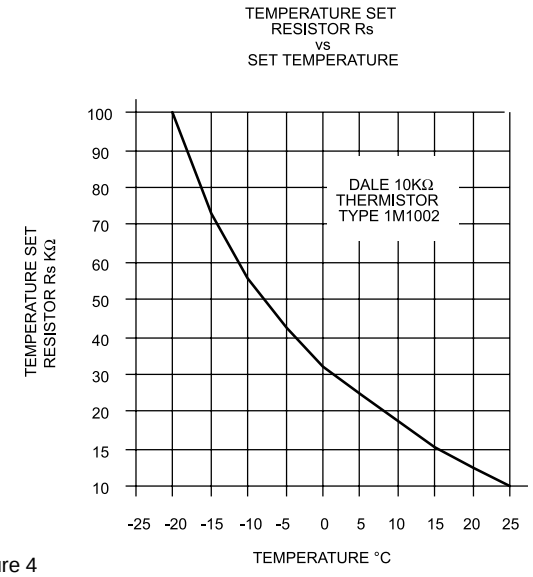

Figure 4

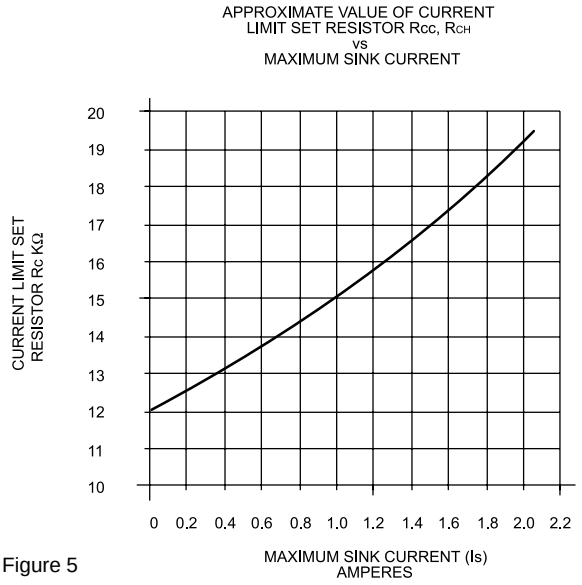

Figure 5

MECHANICAL DIMENSIONS

(All dimensions are in inches)

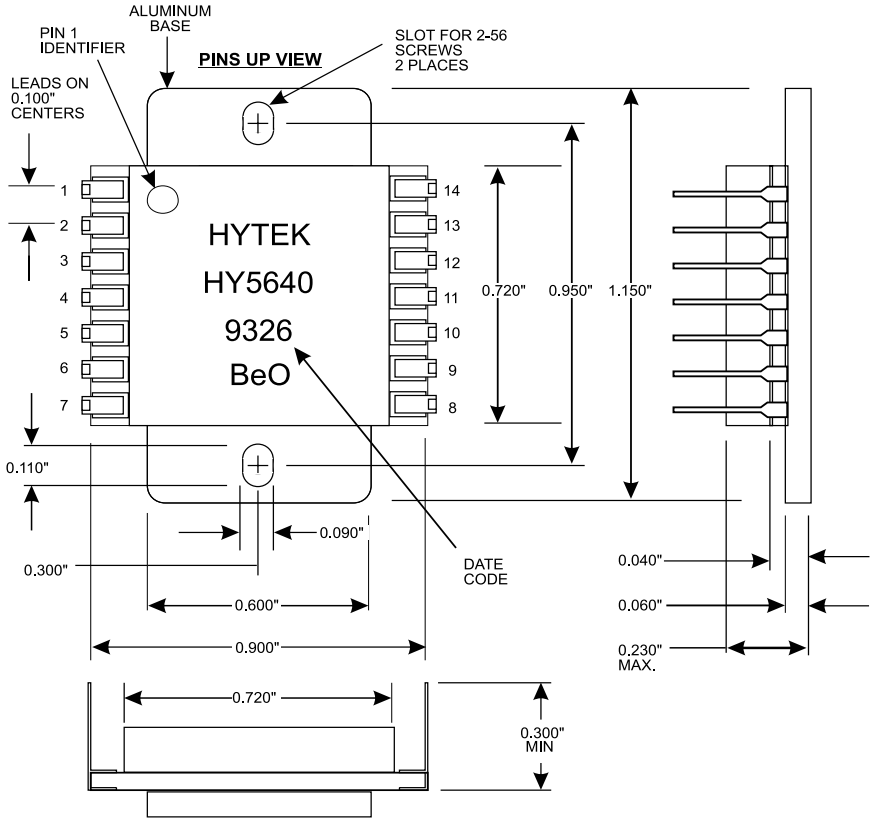

Figure 6

TYPICAL RESISTOR
AND CAPACITOR VALUES
FOR VARIOUS THERMAL
TIME CONSTANTS

THERMAL TIME CONSTANT T (SECONDS)	R_L	C_L	R_g
1	10 MΩ	0.1 µF	100KΩ
2	20 MΩ	0.1 µF	to
3	3 MΩ	1.0 µF	10MΩ
5	4.7 MΩ	1.0 µF	↓
10	10 MΩ	1.0 µF	
15	15 MΩ	1.0 µF	
20	20 MΩ	1.0 µF	

TABLE 1

NOTES:

1. Make certain the heat sink to which the HY5640 is mounted is flat and clean, otherwise the ceramic substrate may break.
2. Use a thermal compound such as Dow Corning 340 between the HY5640 and the heat sink for good thermal conduction.
3. Note that the Pin 1 identifier is shown in a bottom view. From a top view, Pin numbers ascend in clockwise fashion.

Specifications subject to change without notice.

SLVS047G – NOVEMBER 1981 – REVISED SEPTEMBER 2003

- **Output Voltage Range Adjustable From –1.2 V to –37 V**
- **Output Current Capability of 1.5 A Max**
- **Input Regulation Typically 0.01% Per Input-Voltage Change**
- **Output Regulation Typically 0.3%**
- **Peak Output Current Constant Over Temperature Range of Regulator**
- **Ripple Rejection Typically 77 dB**
- **Direct Replacement for Industry-Standard LM237 and LM337**

LM237, LM337 . . . KC (TO-220) PACKAGE
(TOP VIEW)

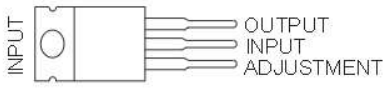

LM337 . . . KTE OR KTP PACKAGE
(TOP VIEW)

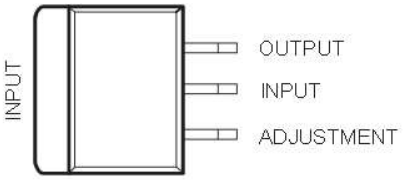

description/ordering information

The LM237 and LM337 are adjustable 3-terminal negative-voltage regulators capable of supplying in excess of –1.5 A over an output voltage range of –1.2 V to –37 V. They are exceptionally easy to use, requiring only two external resistors to set the output voltage and one output capacitor for frequency compensation. The current design has been optimized for excellent regulation and low thermal transients. In addition, the LM237 and LM337 feature internal current limiting, thermal shutdown, and safe-area compensation, making them virtually immune to failure by overloads.

The LM237 and LM337 serve a wide variety of applications, including local on-card regulation, programmable output-voltage regulation, and precision current regulation.

ORDERING INFORMATION

T_J	PACKAGE†		ORDERABLE PART NUMBER	TOP-SIDE MARKING
–25°C to 150°C	TO-220 (KC)	Tube of 50	LM237KC	LM237
0°C to 125°C	PowerFLEX™ (KTE)	Reel of 2000	LM337KTER	LM337
	PowerFLEX™ (KTP)	Reel of 3000	LM337KTPR	L337
	TO-220 (KC)	Tube of 50	LM337KC	LM337

† Package drawings, standard packing quantities, thermal data, symbolization, and PCB design guidelines are available at www.ti.com/sc/package.

Please be aware that an important notice concerning availability, standard warranty, and use in critical applications of Texas Instruments semiconductor products and disclaimers thereto appears at the end of this data sheet.

PowerFLEX is a trademark of Texas Instruments.

PRODUCTION DATA information is current as of publication date. Products conform to specifications per the terms of Texas Instruments standard warranty. Production processing does not necessarily include testing of all parameters.

Copyright © 2003, Texas Instruments Incorporated

schematic diagram

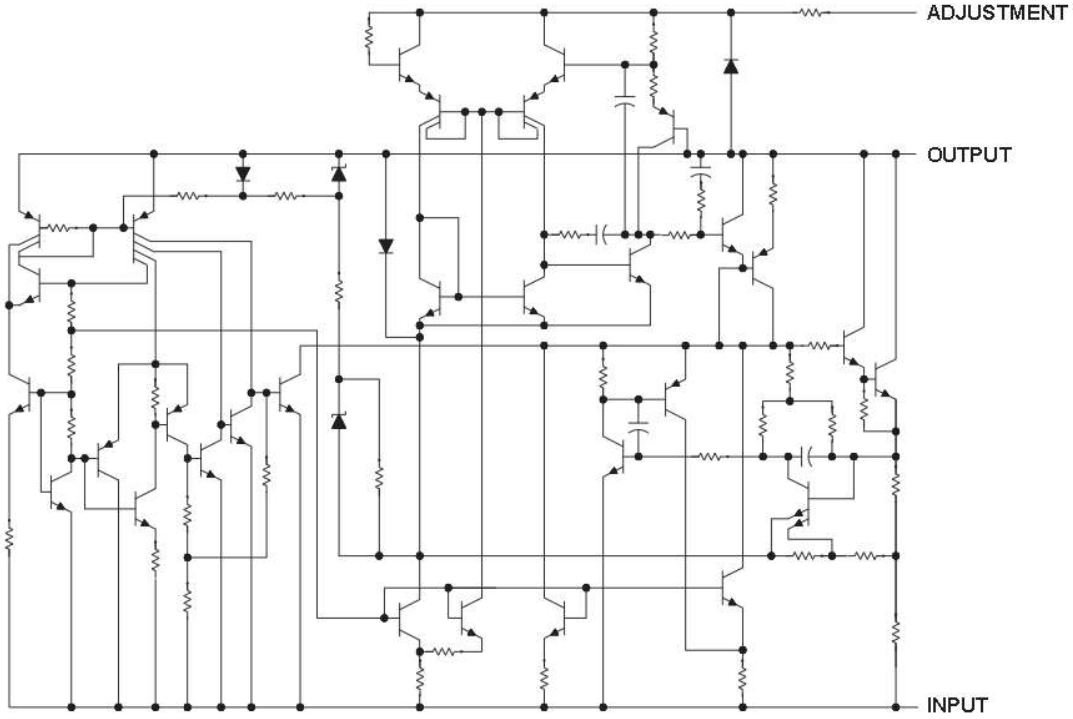

absolute maximum ratings over operating temperature ranges (unless otherwise noted)†

Input-to-output differential voltage, $V_I - V_O$ . . . . . –40 V
Operating virtual junction temperature, T_J . . . . . 150°C
Lead temperature 1,6 mm (1/16 inch) from case for 10 seconds . . . . . 260°C
Storage temperature range, T_{stg} . . . . . –65°C to 150°C

† Stresses beyond those listed under "absolute maximum ratings" may cause permanent damage to the device. These are stress ratings only, and functional operation of the device at these or any other conditions beyond those indicated under "recommended operating conditions" is not implied. Exposure to absolute-maximum-rated conditions for extended periods may affect device reliability.

package thermal data (see Note 1)

PACKAGE	BOARD	θ_{JC}	θ_{JA}
PowerFLEX™ (KTE)	High K, JESD 51-5	3ºC/W	23ºC/W
PowerFLEX™ (KTP)	High K, JESD 51-5	19ºC/W	28ºC/W
TO-220 (KC)	High K, JESD 51-5	3ºC/W	19ºC/W

NOTE 1: Maximum power dissipation is a function of $T_J(max)$, θ_{JA}, and T_A. The maximum allowable power dissipation at any allowable ambient temperature is $P_D = (T_J(max) - T_A)/\theta_{JA}$. Operating at the absolute maximum T_J of 150ºC can affect reliability.

recommended operating conditions

				MIN	MAX	UNIT
I_O	Output current	$\lvert V_I - V_O \rvert \le 40$ V, P ≤ 15 W		10	1500	mA
		$\lvert V_I - V_O \rvert \le 10$ V, P ≤ 15 W		6	1500	
T_J	Operating virtual junction temperature		LM237	–25	150	ºC
			LM337	0	125	

electrical characteristics over recommended ranges of operating virtual junction temperature (unless otherwise noted)

PARAMETER	TEST CONDITIONS†		LM237			LM337			UNIT
			MIN	TYP	MAX	MIN	TYP	MAX	
Input regulation‡	$V_I - V_O$ = –3 V to –40 V	T_J = 25°C		0.01	0.02		0.01	0.04	%/V
		T_J = MIN to MAX		0.02	0.05		0.02	0.07	
Ripple rejection	V_O = –10 V,	f = 120 Hz		60			60		dB
	V_O = –10 V, f = 120 Hz,	C_{ADJ} = 10 µF	66	77		66	77		
Output regulation	I_O = 10 mA to 1.5 A, T_J = 25°C	$\|V_O\| \le 5$ V			25			50	mV
		$\|V_O\| \ge 5$ V		0.3%	0.5%		0.3%	1%	
	I_O = 10 mA to 1.5 A	$\|V_O\| \le 5$ V			50			70	mV
		$\|V_O\| \ge 5$ V			1%			1.5%	
Output-voltage change with temperature	T_J = MIN to MAX			0.6%			0.6%		
Output-voltage long-term drift	After 1000 h at T_J = MAX and $V_I - V_O$ = –40 V			0.3%	1%		0.3%	1%	
Output noise voltage	f = 10 Hz to 10 kHz,	T_J = 25°C		0.003%			0.003%		
Minimum output current to maintain regulation	$\|V_I - V_O\| \le 40$ V			2.5	5		2.5	10	mA
	$\|V_I - V_O\| \le 10$ V			1.2	3		1.5	6	
Peak output current	$\|V_I - V_O\| \le 15$ V		1.5	2.2		1.5	2.2		A
	$\|V_I - V_O\| \le 40$ V,	T_J = 25°C	0.24	0.4		0.15	0.4		
Adjustment-terminal current				65	100		65	100	µA
Change in adjustment-terminal current	$V_I - V_O$ = – 2.5 V to –40 V, I_O = 10 mA to MAX	T_J = 25°C,		2	5		2	5	µA
Reference voltage (output to ADJ)	$V_I - V_O$ = – 3 V to –40 V, I_O = 10 mA to 1.5 A, P ≤ rated dissipation	T_J = 25°C	–1.225	–1.25	–1.275	–1.213	–1.25	–1.287	V
		T_J = MIN to MAX	–1.2	–1.25	–1.3	–1.2	–1.25	–1.3	
Thermal regulation	Initial T_J = 25°C,	10-ms pulse		0.002	0.02		0.003	0.04	%/W

† Unless otherwise noted, these specifications apply for the following test conditions $|V_I - V_O|$ = 5 V and I_O = 0.5 A. For conditions shown as MIN or MAX, use the appropriate value specified under recommended operating conditions. All characteristics are measured with a 0.1-µF capacitor across the input and a 1-µF capacitor across the output. Pulse-testing techniques are used to maintain the junction temperature as close to the ambient temperature as possible. Thermal effects must be taken into account separately.

‡ Input regulation is expressed here as the percentage change in output voltage per 1-V change at the input.

electrical characteristics, T_J = 25°C

PARAMETER	TEST CONDITIONS†		LM237, LM337			UNIT
			MIN	TYP	MAX	
Input regulation‡	$V_I - V_O$ = –3 V to –40 V			0.01	0.04	%/V
Ripple rejection	V_O = –10 V,	f = 120 Hz		60		dB
	V_O = –10 V, C_{ADJ} = 10 µF,	f = 120 Hz	66	77		
Output regulation	I_O = 10 mA to 1.5 A	$\|V_O\| \le 5$ V			50	mV
		$\|V_O\| \ge 5$ V		0.3%	1%	
Output noise voltage	f = 10 Hz to 10 kHz			0.003%		
Minimum output current to maintain regulation	$\|V_I - V_O\| \le 40$ V			2.5	10	mA
	$\|V_I - V_O\| \le 10$ V			1.5	6	
Peak output current	$\|V_I - V_O\| \le 15$ V		1.5	2.2		A
	$\|V_I - V_O\| \le 40$ V		0.15	0.4		
Adjustment-terminal current				65	100	µA
Change in adjustment-terminal current	$V_I - V_O$ = – 2.5 V to –40 V,	I_O = 10 mA to MAX		2	5	µA
Reference voltage (output to ADJ)	$V_I - V_O$ = – 3 V to –40 V, P ≤ rated dissipation	I_O = 10 mA to 1.5 A,	–1.213	–1.25	–1.287	V

† Unless otherwise noted, these specifications apply for the following test conditions $|V_I - V_O|$ = 5 V and I_O = 0.5A. All characteristics are measured with a 0.1-µF capacitor across the input and a 1-µF capacitor across the output. Pulse-testing techniques are used to maintain the junction temperature as close to the ambient temperature as possible. Thermal effects must be taken into account separately.

‡ Input regulation is expressed here as the percentage change in output voltage per 1-V change at the input.

APPLICATION INFORMATION

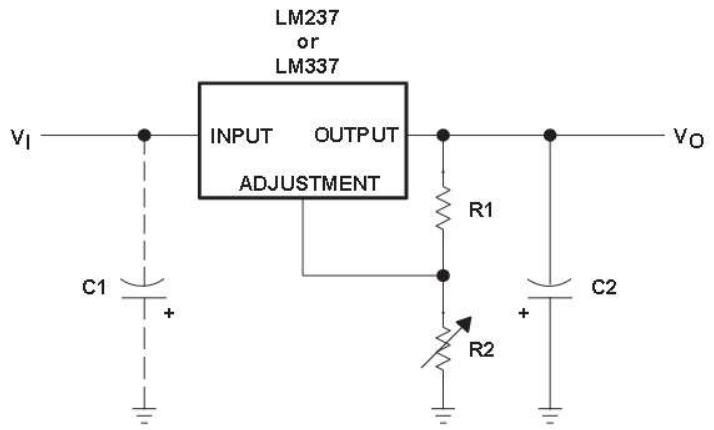

R1 typically is 120 Ω.

$$R2 = R1\left(\frac{-V_O}{-1.25} - 1\right)$$, where V_O is the output in volts.

C1 is a 1-µF solid tantalum capacitor required only if the regulator is more than 10 cm (4 in) from the power-supply filter capacitor.
C2 is a 1-µF solid tantalum or 10-µF aluminum electrolytic capacitor required for stability.

Figure 1. Adjustable Negative-Voltage Regulator

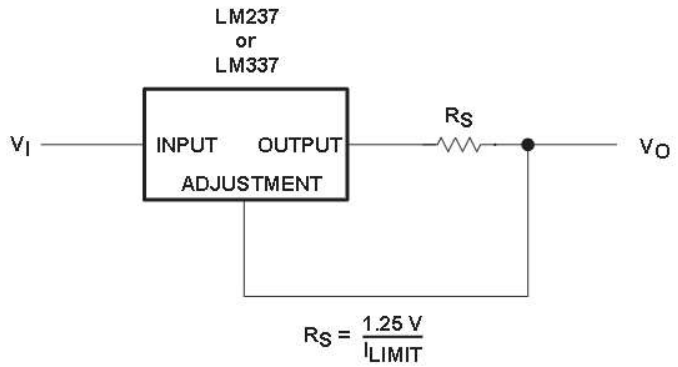

Figure 2. Current-Limiting Circuit

PACKAGING INFORMATION

Orderable Device	Status [1]	Package Type	Package Drawing	Pins	Package Qty	Eco Plan [2]	Lead/Ball Finish	MSL Peak Temp [3]
LM237KC	ACTIVE	TO-220	KC	3	50	TBD	CU SNPB	Level-NC-NC-NC
LM237KTER	OBSOLETE	PFM	KTE	3		TBD	Call TI	Call TI
LM337KC	ACTIVE	TO-220	KC	3	50	TBD	CU SNPB	Level-NC-NC-NC
LM337KTER	ACTIVE	PFM	KTE	3	2000	TBD	CU SNPB	Level-1-220C-UNLIM
LM337KTPR	ACTIVE	PFM	KTP	2	3000	TBD	CU SNPB	Level-1-220C-UNLIM
LM337KTPRG3	ACTIVE	PFM	KTP	2	3000	Green (RoHS & no Sb/Br)	CU SN	Level-1-260C-UNLIM
LM337Y	OBSOLETE	XCEPT	Y	0		TBD	Call TI	Call TI

[1] The marketing status values are defined as follows:
ACTIVE: Product device recommended for new designs.
LIFEBUY: TI has announced that the device will be discontinued, and a lifetime-buy period is in effect.
NRND: Not recommended for new designs. Device is in production to support existing customers, but TI does not recommend using this part in a new design.
PREVIEW: Device has been announced but is not in production. Samples may or may not be available.
OBSOLETE: TI has discontinued the production of the device.

[2] Eco Plan - The planned eco-friendly classification: Pb-Free (RoHS) or Green (RoHS & no Sb/Br) - please check http://www.ti.com/productcontent for the latest availability information and additional product content details.
TBD: The Pb-Free/Green conversion plan has not been defined.
Pb-Free (RoHS): TI's terms "Lead-Free" or "Pb-Free" mean semiconductor products that are compatible with the current RoHS requirements for all 6 substances, including the requirement that lead not exceed 0.1% by weight in homogeneous materials. Where designed to be soldered at high temperatures, TI Pb-Free products are suitable for use in specified lead-free processes.
Green (RoHS & no Sb/Br): TI defines "Green" to mean Pb-Free (RoHS compatible), and free of Bromine (Br) and Antimony (Sb) based flame retardants (Br or Sb do not exceed 0.1% by weight in homogeneous material)

[3] MSL, Peak Temp. -- The Moisture Sensitivity Level rating according to the JEDEC industry standard classifications, and peak solder temperature.

Important Information and Disclaimer: The information provided on this page represents TI's knowledge and belief as of the date that it is provided. TI bases its knowledge and belief on information provided by third parties, and makes no representation or warranty as to the accuracy of such information. Efforts are underway to better integrate information from third parties. TI has taken and continues to take reasonable steps to provide representative and accurate information but may not have conducted destructive testing or chemical analysis on incoming materials and chemicals. TI and TI suppliers consider certain information to be proprietary, and thus CAS numbers and other limited information may not be available for release.

In no event shall TI's liability arising out of such information exceed the total purchase price of the TI part(s) at issue in this document sold by TI to Customer on an annual basis.

KTE (R-PSFM-G3) **PowerFLEX™ PLASTIC FLANGE-MOUNT**

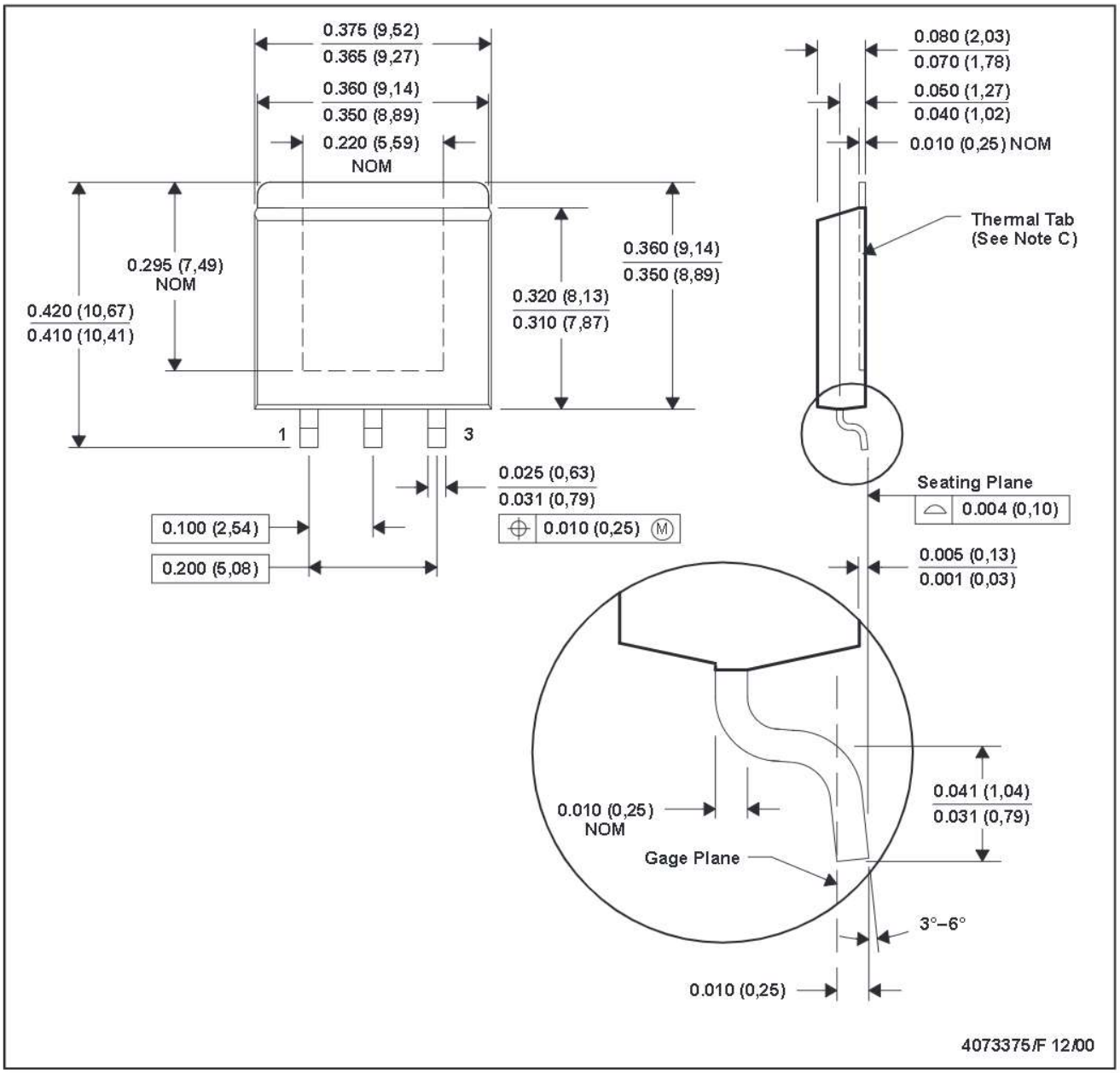

NOTES: A. All linear dimensions are in inches (millimeters).
B. This drawing is subject to change without notice.
C. The center lead is in electrical contact with the thermal tab.
D. Dimensions do not include mold protrusions, not to exceed 0.006 (0,15).
E. Falls within JEDEC MO-169

PowerFLEX is a trademark of Texas Instruments.

KTP (R-PSFM-G2) **PowerFLEX™ PLASTIC FLANGE-MOUNT PACKAGE**

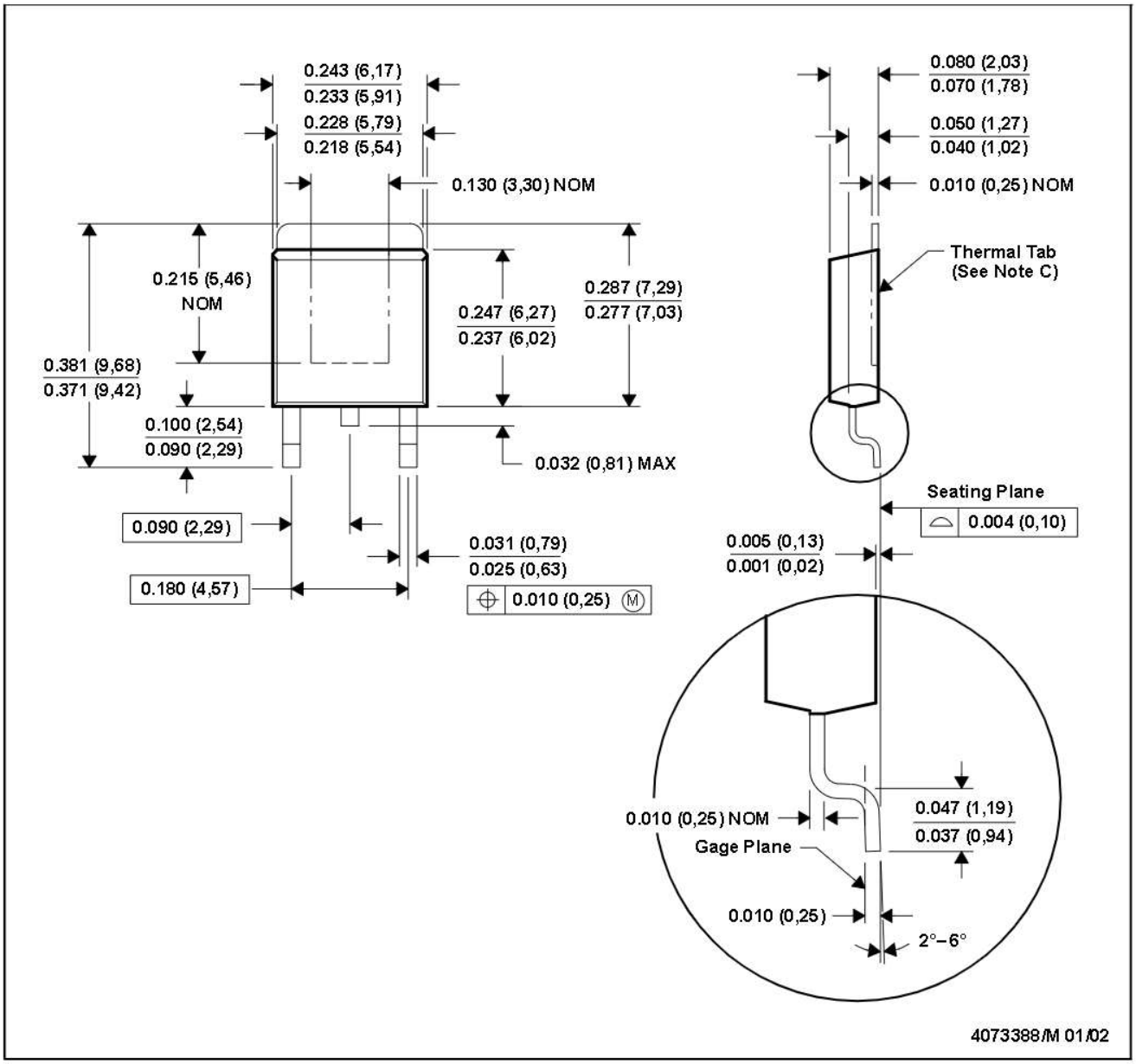

NOTES: A. All linear dimensions are in inches (millimeters).
B. This drawing is subject to change without notice.
C. The center lead is in electrical contact with the thermal tab.
D. Dimensions do not include mold protrusions, not to exceed 0.006 (0,15).
E. Falls within JEDEC TO-252 variation AC.

PowerFLEX is a trademark of Texas Instruments.

KC (R–PSFM–T3) PLASTIC FLANGE–MOUNT PACKAGE

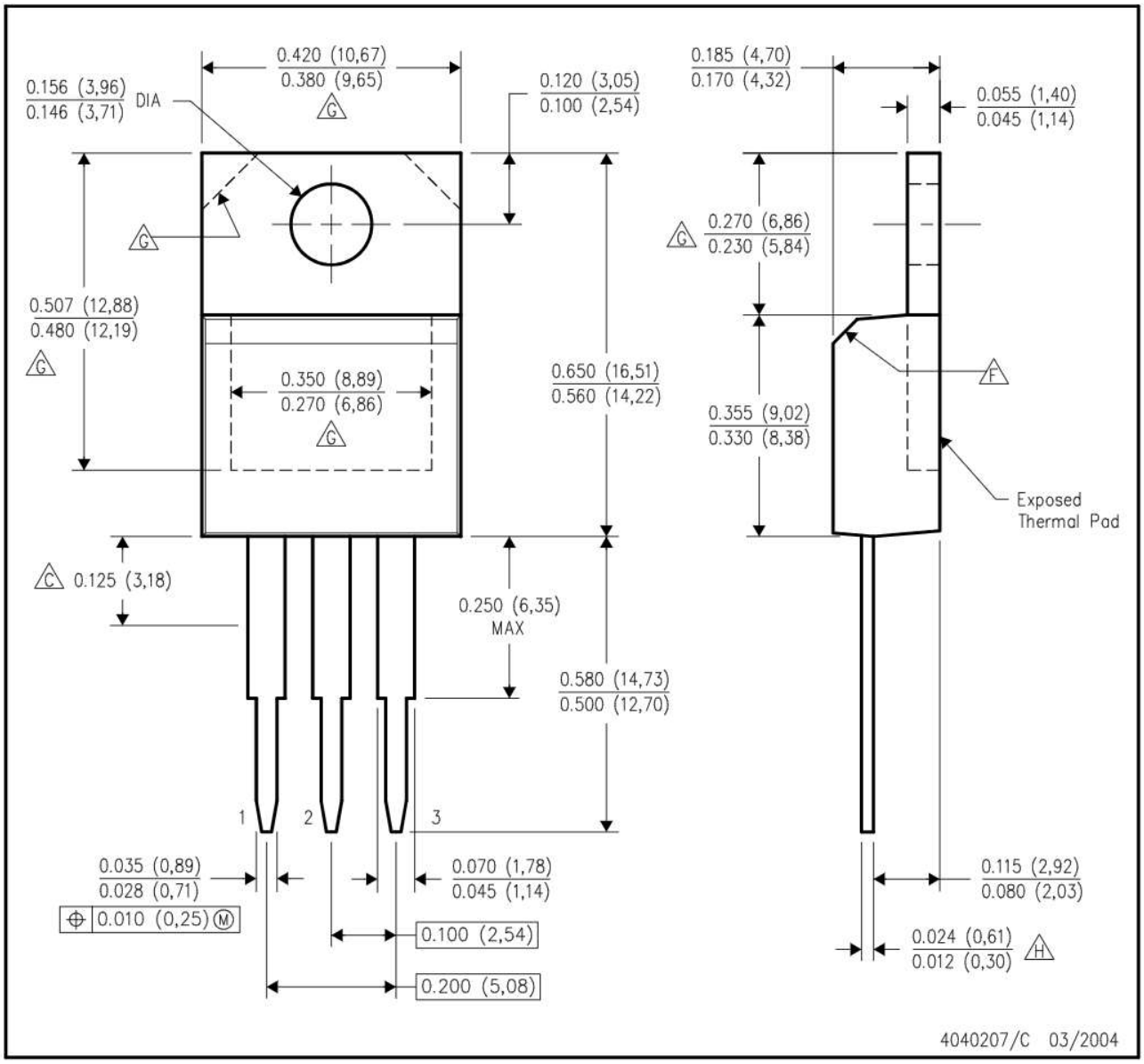

NOTES:
- A. All linear dimensions are in inches (millimeters).
- B. This drawing is subject to change without notice.
- C. Lead dimensions are not controlled within this area.
- D. All lead dimensions apply before solder dip.
- E. The center lead is in electrical contact with the mounting tab.
- F. The chamfer is optional.
- G. Thermal pad contour optional within these dimensions.
- H. Falls within JEDEC TO–220 variation AB, except minimum lead thickness.

IMPORTANT NOTICE

Texas Instruments Incorporated and its subsidiaries (TI) reserve the right to make corrections, modifications, enhancements, improvements, and other changes to its products and services at any time and to discontinue any product or service without notice. Customers should obtain the latest relevant information before placing orders and should verify that such information is current and complete. All products are sold subject to TI's terms and conditions of sale supplied at the time of order acknowledgment.

TI warrants performance of its hardware products to the specifications applicable at the time of sale in accordance with TI's standard warranty. Testing and other quality control techniques are used to the extent TI deems necessary to support this warranty. Except where mandated by government requirements, testing of all parameters of each product is not necessarily performed.

TI assumes no liability for applications assistance or customer product design. Customers are responsible for their products and applications using TI components. To minimize the risks associated with customer products and applications, customers should provide adequate design and operating safeguards.

TI does not warrant or represent that any license, either express or implied, is granted under any TI patent right, copyright, mask work right, or other TI intellectual property right relating to any combination, machine, or process in which TI products or services are used. Information published by TI regarding third-party products or services does not constitute a license from TI to use such products or services or a warranty or endorsement thereof. Use of such information may require a license from a third party under the patents or other intellectual property of the third party, or a license from TI under the patents or other intellectual property of TI.

Reproduction of information in TI data books or data sheets is permissible only if reproduction is without alteration and is accompanied by all associated warranties, conditions, limitations, and notices. Reproduction of this information with alteration is an unfair and deceptive business practice. TI is not responsible or liable for such altered documentation.

Resale of TI products or services with statements different from or beyond the parameters stated by TI for that product or service voids all express and any implied warranties for the associated TI product or service and is an unfair and deceptive business practice. TI is not responsible or liable for any such statements.

Following are URLs where you can obtain information on other Texas Instruments products and application solutions:

Products		**Applications**	
Amplifiers	amplifier.ti.com	Audio	www.ti.com/audio
Data Converters	dataconverter.ti.com	Automotive	www.ti.com/automotive
DSP	dsp.ti.com	Broadband	www.ti.com/broadband
Interface	interface.ti.com	Digital Control	www.ti.com/digitalcontrol
Logic	logic.ti.com	Military	www.ti.com/military
Power Mgmt	power.ti.com	Optical Networking	www.ti.com/opticalnetwork
Microcontrollers	microcontroller.ti.com	Security	www.ti.com/security
		Telephony	www.ti.com/telephony
		Video & Imaging	www.ti.com/video
		Wireless	www.ti.com/wireless

Mailing Address: Texas Instruments
Post Office Box 655303 Dallas, Texas 75265

Copyright © 2005, Texas Instruments Incorporated

Order this document by LM350/D

MOTOROLA

LM350

Three-Terminal Adjustable Output Positive Voltage Regulator

The LM350 is an adjustable three–terminal positive voltage regulator capable of supplying in excess of 3.0 A over an output voltage range of 1.2 V to 33 V. This voltage regulator is exceptionally easy to use and requires only two external resistors to set the output voltage. Further, it employs internal current limiting, thermal shutdown and safe area compensation, making it essentially blow–out proof.

The LM350 serves a wide variety of applications including local, on card regulation. This device also makes an especially simple adjustable switching regulator, a programmable output regulator, or by connecting a fixed resistor between the adjustment and output, the LM350 can be used as a precision current regulator.

- Guaranteed 3.0 A Output Current
- Output Adjustable between 1.2 V and 33 V
- Load Regulation Typically 0.1%
- Line Regulation Typically 0.005%/V
- Internal Thermal Overload Protection
- Internal Short Circuit Current Limiting Constant with Temperature
- Output Transistor Safe Area Compensation
- Floating Operation for High Voltage Applications
- Standard 3–lead Transistor Package
- Eliminates Stocking Many Fixed Voltages

THREE–TERMINAL ADJUSTABLE POSITIVE VOLTAGE REGULATOR

SEMICONDUCTOR TECHNICAL DATA

T SUFFIX
PLASTIC PACKAGE
CASE 221A

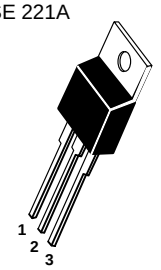

Pin 1. Adjust
2. V_{out}
3. V_{in}

Heatsink surface is connected to Pin 2.

Simplified Application

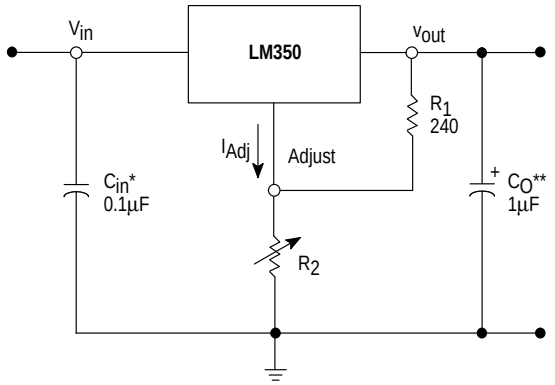

* = C_{in} is required if regulator is located an appreciable distance from power supply filter.
** = C_O is not needed for stability, however, it does improve transient response.

$$V_{out} = 1.25\ V\left(1 + \frac{R_2}{R_1}\right) + I_{Adj}\,R_2$$

Since I_{Adj} is controlled to less than 100 µA, the error associated with this term is negligible in most applications.

ORDERING INFORMATION

Device	Operating Temperature Range	Package
LM350T	T_J = 0° to +125°C	Plastic Power
LM350BT#	T_J = –40° to +125°C	Plastic Power

Automotive temperature range selections are available with special test conditions and additional tests. Contact your local Motorola sales office for information.

© Motorola, Inc. 1996

MAXIMUM RATINGS

Rating	Symbol	Value	Unit
Input–Output Voltage Differential	$V_I–V_O$	35	Vdc
Power Dissipation	P_D	Internally Limited	W
Operating Junction Temperature Range	T_J	–40 to +125	°C
Storage Temperature Range	T_{stg}	–65 to +150	°C
Soldering Lead Temperature (10 seconds)	T_{solder}	300	°C

ELECTRICAL CHARACTERISTICS ($V_I–V_O$ = 5.0 V; I_L = 1.5 A; $T_J = T_{low}$ to T_{high}; P_{max} [Note 1], unless otherwise noted.)

Characteristics	Figure	Symbol	Min	Typ	Max	Unit
Line Regulation (Note 2) T_A = 25°C, 3.0 V ≤ $V_I–V_O$ ≤ 35 V	1	Reg_{line}	–	0.0005	0.03	%/V
Load Regulation (Note 2) T_A = 25°C, 10 mA ≤ I_I ≤ 3.0 A V_O ≤ 5.0 V V_O ≥ 5.0 V	2	Reg_{load}	 – –	 5.0 0.1	 25 0.5	 mV % V_O
Thermal Regulation, Pulse = 20 ms, (T_A = +25°C)		Reg_{therm}	–	0.002	–	% V_O/W
Adjustment Pin Current	3	I_{Adj}	–	50	100	µA
Adjustment Pin Current Change 3.0 V ≤ $V_I–V_O$ ≤ 35 V 10 mA ≤ I_L ≤ 3.0 A, P_D ≤ P_{max}	1,2	ΔI_{Adj}	–	0.2	5.0	µA
Reference Voltage 3.0 V ≤ $V_I–V_O$ ≤ 35 V 10 mA ≤ I_O ≤ 3.0 A, P_D ≤ P_{max}	3	V_{ref}	1.20	1.25	1.30	V
Line Regulation (Note 2) 3.0 V ≤ $V_I–V_O$ ≤ 35 V	1	Reg_{line}	–	0.02	0.07	%/V
Load Regulation (Note 2) 10 mA ≤ I_L ≤ 3.0 A V_O ≤ 5.0 V V_O ≥ 5.0 V	2	Reg_{load}	 – –	 20 0.3	 70 1.5	 mV % V_O
Temperature Stability ($T_{low} \le T_J \le T_{high}$)	3	T_S	–	1.0	–	% V_O
Minimum Load Current to Maintain Regulation ($V_I–V_O$ = 35 V)	3	I_{Lmin}	–	3.5	10	mA
Maximum Output Current $V_I–V_O$ ≤ 10 V, P_D ≤ P_{max} $V_I–V_O$ = 30 V, P_D ≤ P_{max}, T_A = 25°C	3	I_{max}	 3.0 0.25	 4.5 1.0	 – –	A
RMS Noise, % of V_O T_A= 25°C, 10 Hz ≤ f ≤ 10 kHz		N	–	0.003	–	% V_O
Ripple Rejection, V_O = 10 V, f = 120 Hz (Note 3) Without C_{Adj} C_{Adj} = 10 µF	4	RR	 – 66	 65 80	 – –	dB
Long Term Stability, $T_J = T_{high}$ (Note 4) T_A= 25°C for Endpoint Measurements	3	S	–	0.3	1.0	%/1.0 k Hrs.
Thermal Resistance, Junction–to–Case Peak (Note 5) Average (Note 6)		$R_{\theta JC}$	 – –	 2.3 –	 – 1.5	°C/W

NOTES: 1. T_{low} to T_{high} = 0° to +125°C; P_{max} = 25 W for LM350T; T_{low} to T_{high} = –40° to +125°C; P_{max} = 25 W for LM350BT
2. Load and line regulation are specified at constant junction temperature. Changes in V_O due to heating effects must be taken into account separately. Pulse testing with low duty cycle is used.
3. C_{Adj}, when used, is connected between the adjustment pin and ground.
4. Since Long–Term Stability cannot be measured on each device before shipment, this specification is an engineering estimate of average stability from lot to lot.
5. Thermal Resistance evaluated measuring the hottest temperature on the die using an infrared scanner. This method of evaluation yields very accurate thermal resistance values which are conservative when compared to the other measurement techniques.
6. The average die temperature is used to derive the value of thermal resistance junction to case (average).

Representative Schematic Diagram

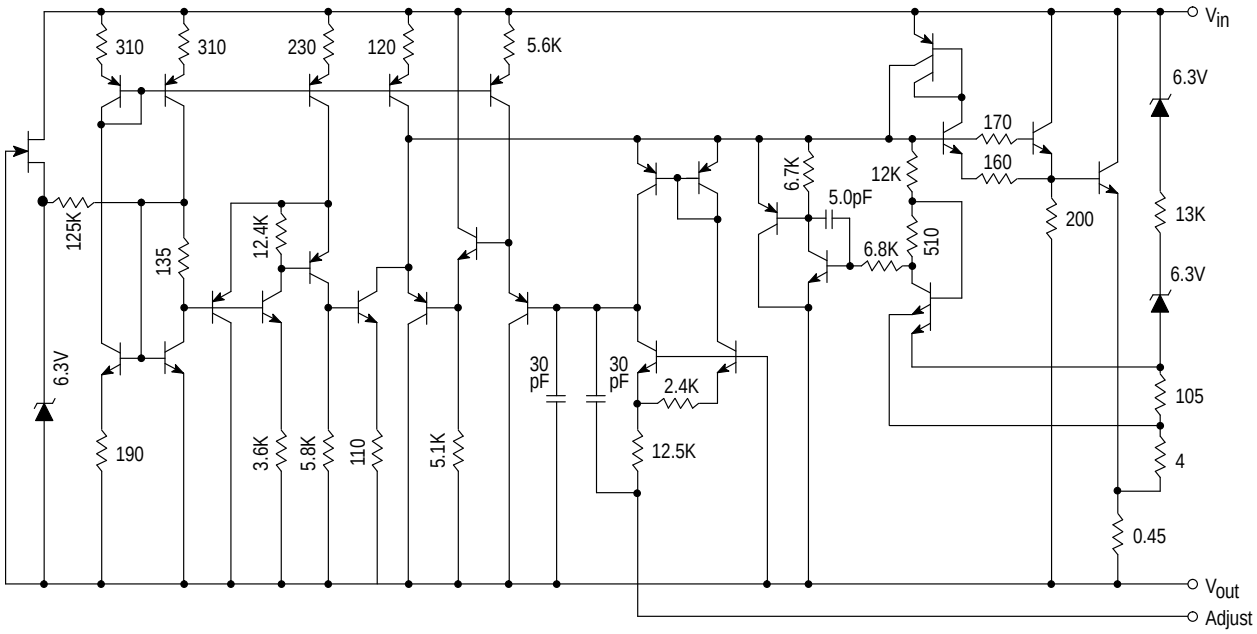

Figure 1. Line Regulation and ΔI_{Adj}/Line Test Circuit

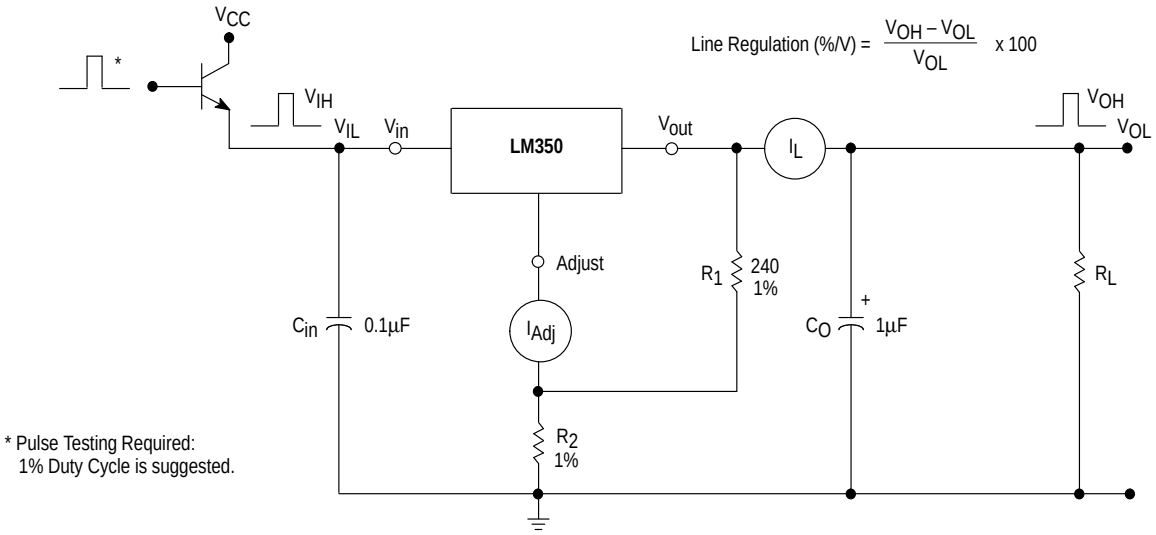

Figure 2. Load Regulation and ΔI_{Adj}/Load Test Circuit

$$\text{Load Regulation (\% } V_O) = \frac{V_O \text{ (min Load)} - V_O \text{ (max Load)}}{V_O \text{ (min Load)}} \times 100$$

$$\text{Load Regulation (mV)} = V_O \text{ (min Load)} - V_O \text{ (max Load)}$$

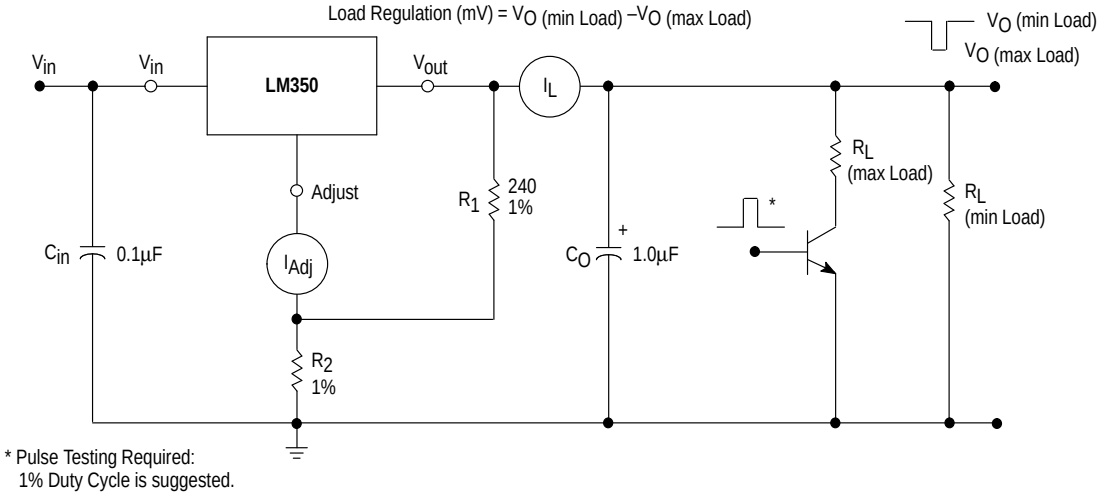

* Pulse Testing Required:
1% Duty Cycle is suggested.

Figure 3. Standard Test Circuit

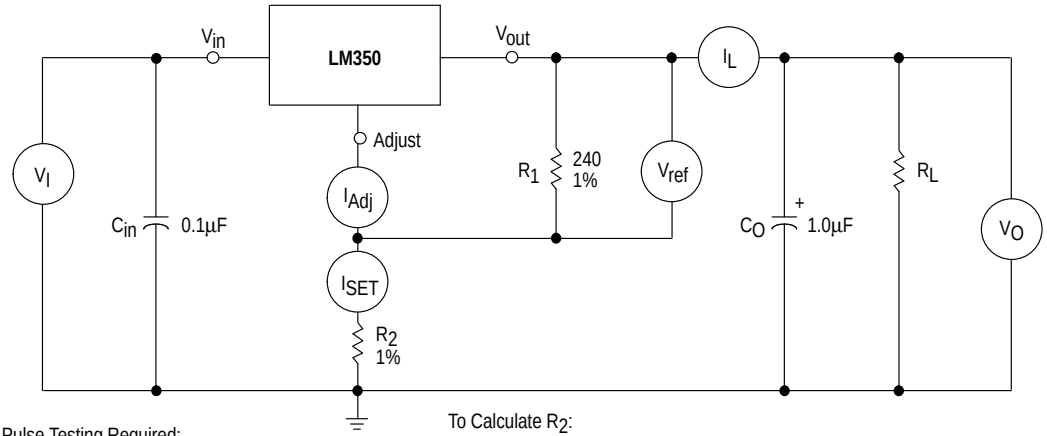

Pulse Testing Required:
1% Duty Cycle is suggested.

To Calculate R_2:
$V_{out} = I_{SET} R_2 + 1.250$ V
Assume $I_{SET} = 5.25$ mA

Figure 4. Ripple Rejection Test Circuit

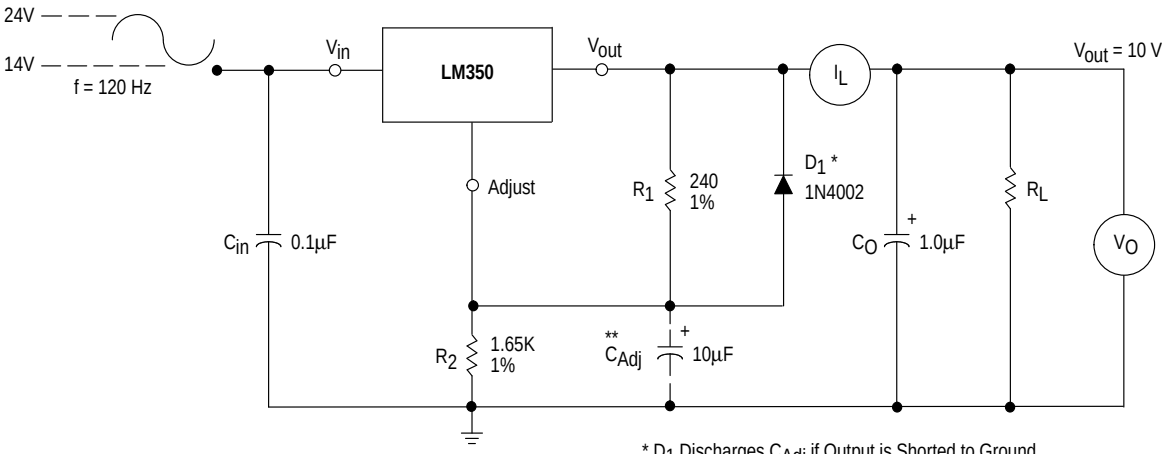

* D_1 Discharges C_{Adj} if Output is Shorted to Ground.
**C_{Adj} provides an AC ground to the adjust pin.

Figure 5. Load Regulation

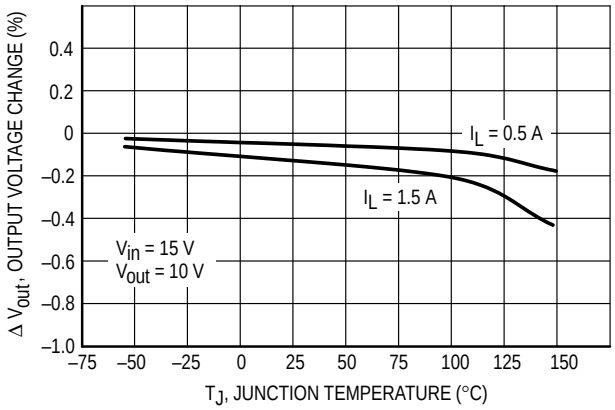

Figure 6. Current Limit

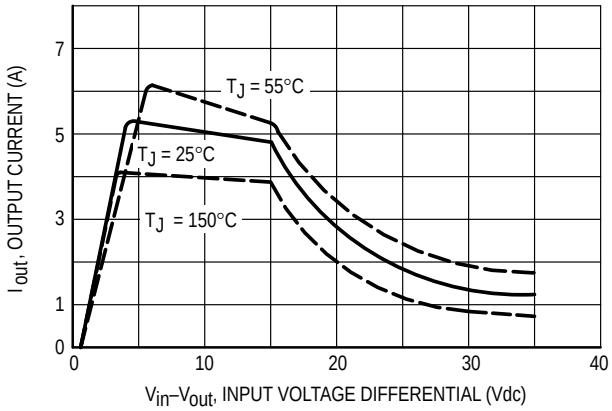

Figure 7. Adjustment Pin Current

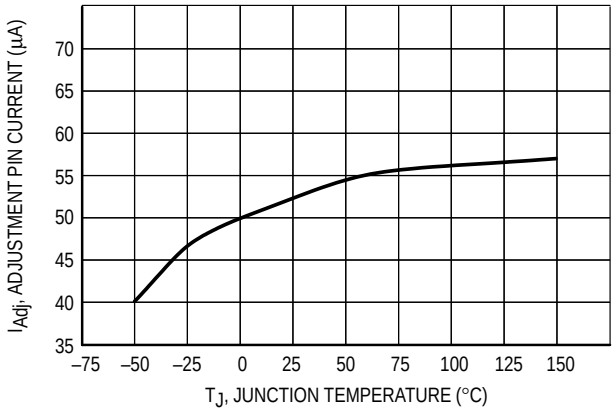

Figure 8. Dropout Voltage

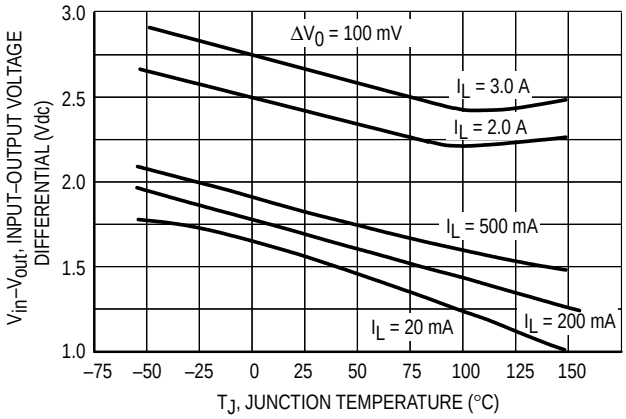

Figure 9. Temperature Stability

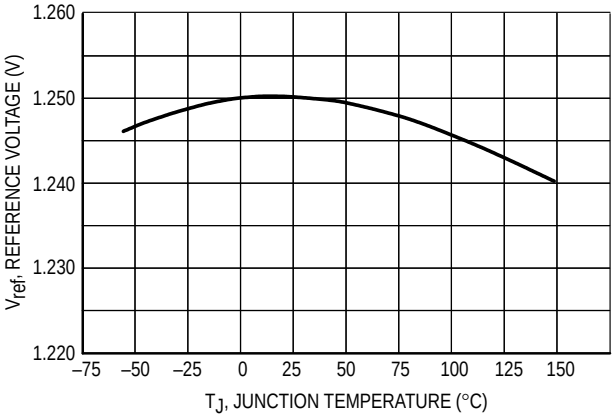

Figure 10. Minimum Operating Current

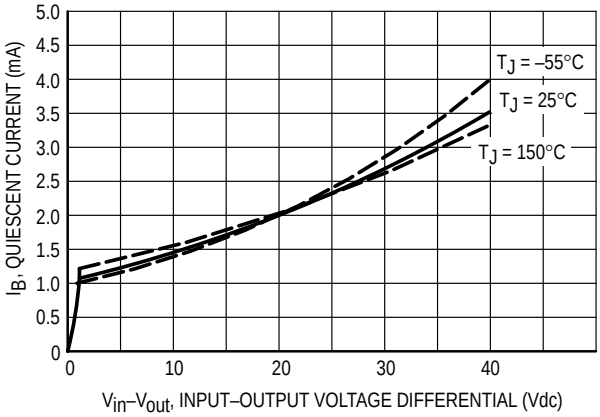

Figure 11. Ripple Rejection versus Output Voltage

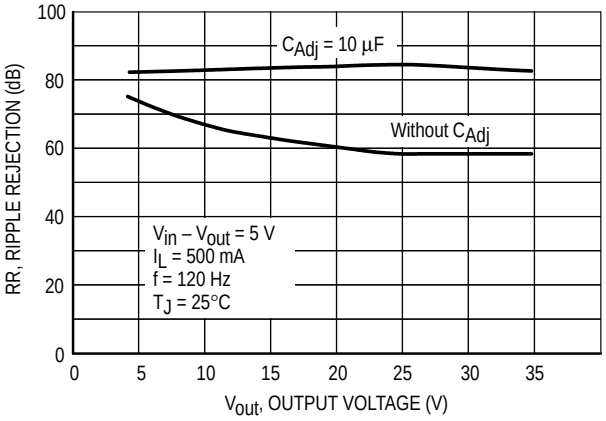

Figure 12. Ripple Rejection versus Output Current

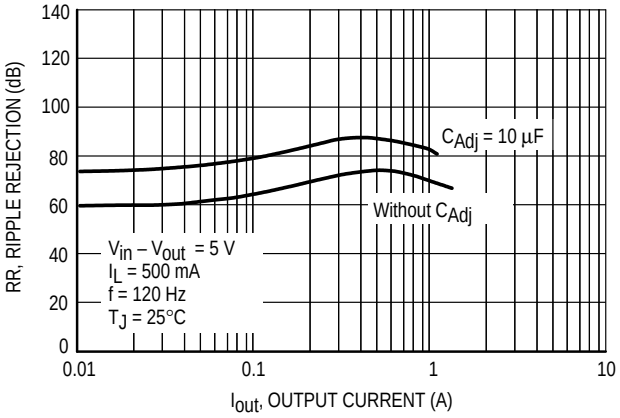

Figure 13. Ripple Rejection versus Frequency

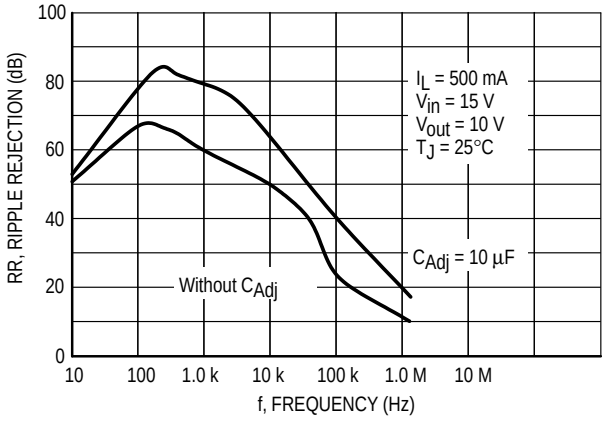

Figure 14. Output Impedance

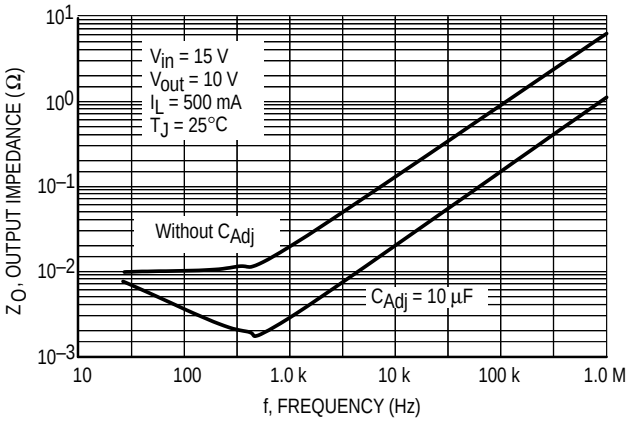

Figure 15. Line Transient Response

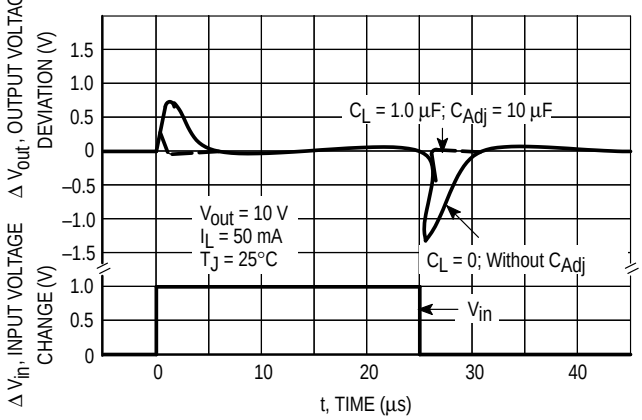

Figure 16. Load Transient Response

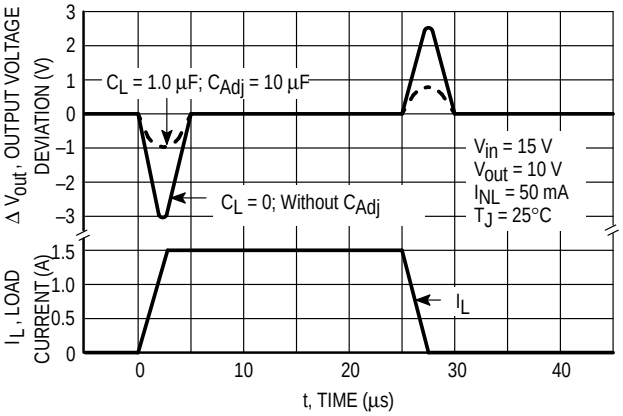

APPLICATIONS INFORMATION

Basic Circuit Operation

The LM350 is a three–terminal floating regulator. In operation, the LM350 develops and maintains a nominal 1.25 V reference (V_{ref}) between its output and adjustment terminals. This reference voltage is converted to a programming current (I_{PROG}) by R_1 (see Figure 17), and this constant current flows through R_2 to ground. The regulated output voltage is given by:

$$V_{out} = V_{ref}\left(1 + \frac{R_2}{R_1}\right) + I_{Adj} R_2$$

Since the current from the terminal (I_{Adj}) represents an error term in the equation, the LM350 was designed to control I_{Adj} to less than 100 μA and keep it constant. To do this, all quiescent operating current is returned to the output terminal. This imposes the requirement for a minimum load current. If the load current is less than this minimum, the output voltage will rise.

Since the LM350 is a floating regulator, it is only the voltage differential across the circuit which is important to performance, and operation at high voltages with respect to ground is possible.

Figure 17. Basic Circuit Configuration

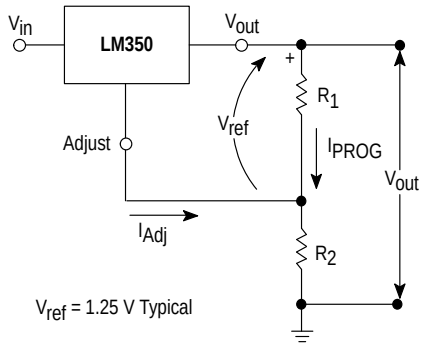

Load Regulation

The LM350 is capable of providing extremely good load regulation, but a few precautions are needed to obtain maximum performance. For best performance, the programming resistor (R_1) should be connected as close to the regulator as possible to minimize line drops which effectively appear in series with the reference, thereby degrading regulation. The ground end of R_2 can be returned near the load ground to provide remote ground sensing and improve load regulation.

External Capacitors

A 0.1 μF disc or 1 μF tantalum input bypass capacitor (C_{in}) is recommended to reduce the sensitivity to input line impedance.

The adjustment terminal may be bypassed to ground to improve ripple rejection. This capacitor (C_{Adj}) prevents ripple from being amplified as the output voltage is increased. A 10 μF capacitor should improve ripple rejection about 15 dB at 120 Hz in a 10 V application.

Although the LM350 is stable with no output capacitance, like any feedback circuit, certain values of external capacitance can cause excessive ringing. An output capacitance (C_O) in the form of a 1 μF tantalum or 25 μF aluminum electrolytic capacitor on the output swamps this effect and insures stability.

Protection Diodes

When external capacitors are used with any IC regulator, it is sometimes necessary to add protection diodes to prevent the capacitors from discharging through low current points into the regulator.

Figure 18 shows the LM350 with the recommended protection diodes for output voltages in excess of 25 V or high capacitance values (C_O > 25 μF, C_{Adj} > 10 μF). Diode D_1 prevents C_O from discharging thru the IC during an input short circuit. Diode D_2 protects against capacitor C_{Adj} discharging through the IC during an output short circuit. The combination of diodes D_1 and D_2 prevents C_{Adj} from discharging through the IC during an input short circuit.

Figure 18. Voltage Regulator with Protection Diodes

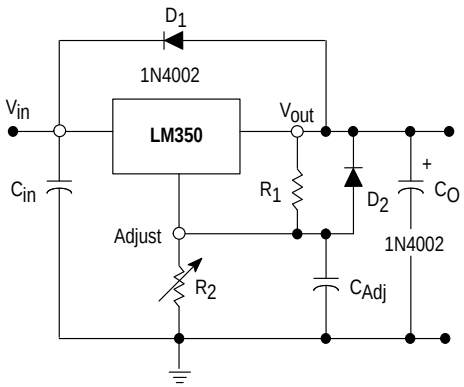

Figure 19. “Laboratory” Power Supply with Adjustable Current Limit and Output Voltage

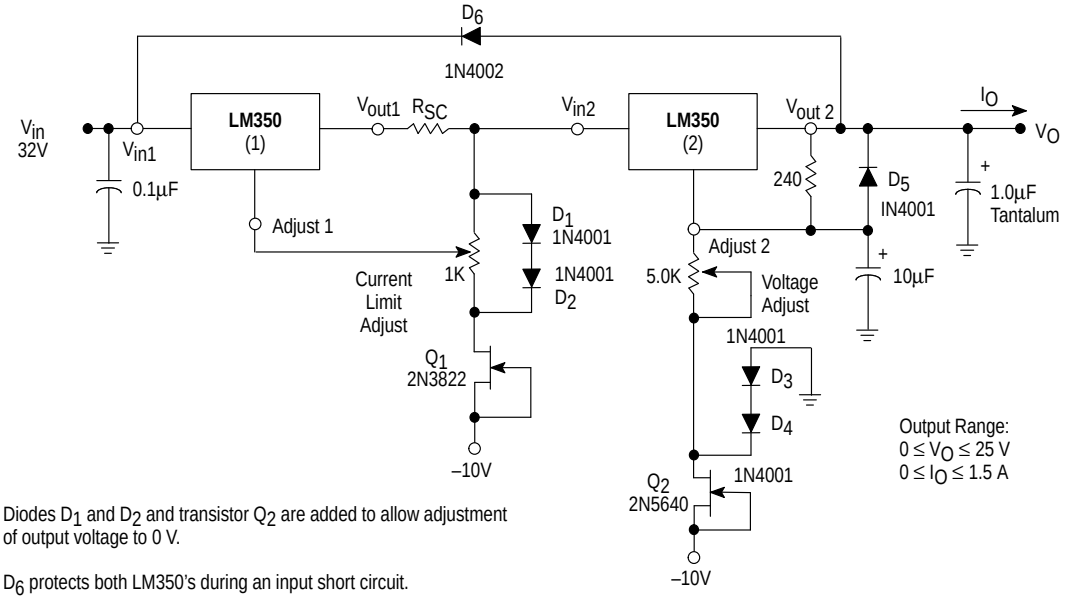

Diodes D_1 and D_2 and transistor Q_2 are added to allow adjustment of output voltage to 0 V.

D_6 protects both LM350’s during an input short circuit.

Figure 20. Adjustable Current Limiter

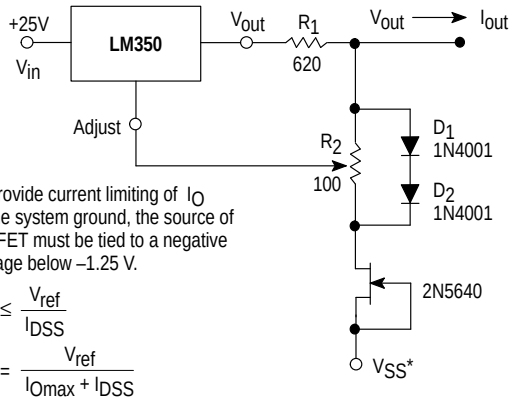

* To provide current limiting of I_O to the system ground, the source of the FET must be tied to a negative voltage below –1.25 V.

$$R_2 \le \frac{V_{ref}}{I_{DSS}}$$

$$R_1 = \frac{V_{ref}}{I_{Omax} + I_{DSS}}$$

$V_O < V_{(BR)DSS} + 1.25\ V + V_{SS}$
$I_{Lmin} - I_{DSS} < I_O < 3.0\ A$
As shown $O < I_O < 1.0\ A$

Figure 21. 5.0 V Electronic Shutdown Regulator

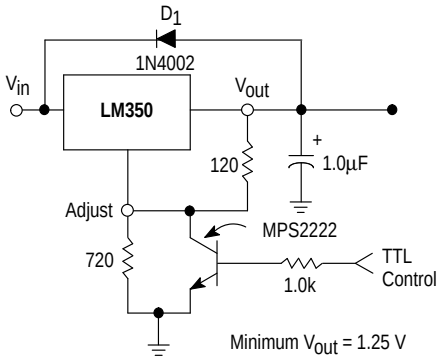

D_1 protects the device during an input short circuit.

Figure 22. Slow Turn–On Regulator

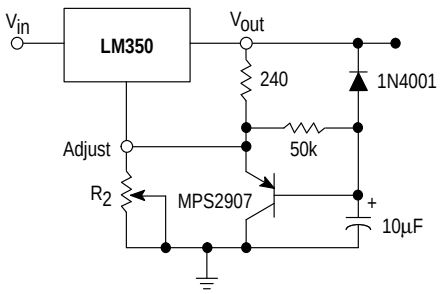

Figure 23. Current Regulator

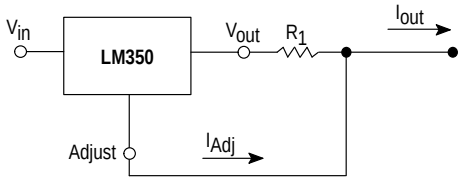

$$I_{out} = \left(\frac{V_{ref}}{R_1}\right) + I_{Adj}$$

$$\cong \frac{1.25\ V}{R_1}$$

$10\ mA \le I_{out} \le 3.0\ A$

OUTLINE DIMENSIONS

T SUFFIX
PLASTIC PACKAGE
CASE 221A–06
ISSUE Y

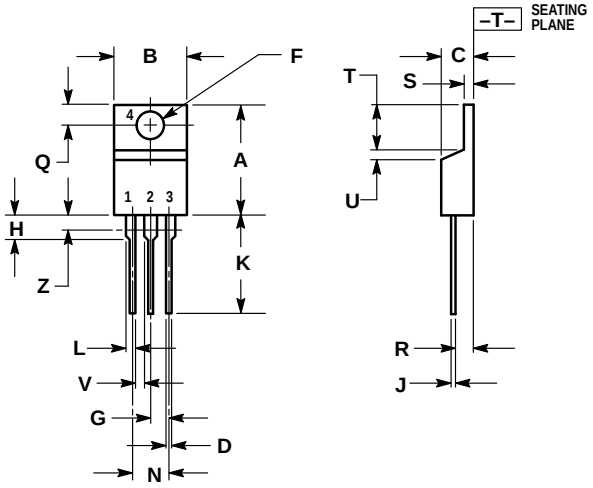

NOTES:
1. DIMENSIONING AND TOLERANCING PER ANSI Y14.5M, 1982.
2. CONTROLLING DIMENSION: INCH.
3. DIMENSION Z DEFINES A ZONE WHERE ALL BODY AND LEAD IRREGULARITIES ARE ALLOWED.

	INCHES		MILLIMETERS	
DIM	MIN	MAX	MIN	MAX
A	0.570	0.620	14.48	15.75
B	0.380	0.405	9.66	10.28
C	0.160	0.190	4.07	4.82
D	0.025	0.035	0.64	0.88
F	0.142	0.147	3.61	3.73
G	0.095	0.105	2.42	2.66
H	0.110	0.155	2.80	3.93
J	0.018	0.025	0.46	0.64
K	0.500	0.562	12.70	14.27
L	0.045	0.060	1.15	1.52
N	0.190	0.210	4.83	5.33
Q	0.100	0.120	2.54	3.04
R	0.080	0.110	2.04	2.79
S	0.045	0.055	1.15	1.39
T	0.235	0.255	5.97	6.47
U	0.000	0.050	0.00	1.27
V	0.045	—	1.15	—
Z	—	0.080	—	2.04

NOTES

NOTES

Motorola reserves the right to make changes without further notice to any products herein. Motorola makes no warranty, representation or guarantee regarding the suitability of its products for any particular purpose, nor does Motorola assume any liability arising out of the application or use of any product or circuit, and specifically disclaims any and all liability, including without limitation consequential or incidental damages. “Typical” parameters which may be provided in Motorola data sheets and/or specifications can and do vary in different applications and actual performance may vary over time. All operating parameters, including “Typicals” must be validated for each customer application by customer’s technical experts. Motorola does not convey any license under its patent rights nor the rights of others. Motorola products are not designed, intended, or authorized for use as components in systems intended for surgical implant into the body, or other applications intended to support or sustain life, or for any other application in which the failure of the Motorola product could create a situation where personal injury or death may occur. Should Buyer purchase or use Motorola products for any such unintended or unauthorized application, Buyer shall indemnify and hold Motorola and its officers, employees, subsidiaries, affiliates, and distributors harmless against all claims, costs, damages, and expenses, and reasonable attorney fees arising out of, directly or indirectly, any claim of personal injury or death associated with such unintended or unauthorized use, even if such claim alleges that Motorola was negligent regarding the design or manufacture of the part. Motorola and Ⓜ are registered trademarks of Motorola, Inc. Motorola, Inc. is an Equal Opportunity/Affirmative Action Employer.

How to reach us:
USA / EUROPE / Locations Not Listed: Motorola Literature Distribution;
P.O. Box 20912; Phoenix, Arizona 85036. 1–800–441–2447 or 602–303–5454

MFAX: RMFAX0@email.sps.mot.com – TOUCHTONE 602–244–6609
INTERNET: http://Design–NET.com

JAPAN: Nippon Motorola Ltd.; Tatsumi–SPD–JLDC, 6F Seibu–Butsuryu–Center,
3–14–2 Tatsumi Koto–Ku, Tokyo 135, Japan. 03–81–3521–8315

ASIA / PACIFIC: Motorola Semiconductors H.K. Ltd.; 8B Tai Ping Industrial Park,
51 Ting Kok Road, Tai Po, N.T., Hong Kong. 852–26629298

NTC Thermistors

APPLICATIONS

AUTOMOTIVE APPLICATIONS

NTC temperature sensors are widely used in motor vehicles. For example:

- Inlet air-temperature control
- Transmission oil temperature control
- Engine temperature control
- Airco systems
- Airbag electronic systems
- Temperature detection of laser diode in CD players for cars
- Frost sensors
- ABS
- BMS / charge plugs protection

DOMESTIC APPLIANCES

NTC temperature sensors are in virtually all equipment in the home where temperature plays a role. This includes:

- Fridges and freezers
- Cookers and deep-fat fryers
- Washing machines and dish washers
- Central-heating systems
- Air conditioning

INDUSTRIAL, TELECOMMUNICATIONS, CONSUMER

In switching, measuring and detection systems

- Process control
- Heating and ventilation
- Air conditioning
- Fire alarms
- Temperature protection in battery management / charging systems
- LCD contrast control in flat-panel displays, mobile phones and camcorders
- Temperature compensation of quartz oscillator frequency in, for example, mobile phones
- Ink-jet printer head temperature detection
- Video and audio equipment
- LED control circuits

SELECTION CHART

PRODUCT RANGE	OPERATING TEMP. RANGE (°C)	TOL. ON *R* (± %) OR ON T (± °C)	B TOL. (± %)	RESP. TIME (s)	MAX. Ø (mm)	LEAD		DOCUMENT NUMBER
						Ø (mm)	L (mm)	
Accuracy line								
NTCLE203E3	-40 to +125	(1 , 2, 3, 5) %	0.5 to 2.5	1.7	3.4	0.4	38 min.	29048
NTCLE100E3	-40 to +125	(2, 3, 5) %	0.5 to 3.0	1.2	3.8	0.6	17 min.	29049
NTCLE101E3...SB0	-40 to +125	0.5 °C	two-point sensors	1.2	3.3	0.6	17 min.	29046
NTCLE203E3...SB0	-55 to +150	0.5 °C	two-point sensors	1.7	4.2	0.5	41	29118
SMD versions								
NTCS0603E3	-40 to +150	(1, 2, 3, 5) %	1	-	-	-	-	29056
NTCS0402E3	-40 to +150	(1, 2, 3, 5) %	3	-	-	-	-	29003
NTCS0805E3	-40 to +150	(1, 2, 3, 5) %	1	-	-	-	-	29044
NTCS....E3...SMT	-40 to +125	1 %	1	-	-	-	-	29151

For technical questions, contact: nlr@vishay.com
THIS DOCUMENT IS SUBJECT TO CHANGE WITHOUT NOTICE. THE PRODUCTS DESCRIBED HEREIN AND THIS DOCUMENT ARE SUBJECT TO SPECIFIC DISCLAIMERS, SET FORTH AT www.vishay.com/doc?91000

NTC Thermistors

SELECTION CHART								
PRODUCT RANGE	OPERATING TEMP. RANGE (°C)	TOL. ON *R* (± %) OR ON T (± °C)	B TOL. (± %)	RESP. TIME (s)	MAX. Ø (mm)	LEAD		DOCUMENT NUMBER
						Ø (mm)	L (mm)	
Wire bondable die								
NTCC200 / NTCC300	-55 to +175	(1, 2, 3, 5) %	1	-	-	-	-	29153
Miniature accuracy line								
NTCLE300E3	-40 to +125	0.5 °C	1.2	1.2	2.4	AWG30	38	29051
NTCLE201E3	-40 to +125	0.5 °C	1.2	1.3	2.4	0.3	38	29051
NTCLE305E4	-40 to +125	0.5 °C	0.5 to 1	0.7	1.6	AWG32	41	29076
NTCLE413 / NTCLE428	-40 to +105	(1, 2, 3, 5) %	0.5 to 1.5	2.5	3	AWG30	40	29078
High temperature								
NTCSMELFE3	-40 to +150	5 %	1.3	0.9	1.7	-	-	29119
NTCLG100E2	-40 to +300	5 %	1.3	0.9	1.85	0.56 max.	25.4 min.	29050
Special long-leaded (UL 2468 PVC insulation)								
NTCLS100E3	-40 to +85	3 %	0.75 to 3	15	8	AWG24	400	29060
NTCLP100E3	-40 to +85	3 %	0.75 to 3	10	6	AWG24	400	29060
NTCLE400E3	-40 to +85	3 %	0.75 to 3	7	6	AWG24	400	29060
Ring tongue sensors								
NTCALUG02 series	-55 to +125	(1, 2) %	0.5	5	8.5	AWG32	45	29094
NTCALUG03 series	-40 to +125	(2, 3) %	0.5 to 1.5	5	5.5	AWG32	70	29114
NTCALUG01 series	-40 to +150	5 %	0.5	7.5	7.1	AWG24	38	29092
NTCALUG01T	-40 to +150 (long term)	2 %	0.5	7.5	7.1	AWG264	150	29164

Note

- A lot of application dedicated sensors NTCA (cap types, immersion types, screw types,…) are also proposed: the list is too long to be presented here. Please refer to www.vishay.com/thermistors/ntc

RANGE SUMMARY

ACCURACY LINE

NTCLE203E3 and NTCLE100E3

The flagship of our ranges. The accuracy Line sensors offer real value for money. They have low tolerances (as low as ± 1 % on the R_{25}-value and ± 0.5 % on the B-value) and an operating temperature range from -40 °C to +125 °C. In addition, they are very stable over a long life.

SURFACE-MOUNT TEMPERATURE SENSORS

NTCS0402, NTCS0603 and NTCS0805 series

Our surface mount NTC sensors for temperature sensing and compensation embody all the qualities of Vishay BCcomponents NTC technology. The sensors come in a full range of R_{25}-values from 2 kΩ to 680 kΩ with standard tolerances from 1 % to 5 %.

If special stability criteria are of application, our special series NTCS……SMT (1 R_{25} value per case) is highly recommended.

HIGH TEMPERATURE SENSORS

NTCSMELFE3 and NTCLG100E2

This range of high-quality glass-encapsulated NTC temperature sensors are price-competitive for general use. Not only can the leaded sensor be used at up to 300 °C, but their glass encapsulation makes them ideal for use in corrosive atmospheres and harsh environments. This makes them an attractive alternative to other more expensive sensing methods. Two types of small glass envelopes are available: SOD 27 for sensors with leads, and SOD 80 ('MELF' execution) for leadless, surface-mount sensors.

NTCSMELF and NTCLG are not recommended for automotive though.

AUTOMOTIVE SENSORS

NTCLE203E3...SB0

These components are designed for all automotive applications (especially ECT sensors). Their coating is withstanding harsh potting conditions. These components are compliant to the AEC-Q200 norm.

For technical questions, contact: nlr@vishay.com
THIS DOCUMENT IS SUBJECT TO CHANGE WITHOUT NOTICE. THE PRODUCTS DESCRIBED HEREIN AND THIS DOCUMENT ARE SUBJECT TO SPECIFIC DISCLAIMERS, SET FORTH AT www.vishay.com/doc?91000

NTC Thermistors

MINIATURE CHIP ACCURACY LINE

NTCLE201E3
NTCLE300E3
NTCLE305E4

These sensors combine the features of the accuracy line with non-insulated or insulated leads for remote sensing applications.

SPECIAL LONG-LEADED SENSORS

NTCLS100E3
NTCLP100E3
NTCLE400E3

For special applications we can supply three types of long-leaded sensors: water-resistant sensors for use in humid conditions, pipe sensors for use in corrosive atmospheres and epoxy-coated sensors for general use.

SURFACE TEMPERATURE SENSORS

NTCALUG01
NTCALUG01T
NTCALUG02
NTCALUG03

NTCALUG02 and NTCALUG03 measure surface temperature with small gradients (difference between surface and NTC element temperature) due to low thermal conductivity of the nickel wire.

NTCALUG01T is a rugged product developed to withstand temperatures as high as 150 °C during thousands of hours without any wear out sign (no insulation resistance loss).

HOW NTC TEMPERATURE SENSORS WORK

NTC temperature sensors are made from a mixture of metal oxides which are subjected to a sintering process that gives them a negative electrical resistance versus temperature (*R*/T) relationship such as that shown in Fig. 1.

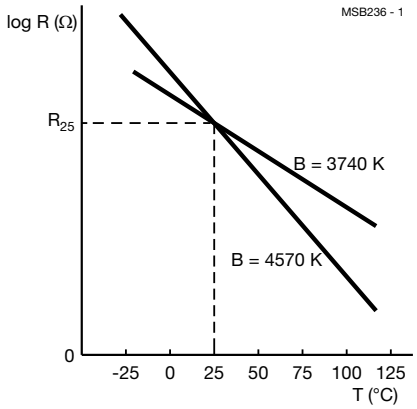

Fig. 1 - Typical resistance as a function of temperature for an NTC temperature sensor

The relatively large negative slope means that even small temperature changes cause a significant change in electrical resistance which makes the NTC sensor ideal for accurate temperature measurement and control.

The main electrical characteristics of an NTC ceramic temperature sensor are expressed by three important parameters and their tolerances (see below).

IMPORTANT NTC PARAMETERS	
PARAMETER	**DESCRIPTION**
R_{25}	The resistance of the sensor in Ω at the reference temperature of 25 °C
B-value	A material constant, expressed in Kelvin
α	The temperature coefficient of resistance expressed in %/K or in %/°C

RESISTANCE R_{25} AT 25 °C (298.15 K)

The resistance at 25 °C (substantially at room temperature) provides a convenient reference point for thermistors. Tolerances on R_{25} are due mainly to variations in ceramic material manufacture and tolerances on chip dimensions. Through the use of highly homogeneous material compositions and proprietary ceramic sawing techniques allowing precise control of chip dimensions, products are available with tolerances on R_{25} lower than 1 %.

For technical questions, contact: nlr@vishay.com
THIS DOCUMENT IS SUBJECT TO CHANGE WITHOUT NOTICE. THE PRODUCTS DESCRIBED HEREIN AND THIS DOCUMENT ARE SUBJECT TO SPECIFIC DISCLAIMERS, SET FORTH AT www.vishay.com/doc?91000

NTC Thermistors

MATERIAL CONSTANT B

B is a material constant that controls the slope of the R_T characteristic (see Fig. 1) which can, at least to a first approximation, be represented by the formula:

$$R_T = R_{25}\exp\left\{B\left(\frac{1}{T} - \frac{1}{298.15}\right)\right\} \quad (1)$$

Where T is the absolute temperature of the sensor.

In practice, B varies somewhat with temperature and is therefore defined between two temperatures 25 °C and 85 °C by the formula:

$$B_{25/85} = \ln\left(\frac{R_{85}}{R_{25}}\right) \Big/ \left(\frac{1}{358.15} - \frac{1}{298.15}\right) \quad (2)$$

$B_{25/85}$ (expressed in K) is normally used to characterize and compare different ceramics. Tolerance on B (or $B_{25/85}$) is caused mainly by material composition tolerances and sintering conditions. The latest materials offer tolerances as low as ± 0.3 % on some specific $B_{25/85}$ values.
In most cases, better fitting curves than pure exponential are required to measure the temperature accurately; see formula (1). That is why each NTC material curve is defined by a 3rd order polynominal, as shown below:

$$R_T = R_{25}\exp[A + B/T + C/T^2 + D/T^3] \quad (3)$$

or inversely expressing T as a function of R_T:

$$T = \frac{1}{\left[A_1 + B_1\ln\left(\frac{R_T}{R_{25}}\right) + C_1\ln^2\left(\frac{R_T}{R_{25}}\right) + D_1\ln^3\left(\frac{R_T}{R_{25}}\right)\right]} \quad (4)$$

The two approximations (3) and (4) represent the real material curves with an error smaller than 0.1 % at any given temperature.
The values of the coefficients A, B, C, D, A_1, B_1, C_1 and D_1 are given in some datasheets as NTCLE100E3 and in the *R*-T computation sheets, which can be downloaded from the website:
www.vishay.com/thermistors/curve-computation-list

SENSOR TOLERANCES

The total tolerances of the NTC sensor over its operating temperature range is a combination of the tolerances on R_{25} and on B-value given by the formula:

$$\frac{\Delta R}{R} = \frac{\Delta R_{25}}{R_{25}} + \Delta B\left|\frac{1}{T} - \frac{1}{298.15}\right| \quad (5)$$

Fig. 2 is a graphical representation of this formula which shows a minimum at 25 °C since this is the temperature at which the sensor is calibrated. Above and below this temperature, the tolerances increase due to the increasing tolerances on B-value, giving the graph a "butterfly" shape.

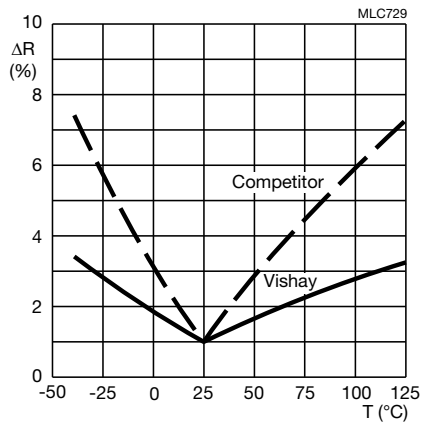

Fig. 2 - Typical resistance change as a function of temperature for a 1 % Vishay NTC temperature sensor compared to a 1 % sensor with a higher B-tolerance

The exceptionally low ΔB-value of the Vishay BCcomponents sensor compared with those of typical competitors (see Fig. 2) gives a flatter Δ*R*/*R* "butterfly" curve which means you can get more accurate temperature measurements using Vishay BCcomponents NTC temperature sensors.

For technical questions, contact: nlr@vishay.com
THIS DOCUMENT IS SUBJECT TO CHANGE WITHOUT NOTICE. THE PRODUCTS DESCRIBED HEREIN AND THIS DOCUMENT ARE SUBJECT TO SPECIFIC DISCLAIMERS, SET FORTH AT www.vishay.com/doc?91000

NTC Thermistors

TEMPERATURE COEFFICIENT OF RESISTANCE

The temperature coefficient of resistance α expresses the sensitivity of a sensor to temperature changes. It is defined as:

$$\alpha = \frac{1}{R} \times \frac{\Delta R}{\Delta T} \quad (6)$$

Using formula to eliminate R this can be re-expressed as:

$$\alpha = \frac{\Delta B}{T^2} \quad (7)$$

Which means that the relative tolerance on α is equal to the relative tolerance on B-value.

THERMAL STABILITY

The stability of an NTC temperature sensor is expressed in terms of the maximum shift in its electrical properties, R_{25} and B-values after it has been subjected to an extended period at its limit operating conditions. Fig. 3, for example, shows the long-term deviation of R_{25} and B-value for a standard lacquered component from the NTCLE100E3 series with an R_{25} of 10 kΩ.

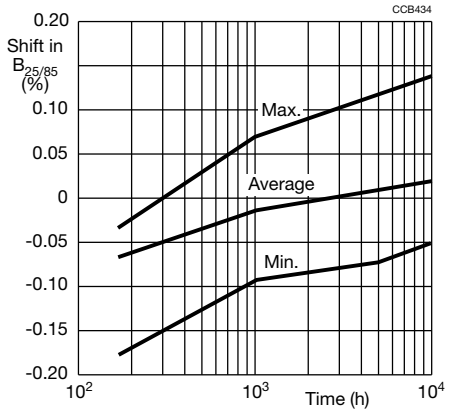

Fig. 3 - Aging characteristics (dry heat at 150 °C of a NTCLE100E3 series NTC temperature sensor with an R_{25} of 10 kΩ

TEMPERATURE CYCLING

Another important criterion for assessing the performance of an NTC sensor throughout its operational life is its resistance to thermal cycling. To assess this, products are subjected to rapid temperature variations covering the extremes over which they are expected to operate until failure is induced.

These tests fully demonstrate the high reliability of our products: our soldered types (for example NTCLE300E3 types) withstanding more than 5000 cycles, and our glass encapsulated types (NTCLG100E2) more than 100 000 cycles without failure.

THERMAL TIME CONSTANT AND RESPONSE TIME

The speed of response of an NTC sensor is characterized by its time constant. This is the time for the sensor's temperature to change by 63.2 % (i.e. 1 to 1/e) of the total change that occurs when the sensor is subjected to a very rapid change in temperature.

The conditions under which the time constant is measured are important. Two are normally considered:

- Ambient change: the component is initially in still air at 25 °C. Then quickly immersed in a fluid at 85 °C. The fluid is usually silicone oil but other fluids, e.g. water for washing machine applications, air for tumble dryers can also be specified.
- Power-on / power-off conditions: the component is heated by applying electrical power in still air to an equivalent temperature of 85 °C after which electrical power is removed and cool-down time is measured at 63.2 % of the temperature difference.

Fig. 4 represents the typical voltage drop variation over a boiler sensor experiencing a transition from air at 25 °C to the temperature of boiling water. The graph shows a response time of about 4 s when the measured voltage corresponds to an equivalent temperature of 72.4 °C.

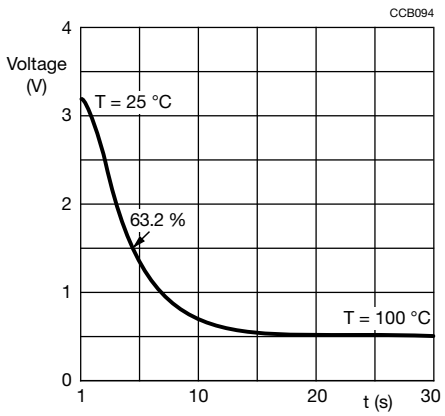

Fig. 4 - Typical output of a boiler sensor undergoing a sudden temperature transition from 25 °C to 100 °C

ADVANCED DEVELOPMENT AND HIGH-TECHNOLOGY MANUFACTURE

The high accuracy of our NTC temperature sensor series is principally a result of advanced development and high-technology manufacture.

For technical questions, contact: nlr@vishay.com
THIS DOCUMENT IS SUBJECT TO CHANGE WITHOUT NOTICE. THE PRODUCTS DESCRIBED HEREIN AND THIS DOCUMENT ARE SUBJECT TO SPECIFIC DISCLAIMERS, SET FORTH AT www.vishay.com/doc?91000