05EMS0200 - Energy Meter Sensor Board (Cloosed Loop)

Current Sensor STB-LA/Z

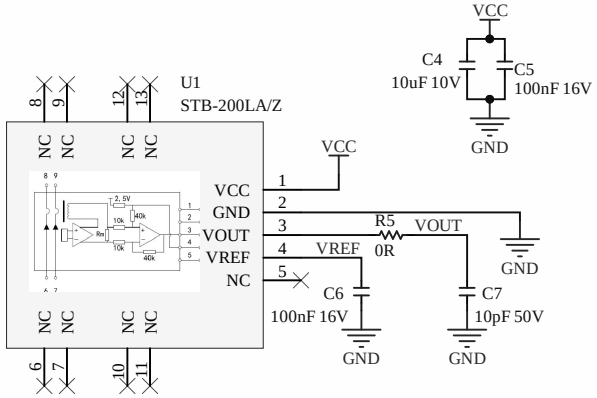

Analog Front End

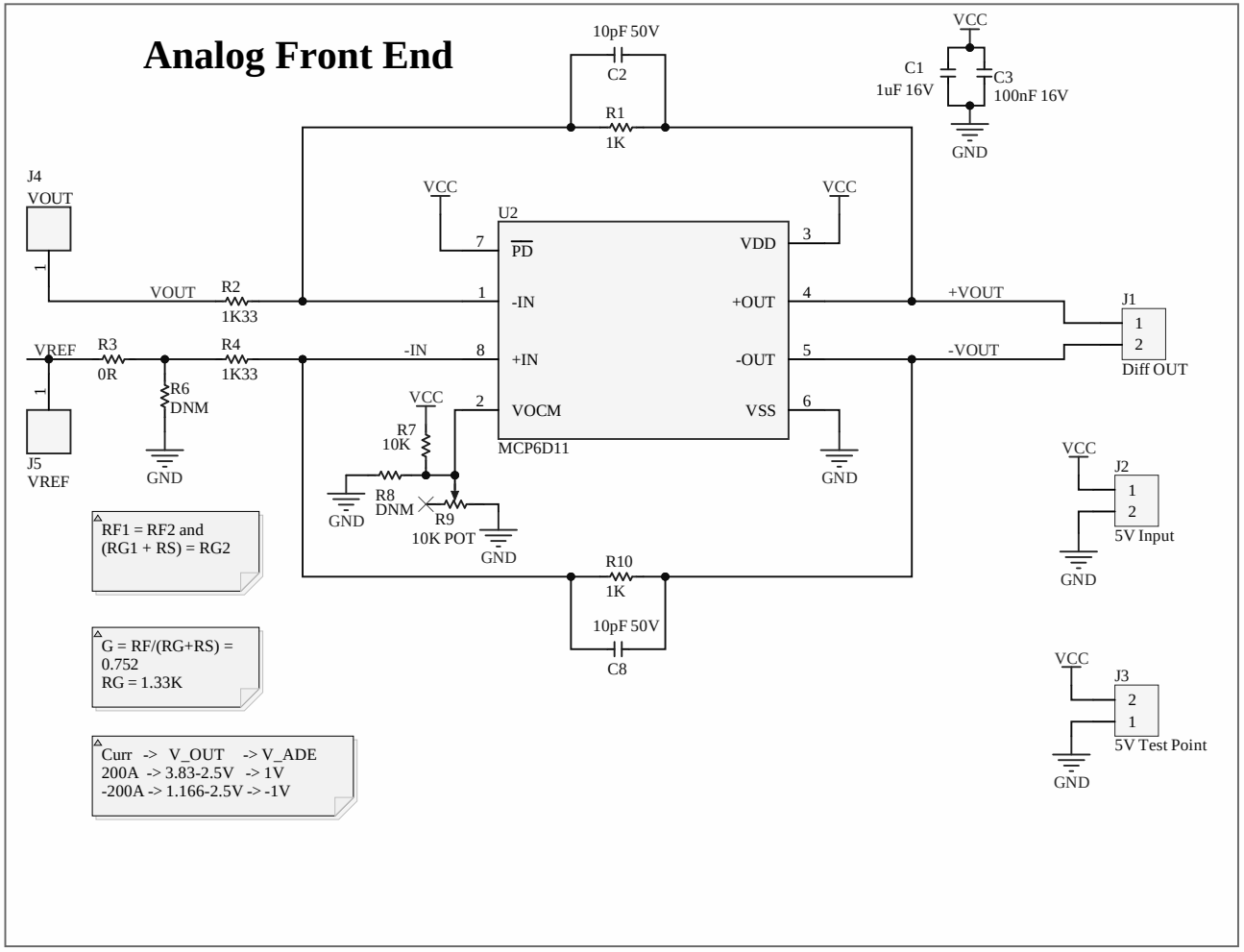

RF1 = RF2 and
(RG1 + RS) = RG2

G = RF/(RG+RS) =
0.752
RG = 1.33K

Curr -> V_OUT -> V_ADE
200A -> 3.83-2.5V -> 1V
-200A -> 1.166-2.5V -> -1V

Document: *05EMS0200 Closed Loop Main*	Engineer: Luis Paula	14-01-2022	
	Verified: Marco Martins		
	Last Mod: Luis Paula	28-03-2022	
INL- International Iberian Nanotechnology Laboratory *Avenida Mestre José Veiga s/n* *4715-330 Braga* *Portugal*	File: 05EMS0200_Main.SchDoc Project: 05EMS0200_Closed.PrjPcb		
	Date: 28-03-2022 09:08:14	Sheet 1 of 1	Size A4 / Rev 1.0