CPC464 CABINET DRAWING

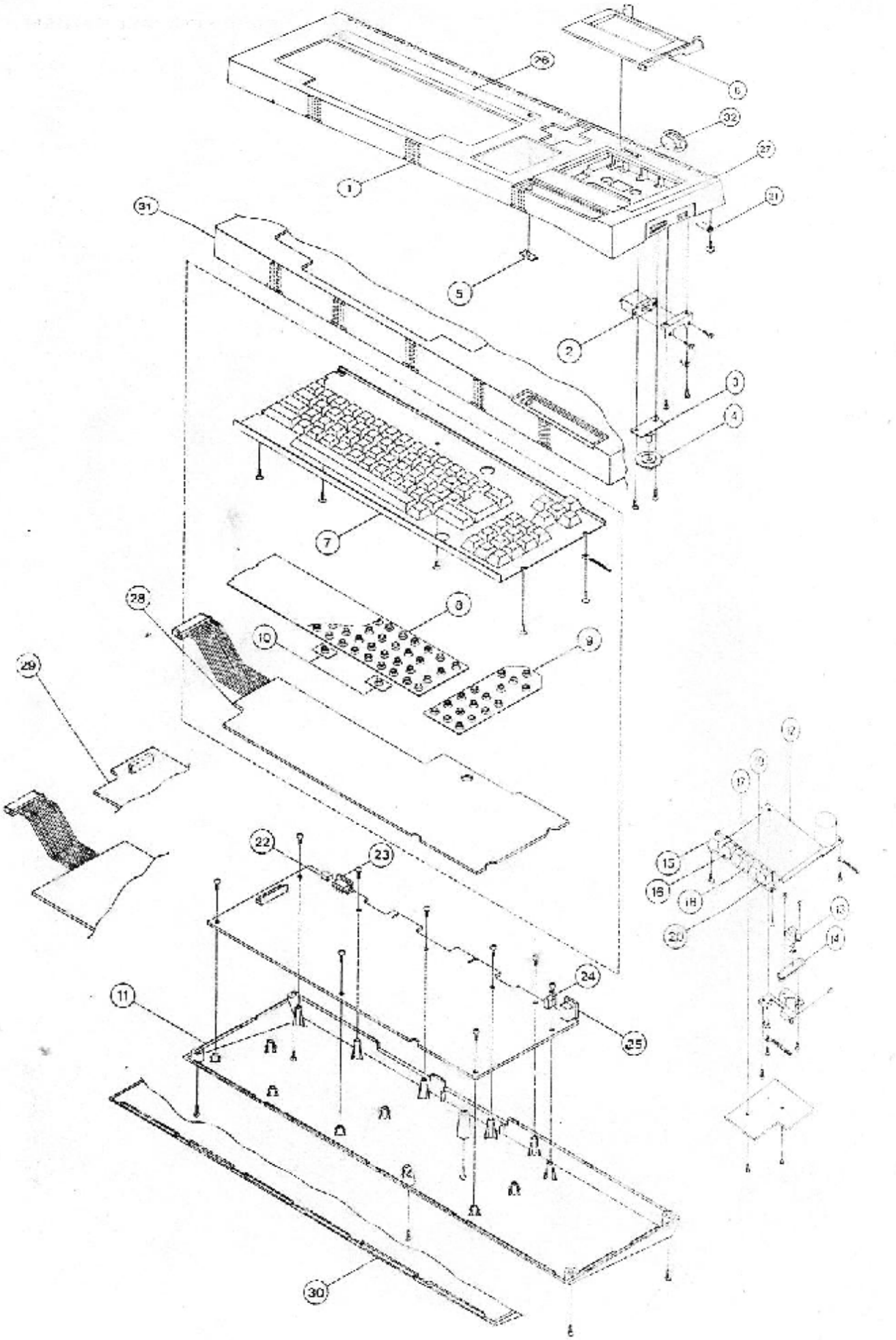

CASSETTE MECHANISM

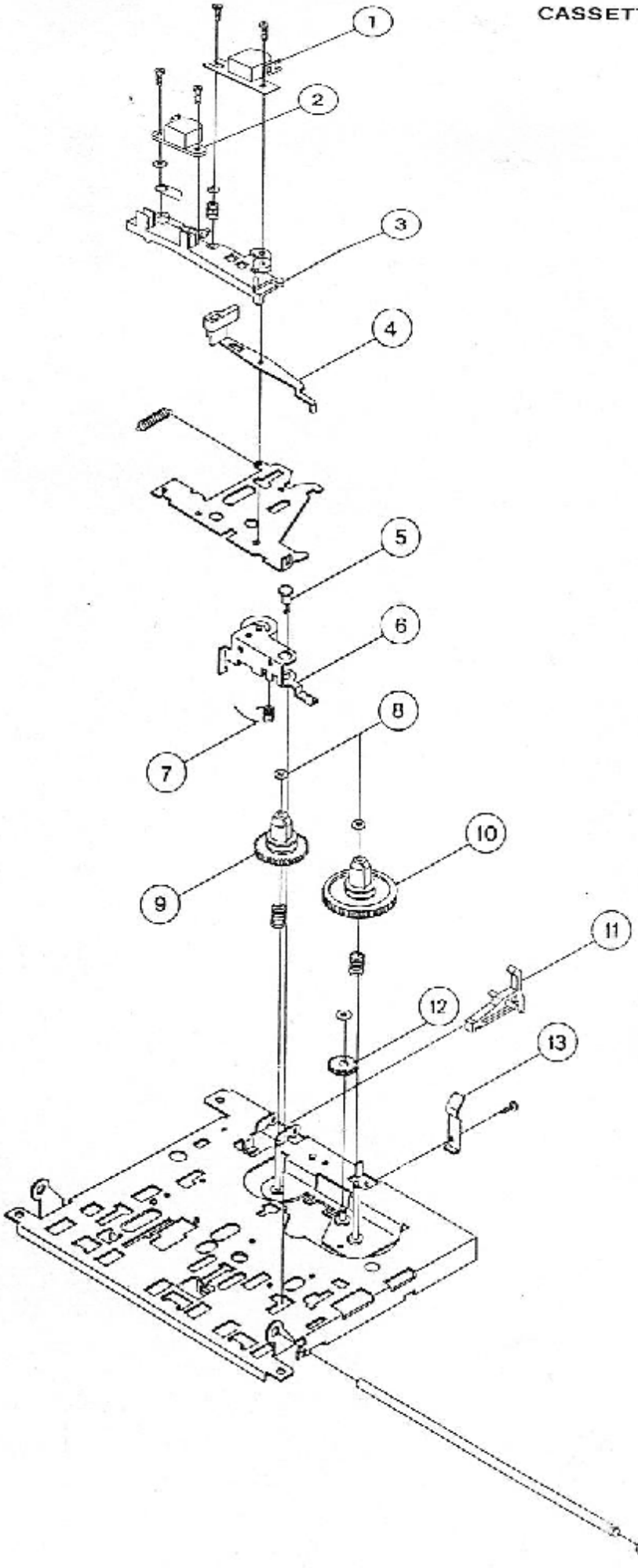

CASSETTE MECHANISM

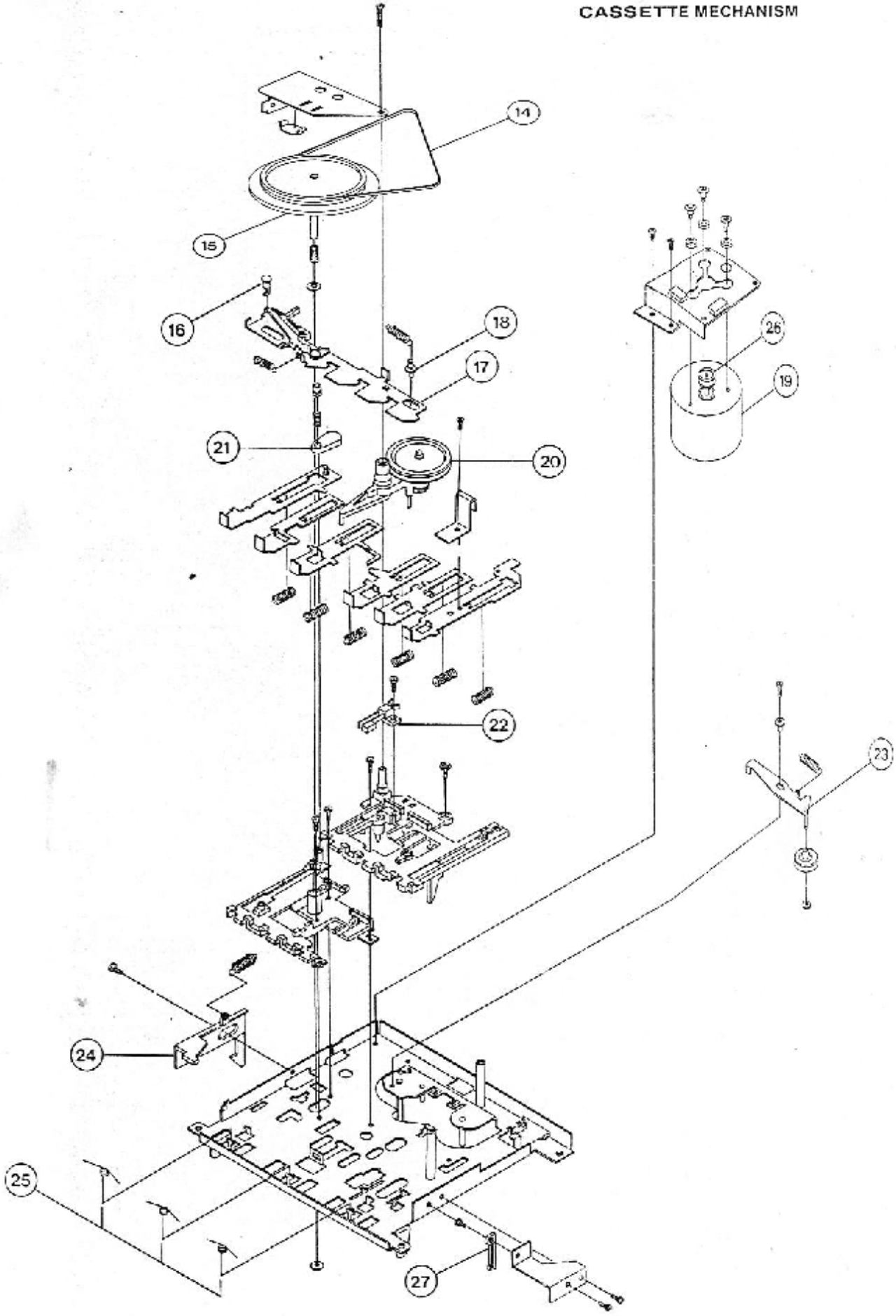

CPC464 CASSETTE MECHANISM PARTS LIST

Sym	Description	Part No.
1.	R/P Head	170201
2.	Erase Head	170202
3	Head Base	809170
4.	Auto Stop Arm	809171
5	Stopper	809172
6	Pinch Roller Assembly	809162
7	Spring Pinch Roller	809161
8.	Fibre Washer	809175
9	Rewind Spool	809160
10	Take Up Spool	809159
11	Record Safety Lever	809158
12	Idler Gear	809173
13	Back Up Spring	170203
14	Main Belt	170204
15	Flywheel	809156
16	Locking Plate Stopper	170205
17	Locking Plate	170206
18	Spring Post Locking Plate	170207
19	Motor	170208
20	Idler Assembly	809155
21	Pause Lock Plate	809168
22	Leaf Switch	809157
23	F.F. Idler Arm Assembly	809152
24	Eject Lever Cassette Door	170209
25	Spring Cassette Buttons	170210
26	Motor Pulley	170211
27	Leaf Switch	170212

CASSETTE DECK ALIGNMENT INSTRUCTIONS

To check cassette module independently of the C.P.U. connect 5V DC across points B(–) and C(+), and link E to G and H to F. The cassette will then operate in an audio mode.

(See page 8 – Cassette Circuit Diagram)

Equipment Required: Frequency Counter, A.V.O., V.T.V.M., Oscilloscope & Test Tape.

STEP	FUNCTION	SIGNAL IN	SIGNAL OUT	METHOD	REMARKS
1.	Cassette Azimuth Adjustment.		Monitor V.T.V.M.	1) Insert Test Tape recorded at 6kHz constant. 2) Set Volume to maximum on CPC464. 3) Connect V.T.V.M. to Pin 7 of I.C.302 to read between 330mV to 520mV. By adjusting azimuth screw on the cassette head.	Monitor switched on and fix connections.
2.	Speed Check.	Put the standard tape in the cassette mechanism.	Monitor Oscilloscope.	Check output from the tape on the oscilloscope. The range to be used is 100uS.	Speed variation ±4% will not affect software loading.

CPC464 CASSETTE PCB

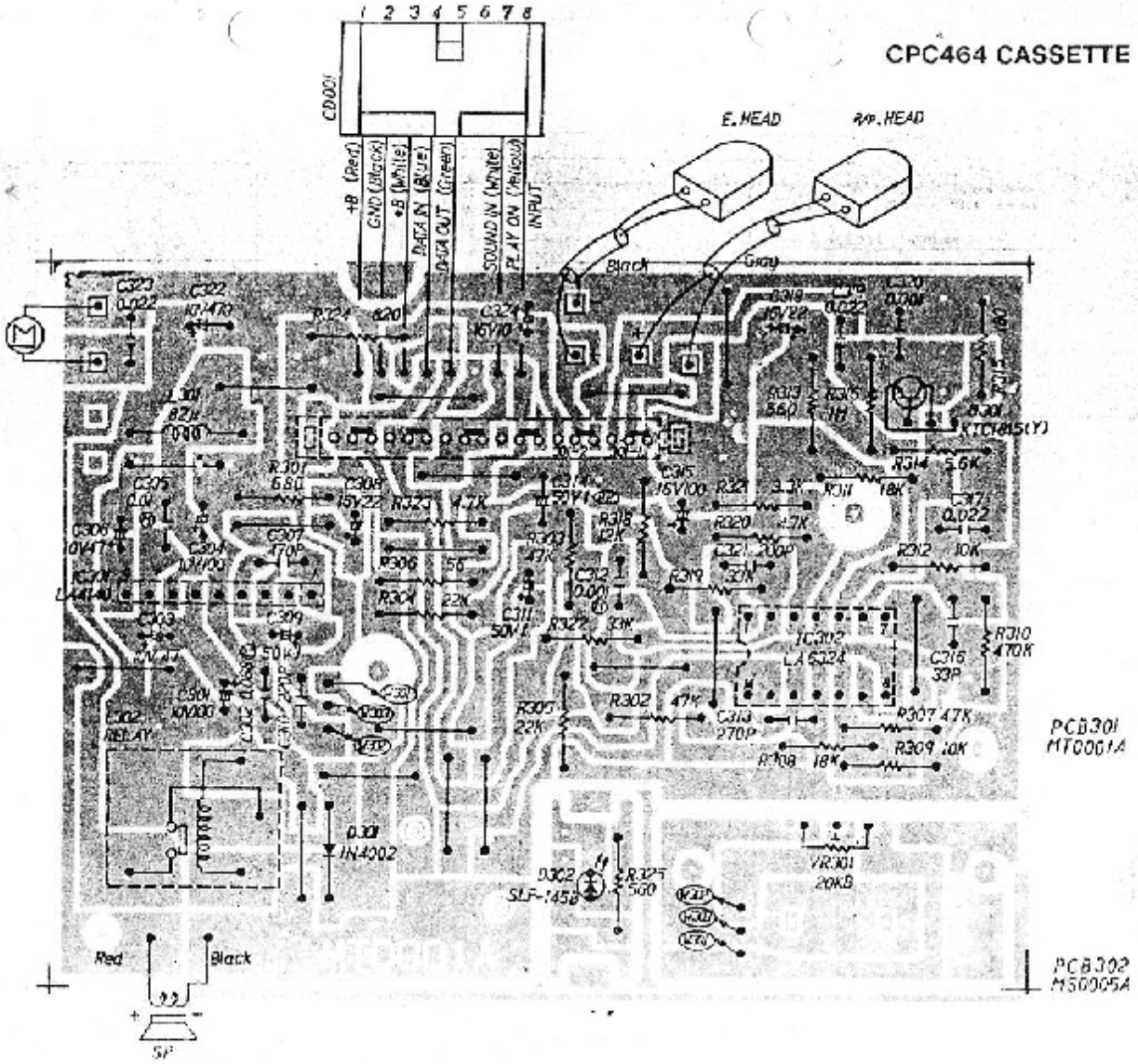

CPC464 CASSETTE DECK CIRCUIT DIAGRAM

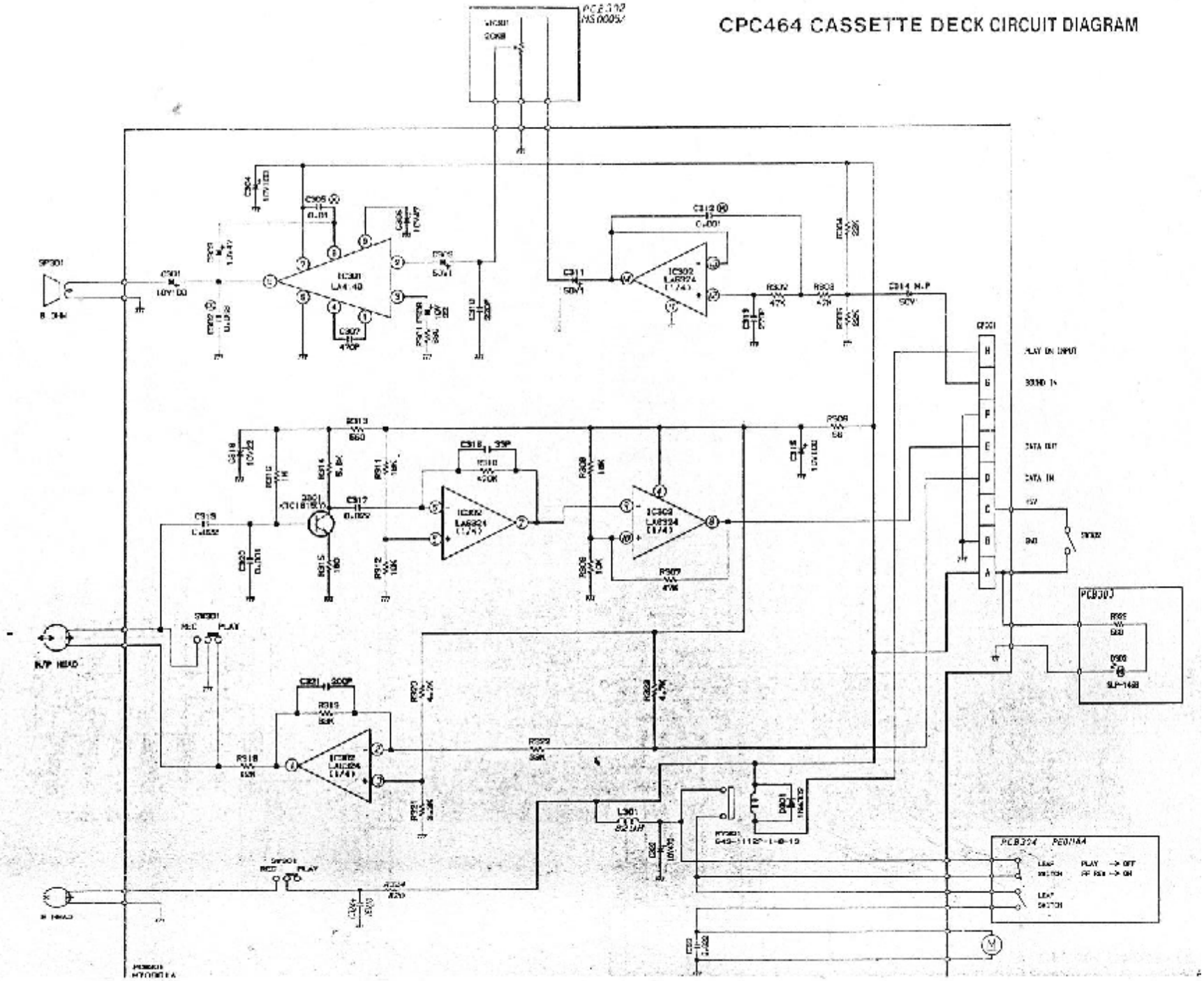

CPC464 - BASIC HARDWARE ANALYSIS

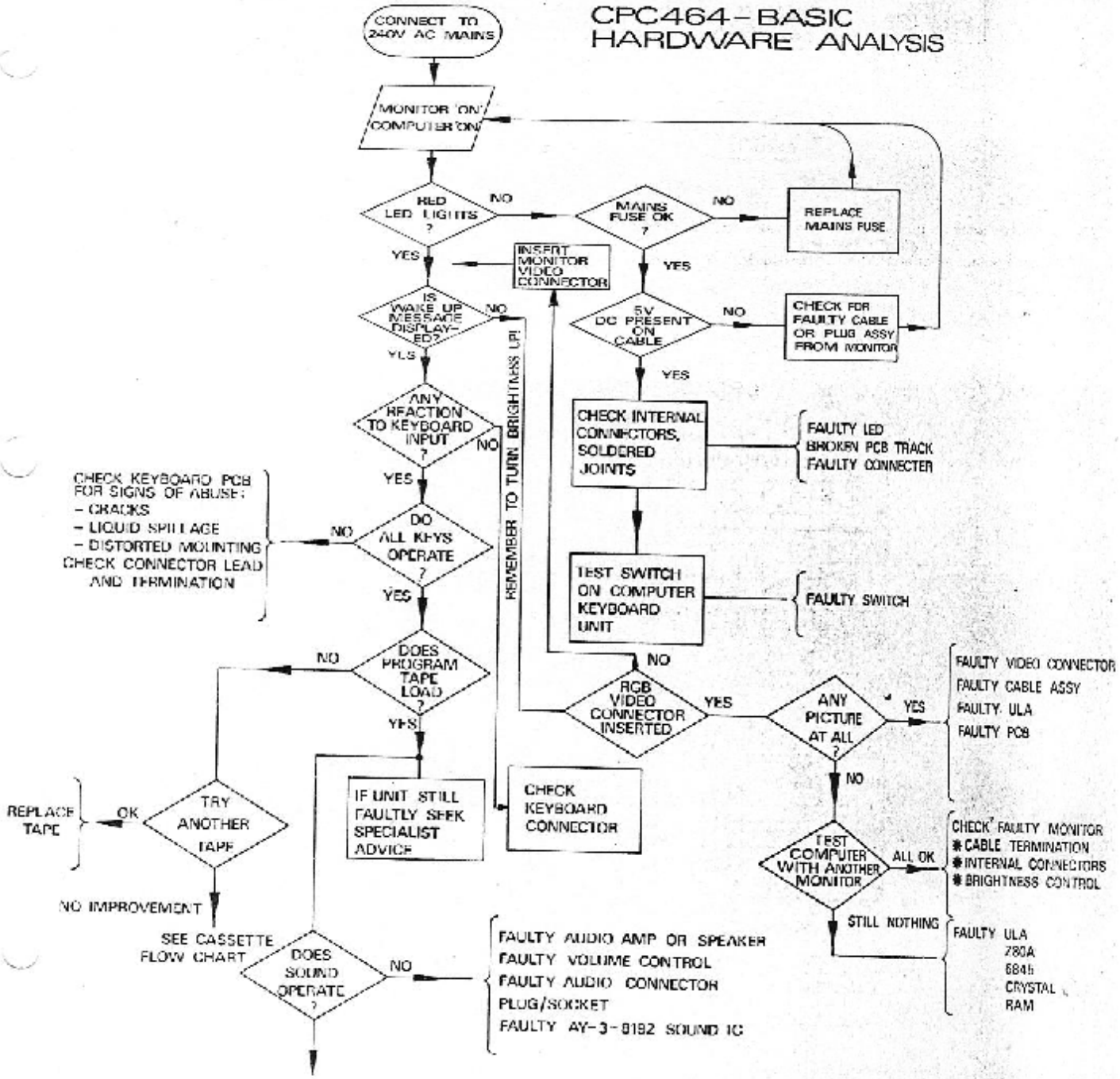

CASSETTE & SOFTWARE ANALYSIS

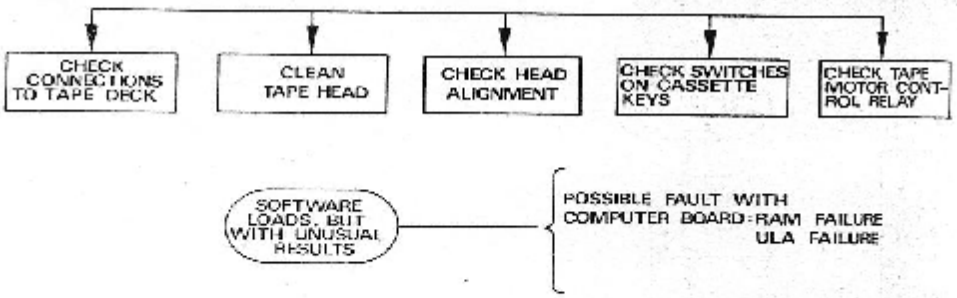

Full diagnostic teste on the C.P.U. can be carried out using the Amstrad RP1 Test Pack.
Please contact Amstrad PLC for information on same.

N.B ACTUAL 'PHYSICAL' DAMAGE TO SOFTWARE TAPE WILL PREVENT IT FROM LOADING AT ALL: IE THERE WILL BE NO 'HALF' WORK PROGRAMS. THEY EITHER LOAD OR THEY DON'T.

CPC464 FUNCTION DIAGRAMS

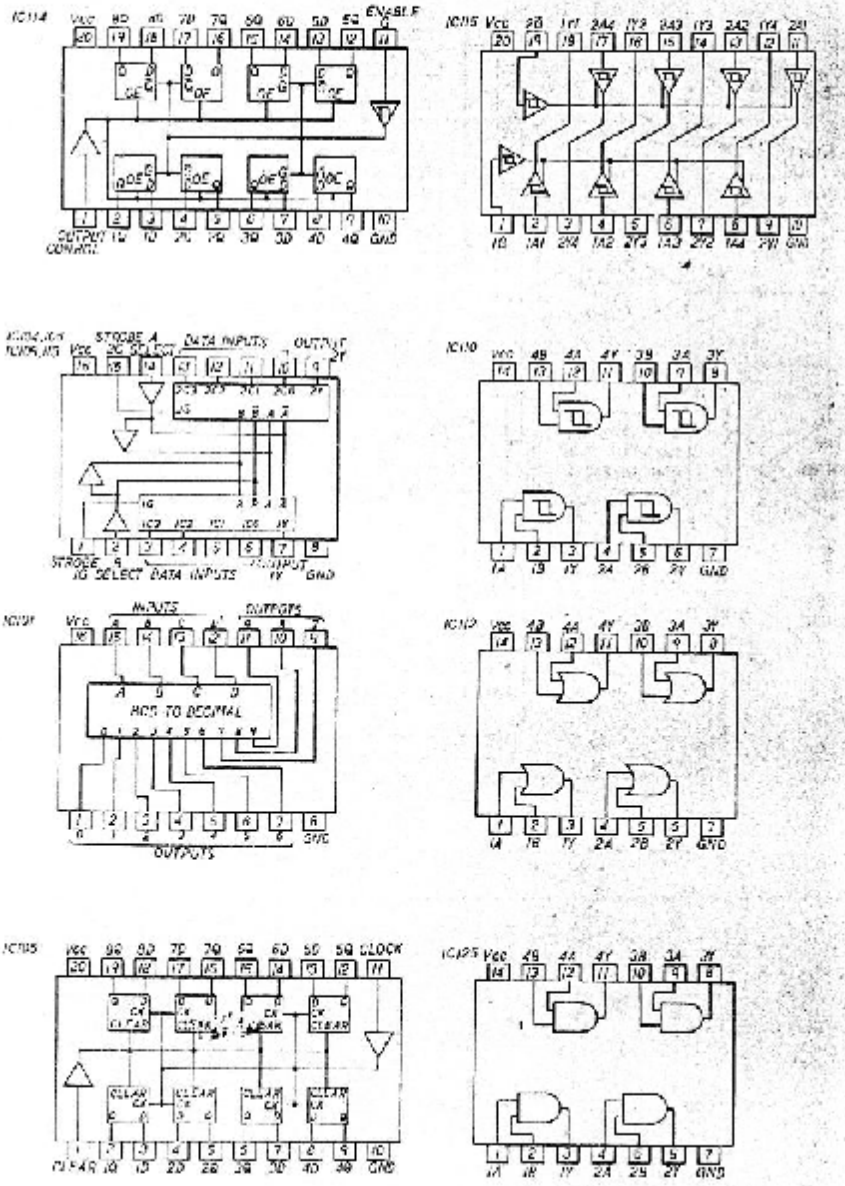

FUNCTION FOR A MICROCOMPUTER AND IC'S

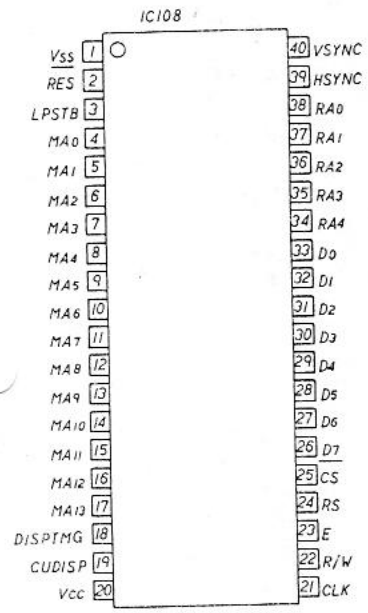

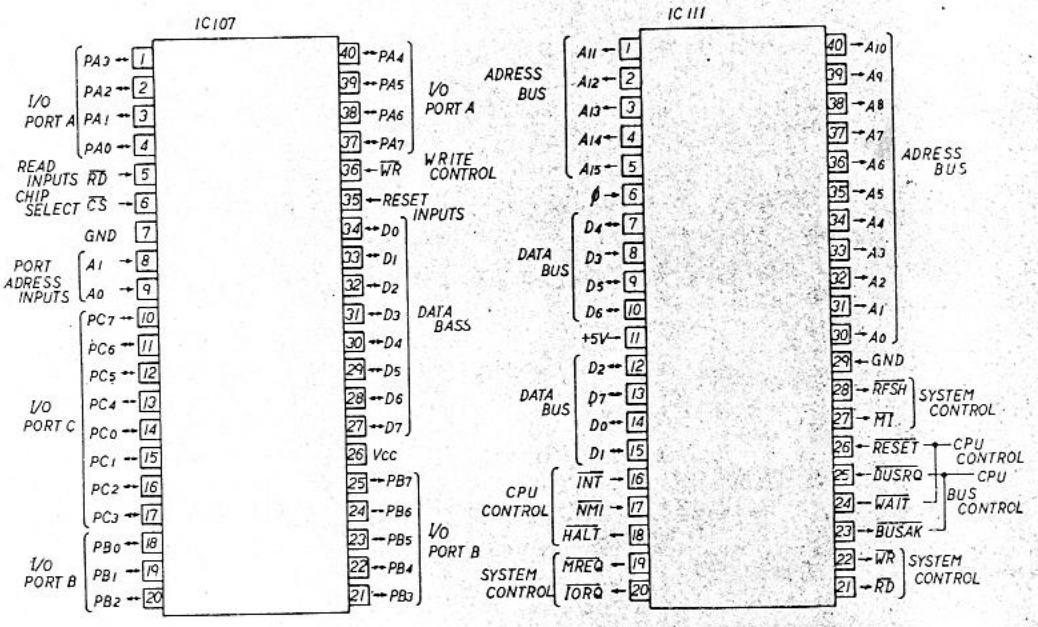

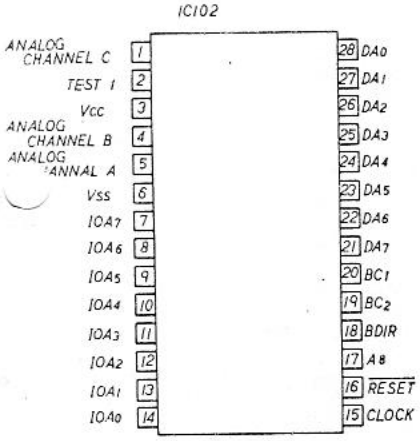

KEYBOARD SW.

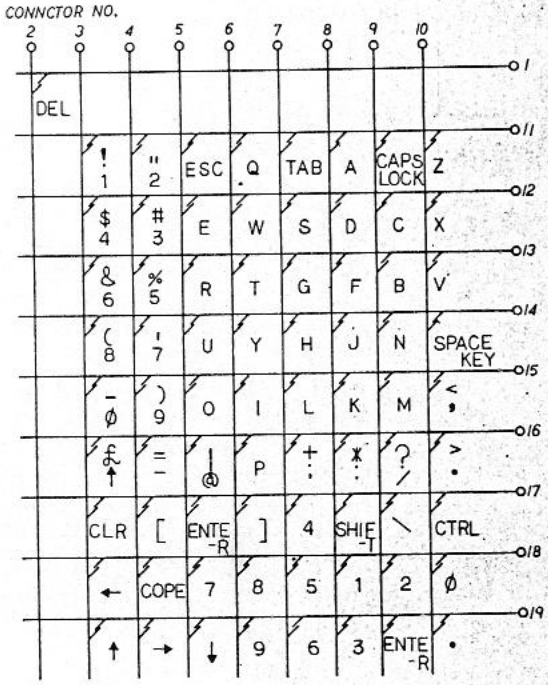

CPC464 ELECTRICAL PARTS LIST

Value	Circuit Reference	Part No.
Carbon Film Resistors (all ¼W unless shown otherwise)		
56ohm	R306	10022
68ohm	R141	10028
100ohm	R134, 140	10032
120ohm	R146-153	10034
180ohm	R315	10037
220ohm	R126, 128, 130, 136, 137	10040
330ohm	R143, 144	10044
560ohm	R154, 313, 325	10050
680ohm	R125, 127, 129, 135, 301	10052
820ohm	R324	10054
1kohm	R113, 121-123, 132, 145	10061
2k2ohm	R102-112, 124	10069
3k3ohm	R321	10073
4k7ohm	R320, 323	10077
5k6ohm	R314	10079
10kohm	R114-117, 120, 133, 142, 309, 312	10085
12kohm	R318	10087
18kohm	R308, 311	10091
22kohm	R101, 118, 119, 304, 305	10093
33kohm	R319, 322	10097
47kohm	R302, 303, 307	10101
1[illegible]ohm	R317	10115
1[illegible]ohm	R316	10147
12ohm(½W)	R138, 139	170126
Electrolytic Capacitors		
1uF/50V	C309, 311, 314	20062
10uF/16V	C324	20024
22uF/16V	C306, 316	20025
47uF/10V	C101, 102, 303, 306	1400244
100uF/10V	C301, 304	20028
100uF/16V	C315	20028
470uF/10V	C322	1400248
Ceramic Capacitors		
33pF/50V	C316	160514
200pF/50V	C321	400107
220pF/50V	C310	400107
270pF/50V	C313	170126
470pF/50V	C307	24004
0.001uF/50V	C320	24007
0.022uF/50V	C317, 319, 323	24013
0.1uF/25V	C104-128	24020
Polystyrene Capacitors		
0.[illegible]uF	C312	170217
0.[illegible]uF	C305	170128
0.068uF	C302	170129

Circuit Ref.	Description	Part No.
I.C.s		
IC101	HD74LS145	170101
IC102	AY-3-8912	40001
IC103	TMM-23256P-1950	170102
IC104, 105, 109, 113	HD74LS153	170103
IC106	HD74LS279	170104
IC107	MSL8255AP-5	170105
IC108	UK6845SP	170106
IC110, 112	HD74LS132	170107
IC111	Z5400APS	40080
IC114	HD74LS373	170108
IC115	HD74LS244	170109
IC116	2ORA043	40007
IC117-124	HM4864U-2	170110
IC125	ZN7400E-D3	40008
IC301	LA4140	170111
IC302	LA6324	170112

Circuit Ref.	Description	Part No.
Transistors		
Q101	KTC2120Y	170113
Q102, 301	KTC1815Y	170114
Q103	ZTX312L	50001
Diodes		
D101	SIL - IS2472 - HL	170115
D301	SIL - IN4002	400111
D302	LED - Red. SLP145B	170116
Coils & Tx.		
L301	82uH	170117
T101	C-12	170118
Jacks & Connectors		
J101	DIN Socket 6 Pin	170025
J102	Joystick Socket 9 Pin	170023
J103	Input/Output Socket 3.5mm R.C.A.	170022
J104.	DC Jack Socket	170024
J105-112, 116	Socket I.C. 8 Pin Dual In Line	170119
J113	Socket I.C. 14 Pin Dual In Line	170120
J114, 115	Socket I.C. 20 Pin Dual In Line	170121
Switches		
SW301	Slide Switch R/P	170122
SW302	Power On/Off	170002
SW303	Key Board Assembly	170007
Miscellaneous		
VR301	Volume Control 20k	170003
RY301	Relay	170123
SPS01	Speaker	170124
X101	Crystal HC-18/u 16MHz	170125

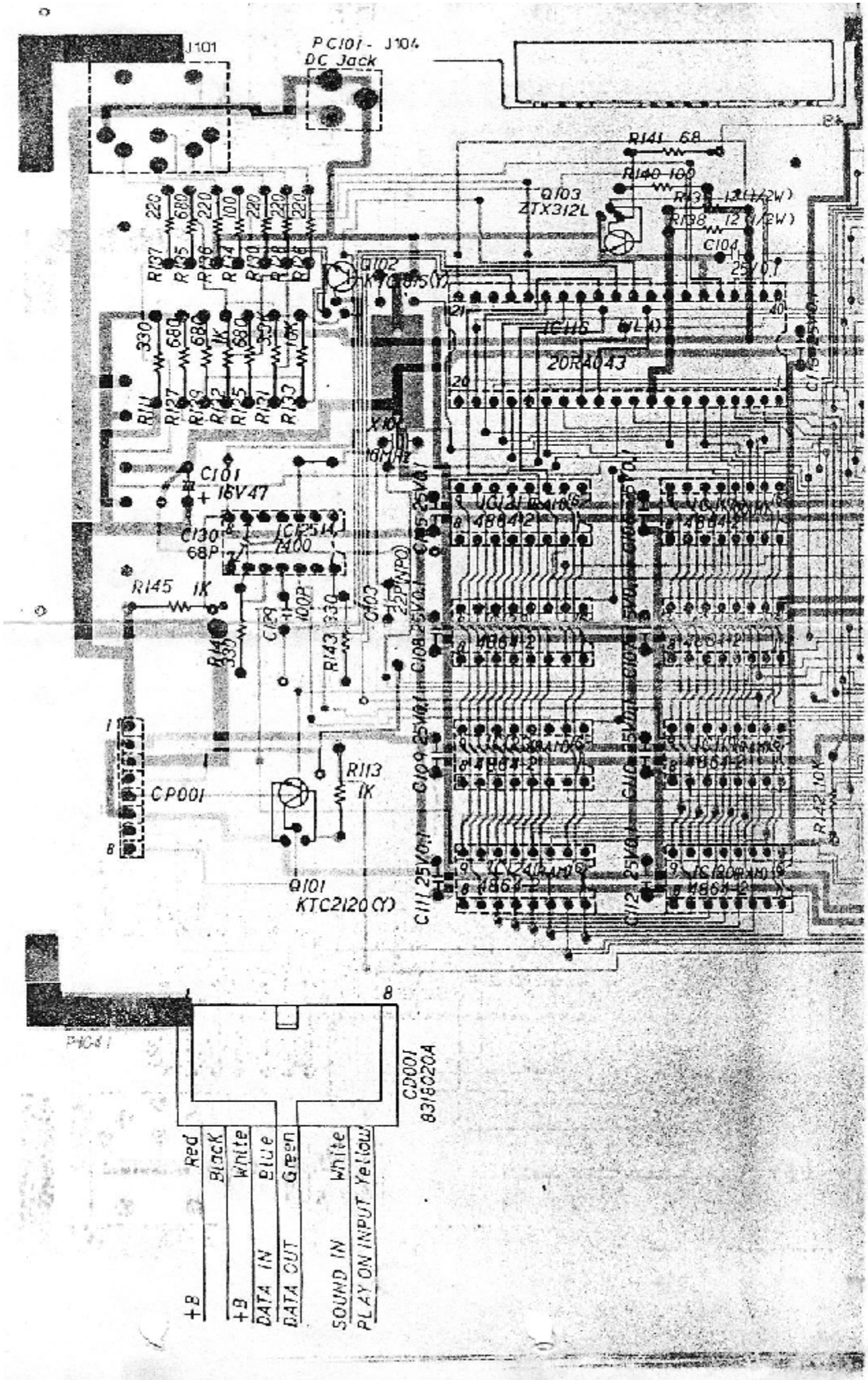
J101
PC101 - J104
DC Jack
R141 68
R140 100
Q103
ZTX312L
R138 12 (1/2W)
C104
25V0.1
Q102
IC116
20R4043
C101
16V47
C130
68P
IC125
R145 1K
R143 330
C129
100P
C103
22P(NPO)
R113
1K
CP001
Q101
KTC2120 (Y)
R142 10K
CD001
8318020A
Red
Black
White
Blue
Green
White
Yellow
+B
+B
DATA IN
DATA OUT
SOUND IN
PLAY ON INPUT

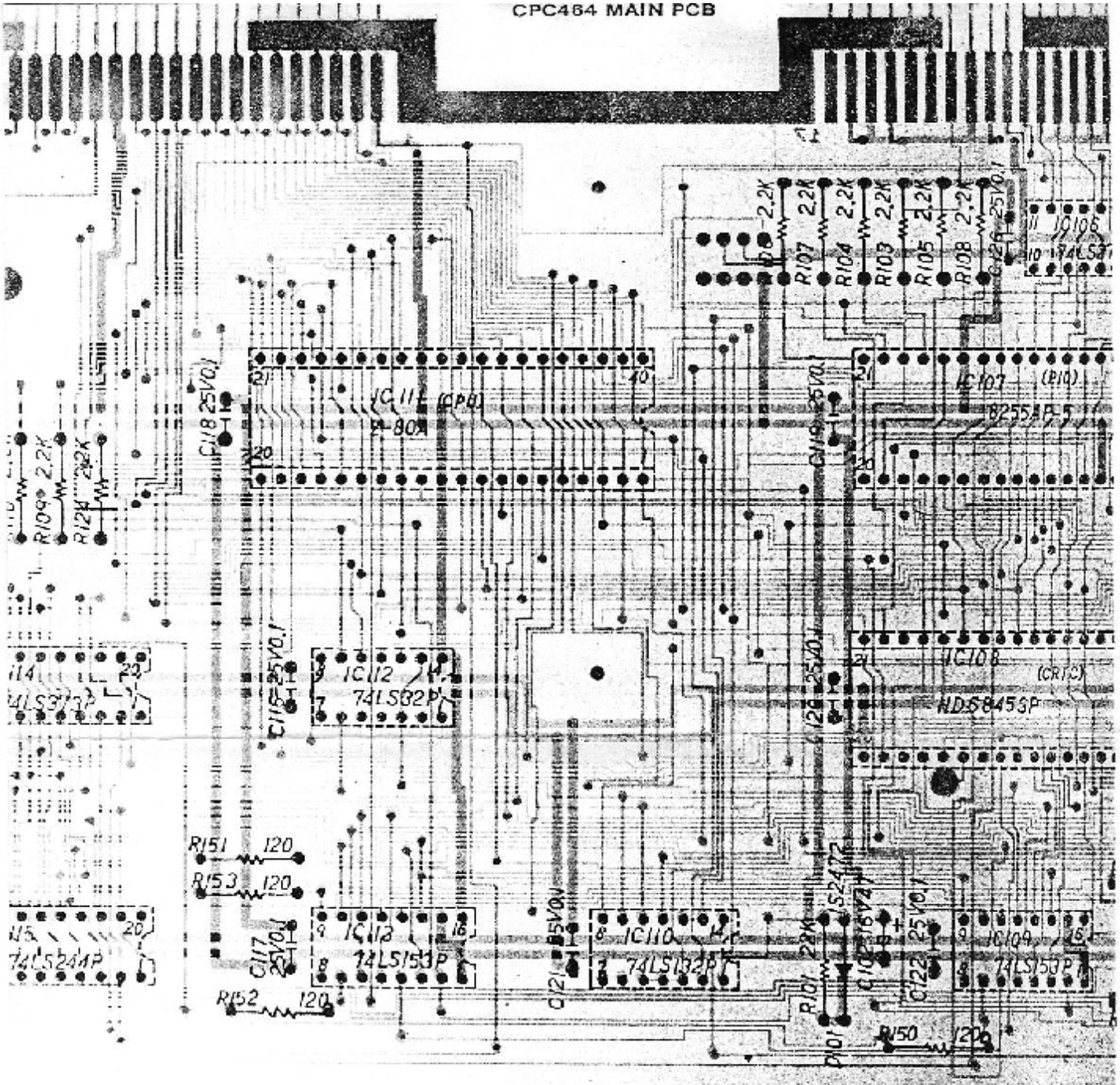

IC114	74LS373P	Octal 3-State D-Latches
IC115	74LS244P	Octal 3-State Bus Buffers
IC104, IC105, IC109, IC113	74LS153P	Dual 4to1 Date Selectors
IC110	74LS132P	Quad 2 Input NAND Schmitt Triggers
IC101	74LS145P	O.C.BCD to DECIMAL Decoder/Driver
IC112	74LS32P	Quad 2 Input OR
IC106	74LS273	Octal D-FFs
IC125	7400	Quad 2 Input NAND

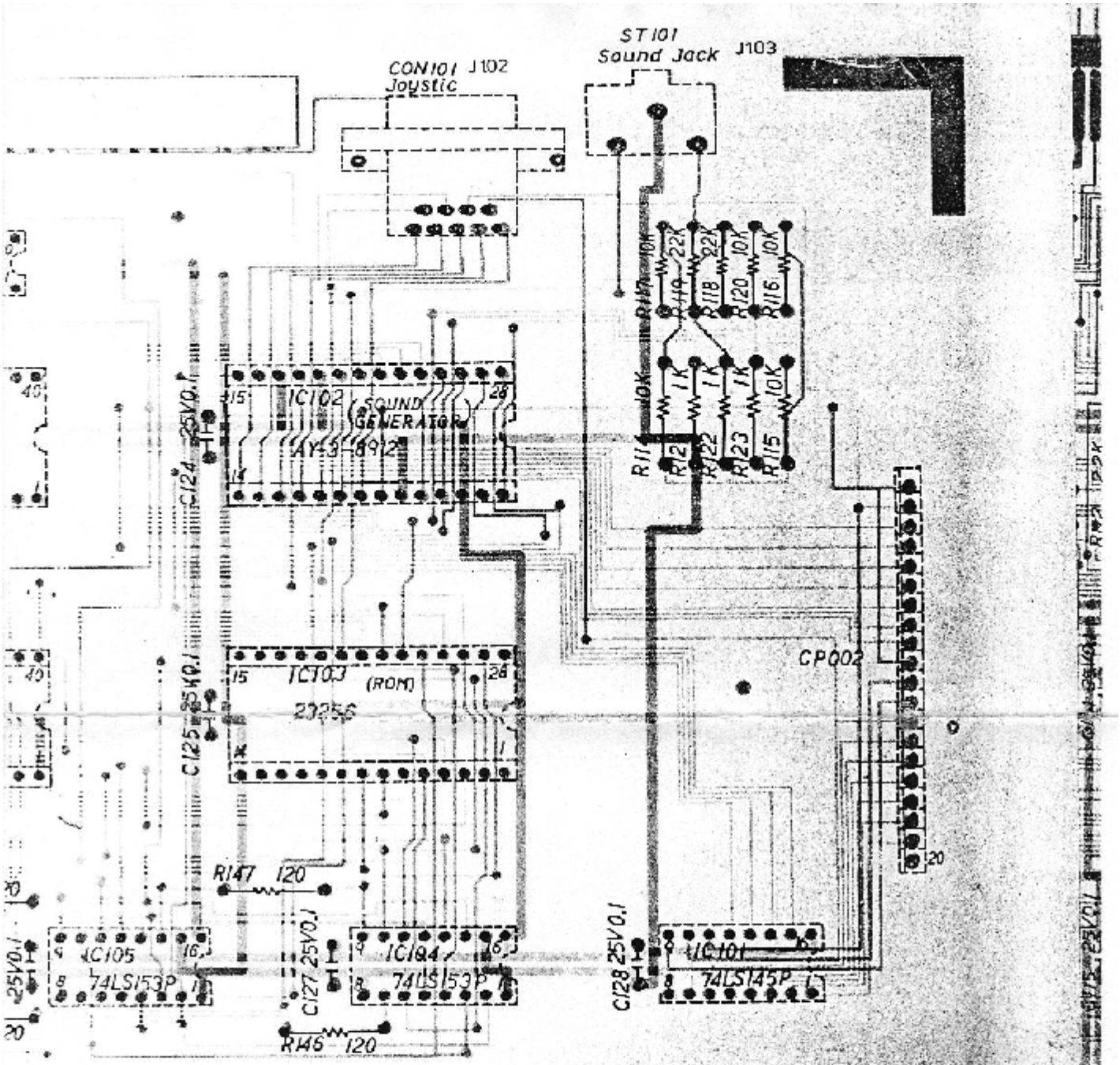

IC117-IC124	HM4864P-2	Memory
IC108	HD6845SP	CRTC
IC107	M5L8255AP-5	P10
IC103	23256	256K Bit Rom
IC102	AY-3-8912	Sound Generator
IC111	Z-80A	CPU
IC116	20RA043	ULA