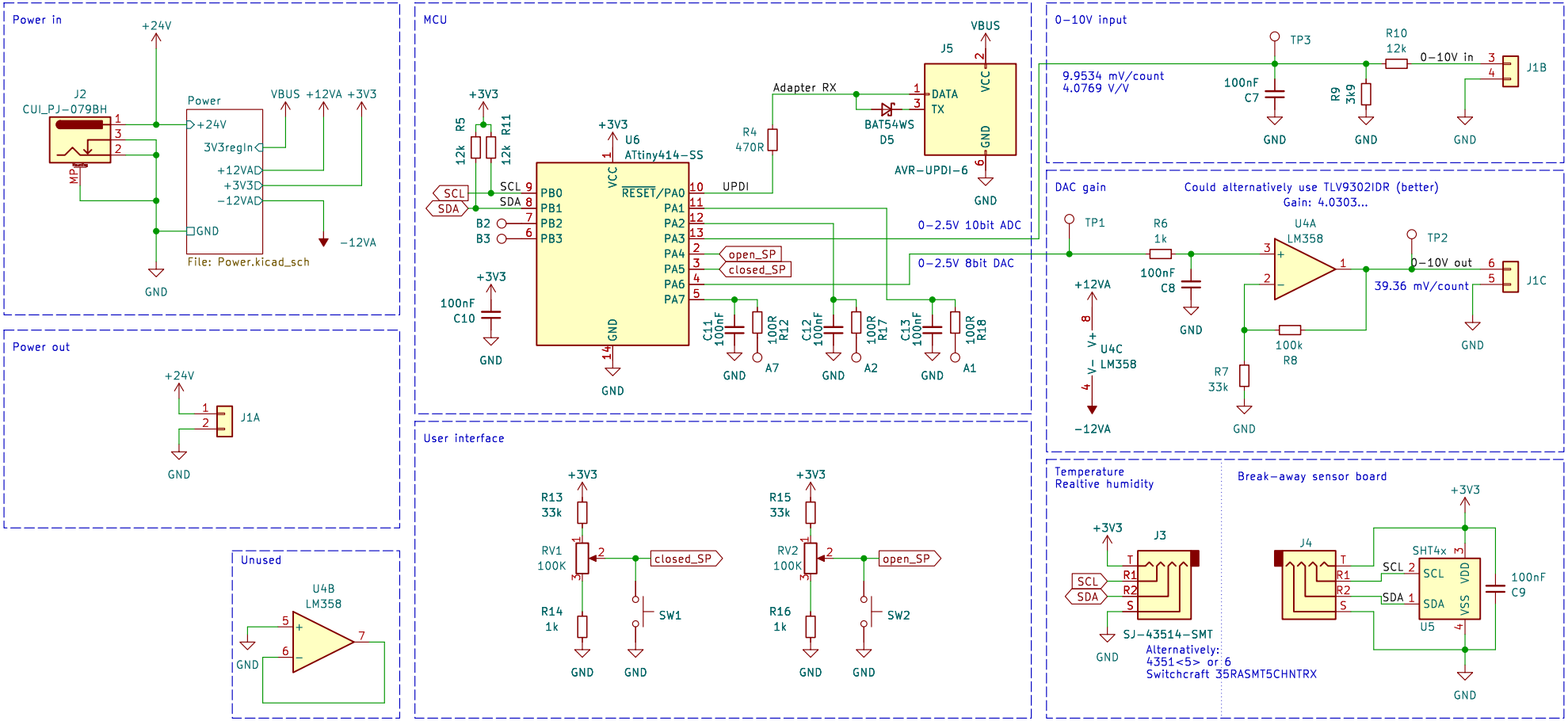

Sheet: /
File: Morten-sol-vindue.kicad_sch

Title:

Size: A4	Date:	Rev:
KiCad E.D.A. kicad 7.0.5-1.fc38		Id: 1/2

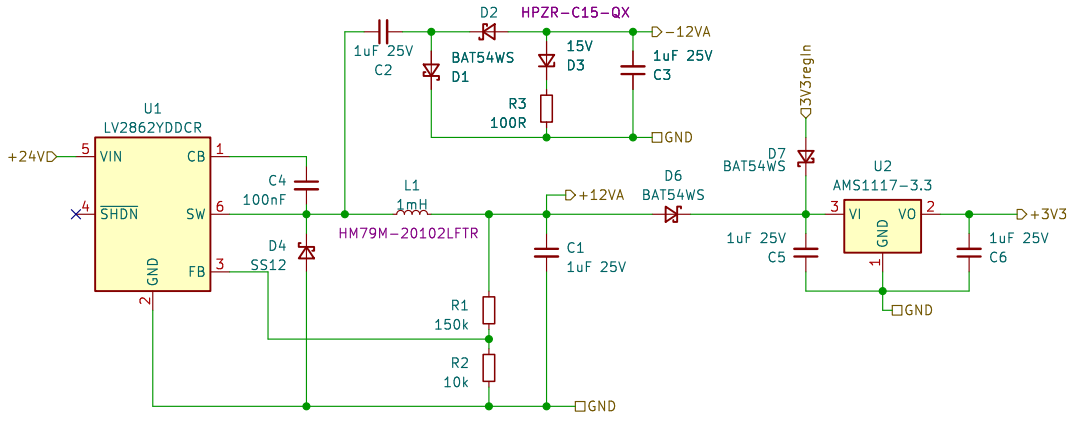

Falstad: https://sche.cc/gqdnx

+5V: 10–50mA
–12V: 0–15mA
+12V: 10–50mA

Sheet: /Power/
File: Power.kicad_sch

Title: Power

Size: A4	Date: 2023-04-27	**Rev: 1.0.0**
KiCad E.D.A. kicad 7.0.5-1.fc38		Id: 2/2