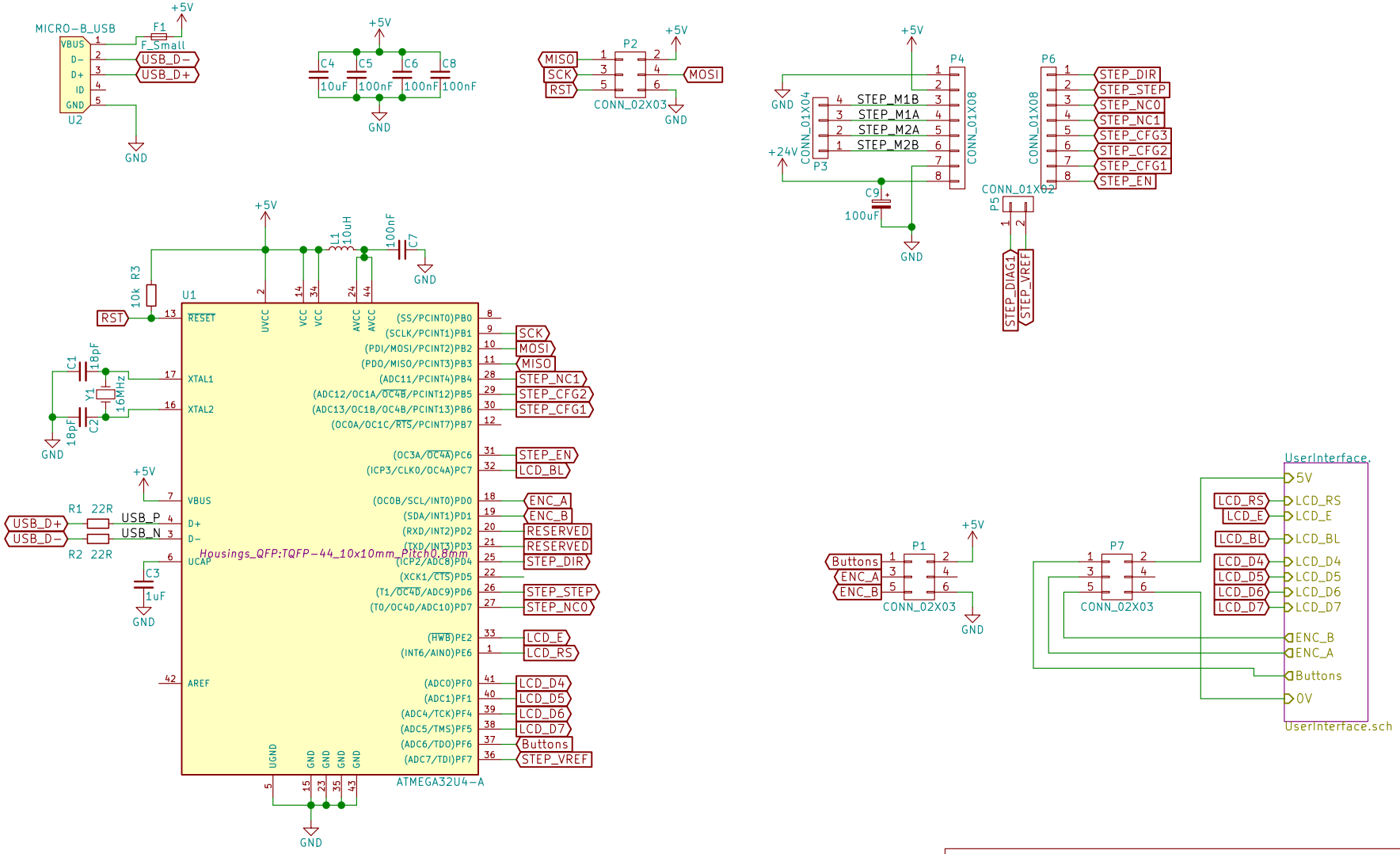

Sheet: /
File: Camera-slide-driver.sch

Title:

Size: A4	Date:	Rev:
KiCad E.D.A. kicad 4.0.1-3.201512161002+619738ubuntu15.10.1-stable	Id: 1/2	