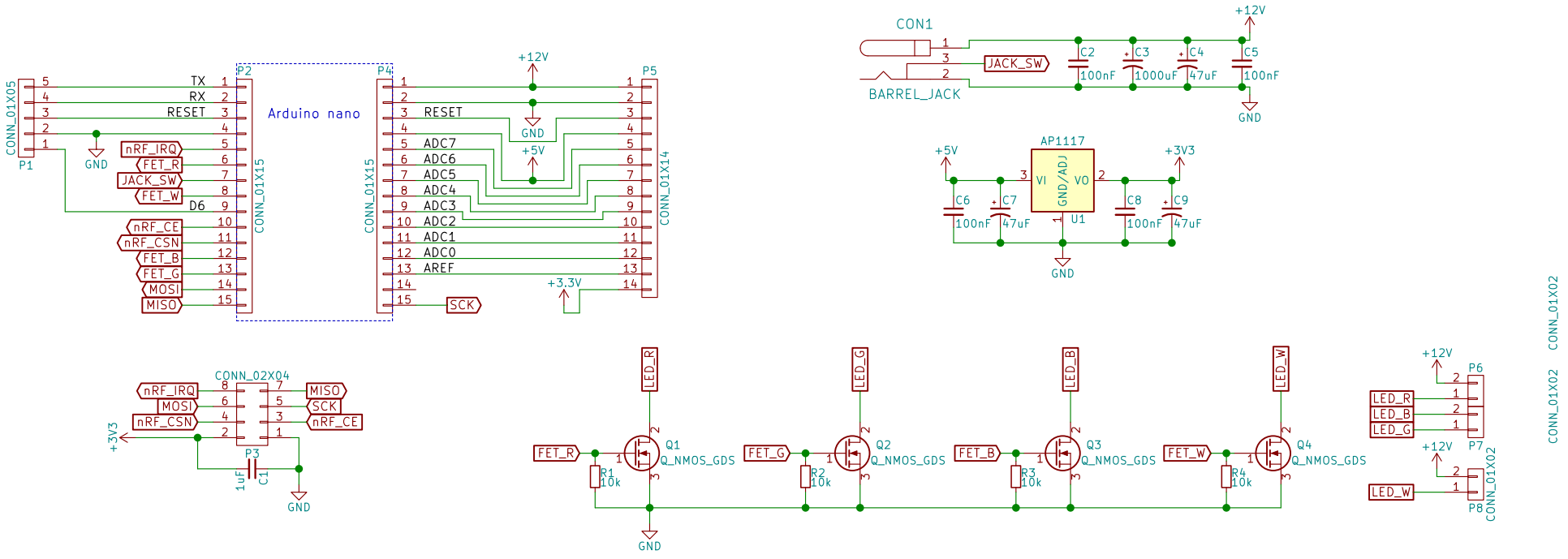

Circuit by Hypfer
Schematic by Dumle29

Sheet: /
File: led_strip_controller.sch

Title: RGB+W 12V LED strip controller

Size: A4	Date: 2015-12-11	Rev: 0.1
KiCad E.D.A. kicad 4.0.0-2.201512091501+619538ubuntu15.04.1-stable	Id: 1/1	