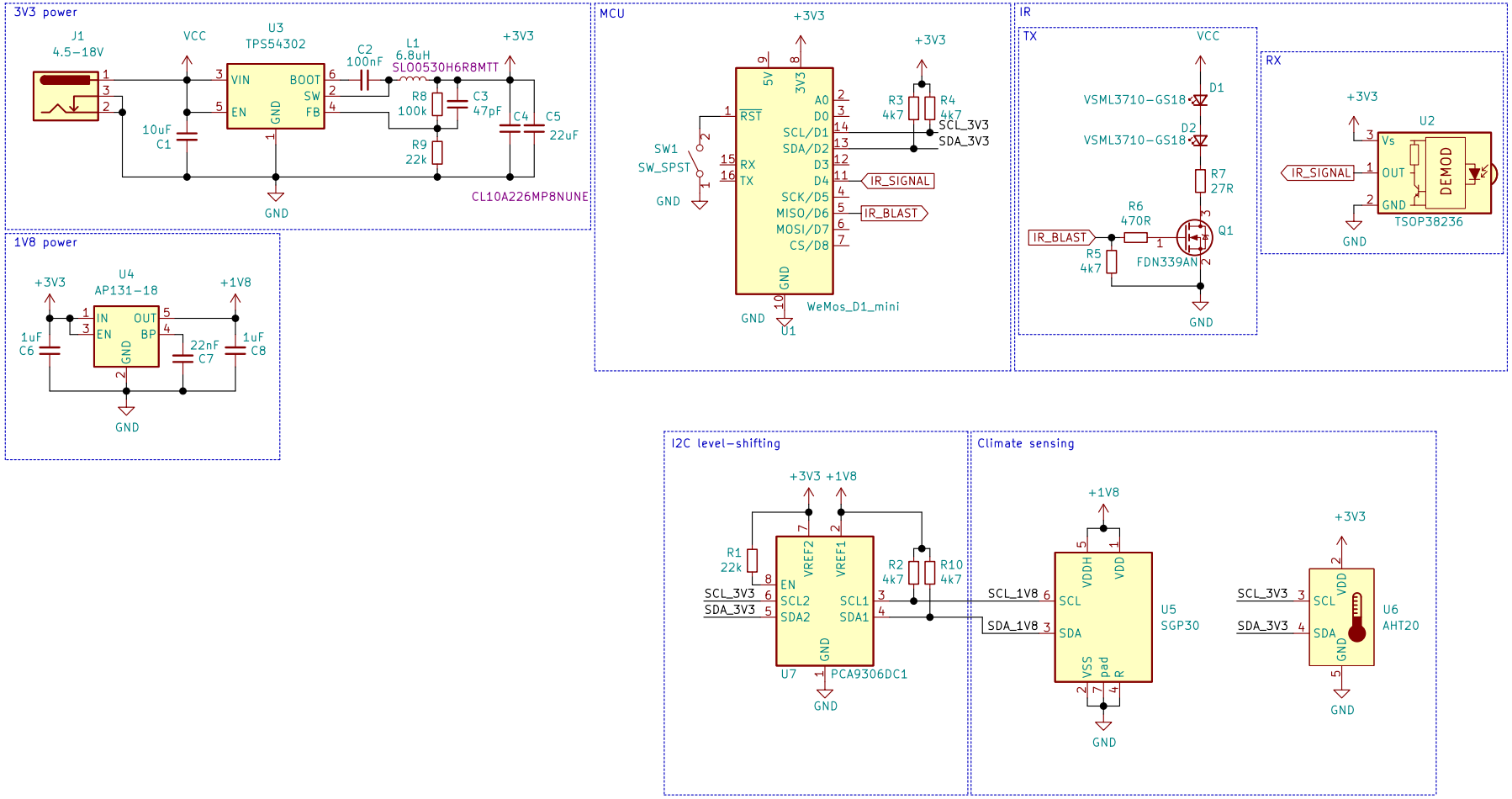

WiFi connected IR blaster / reciever

Sheet: /
File: pcb.kicad_sch

Title: WiFIR

Size: A4	Date:	**Rev: 0.3**
KiCad E.D.A. kicad (5.99.0–9568–gb9d26a55f2)		Id: 1/1