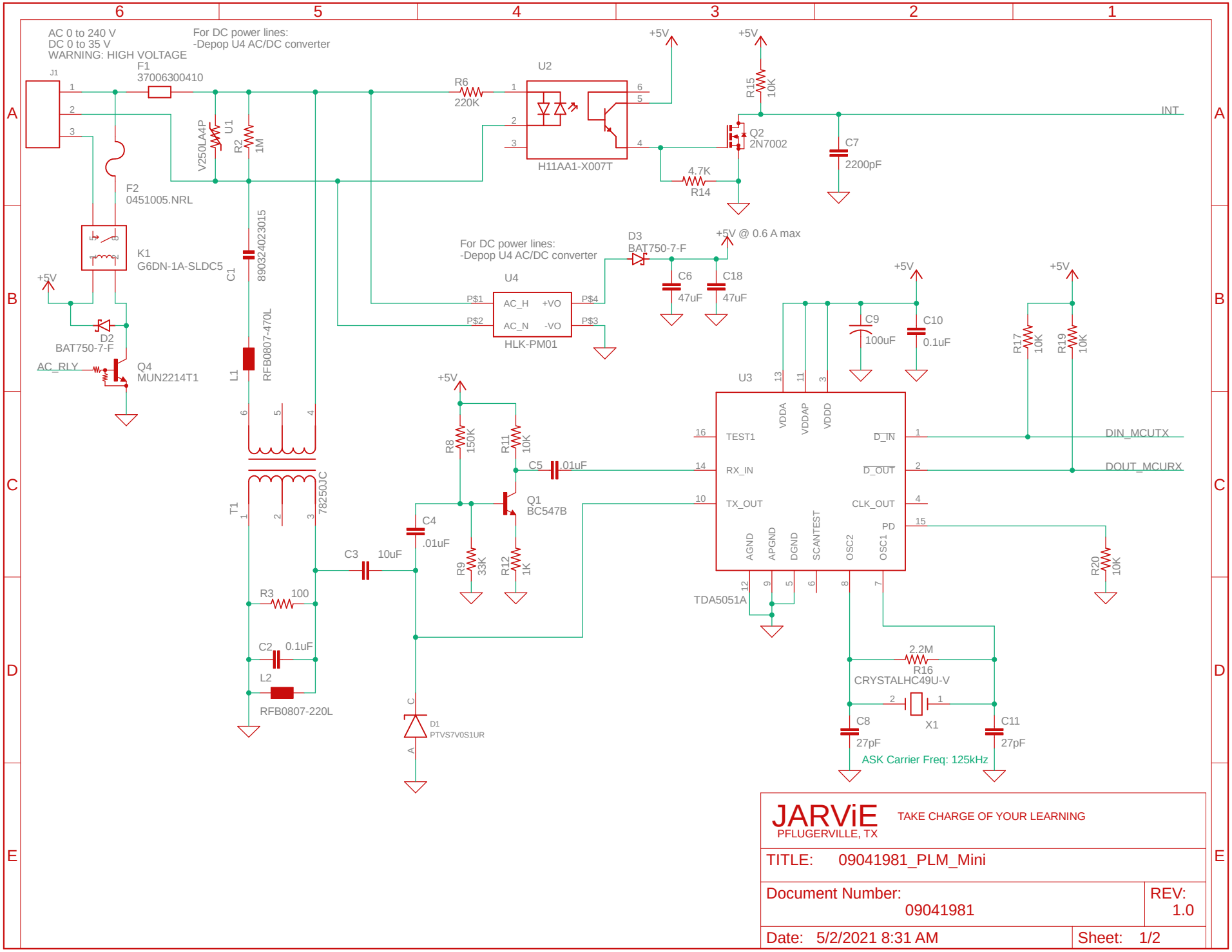

JARViE
PFLUGERVILLE, TX

TAKE CHARGE OF YOUR LEARNING

TITLE: 09041981_PLM_Mini

Document Number: 09041981

REV: 1.0

Date: 5/2/2021 8:31 AM

Sheet: 1/2

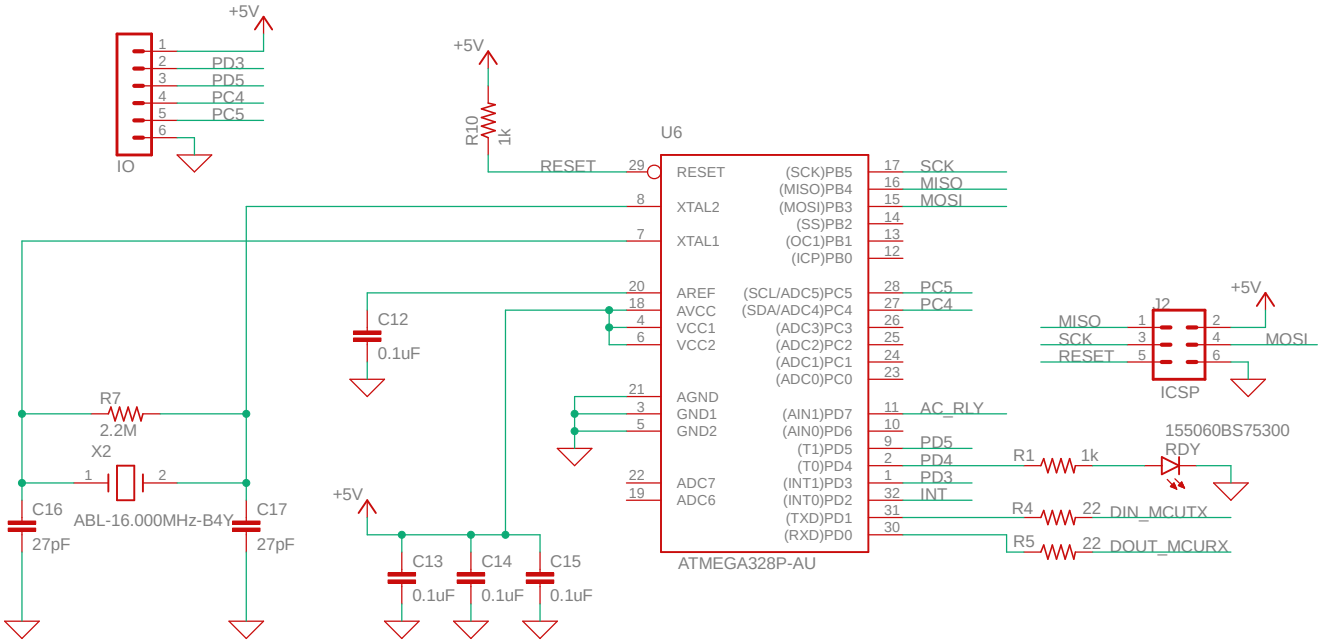

JARViE
PFLUGERVILLE, TX

TAKE CHARGE OF YOUR LEARNING

TITLE: 09041981_PLM_Mini

Document Number: 09041981

REV: 1.0

Date: 5/2/2021 8:31 AM

Sheet: 2/2