Sheet: Heater & Fan Control

File: Htr_Fan.sch

Sheet: Stepper Driver

File: Stepper_Drv.sch

Sheet: Headers & Power

File: Headers.sch

https://github.com/duet3d/hardware
Duet3D license (based on CERN OSH License 1.2)

Duet3D

Sheet: /
File: Duex5.sch

Title: Duex5

Size: A4	Date: 2021-06-24	**Rev: 0.11**
KiCad E.D.A. kicad (5.1.4)-1		Id: 1/4

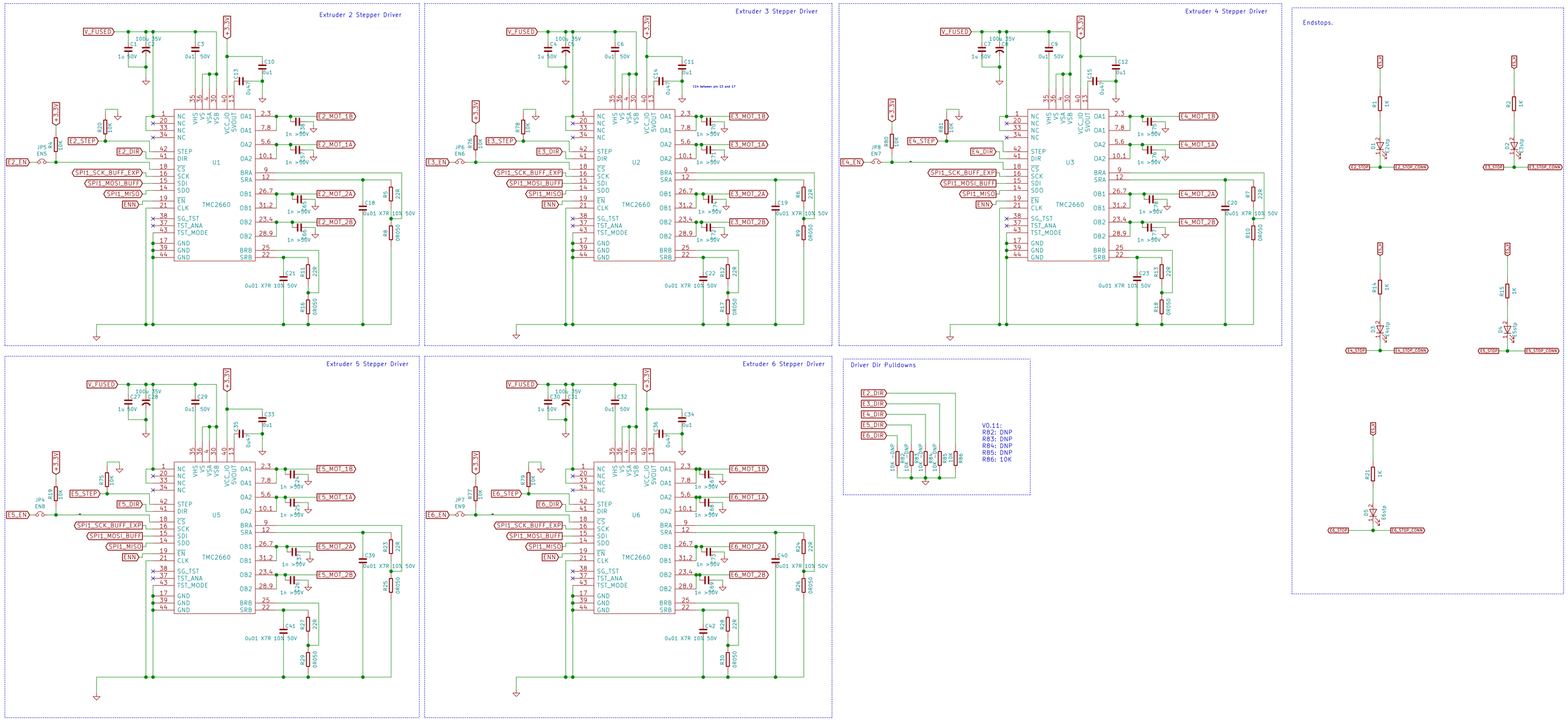

https://github.com/duet3d/hardware
Duet3D license (based on CERN OSH License 1.2)

Duet3D

Sheet: /Stepper Driver/
File: Stepper_Drv.sch

Title: Duex5

Size: A2	Date: 2021-06-24	**Rev: 0.11**
KiCad E.D.A. kicad (5.1.4)-1		Id: 2/4

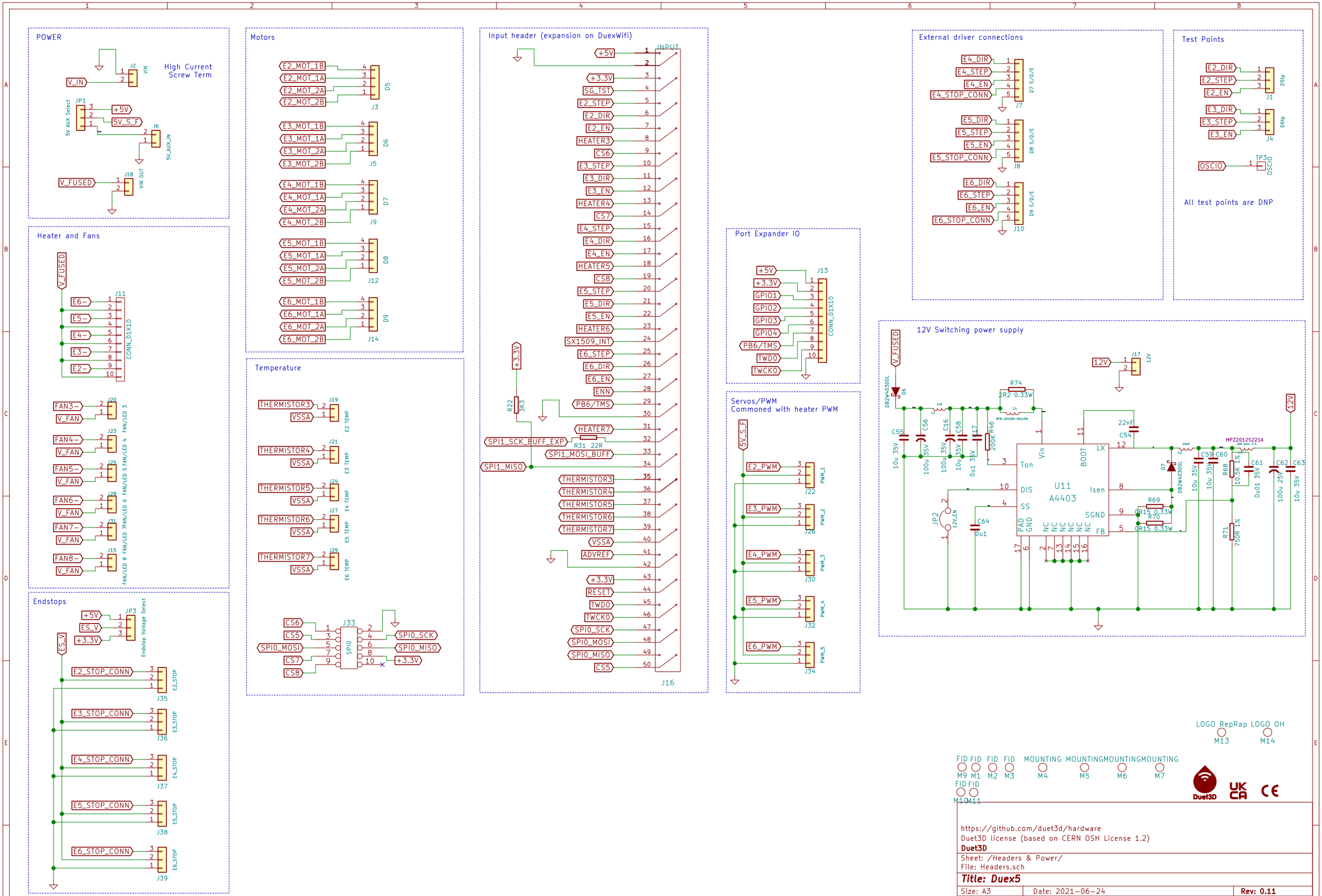

https://github.com/duet3d/hardware
Duet3D license (based on CERN OSH License 1.2)
Duet3D

Sheet: /Headers & Power/
File: Headers.sch

Title: Duex5

Size: A3	Date: 2021-06-24	**Rev: 0.11**
KiCad E.D.A. kicad (5.1.4)-1		Id: 3/4

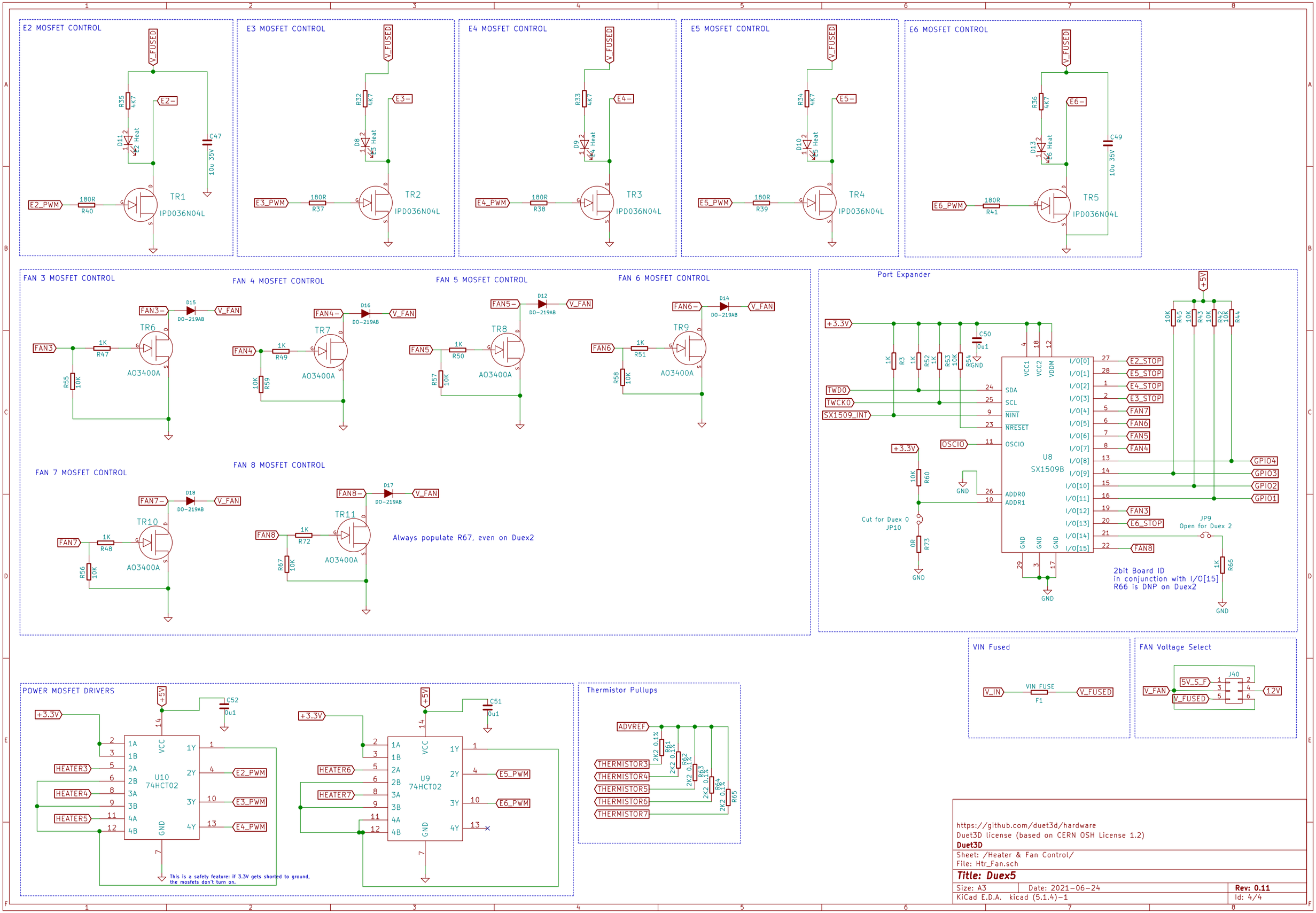

https://github.com/duet3d/hardware
Duet3D license (based on CERN OSH License 1.2)
Duet3D

Sheet: /Heater & Fan Control/
File: Htr_Fan.sch

Title: Duex5

Size: A3	Date: 2021-06-24	**Rev: 0.11**
KiCad E.D.A. kicad (5.1.4)-1		Id: 4/4