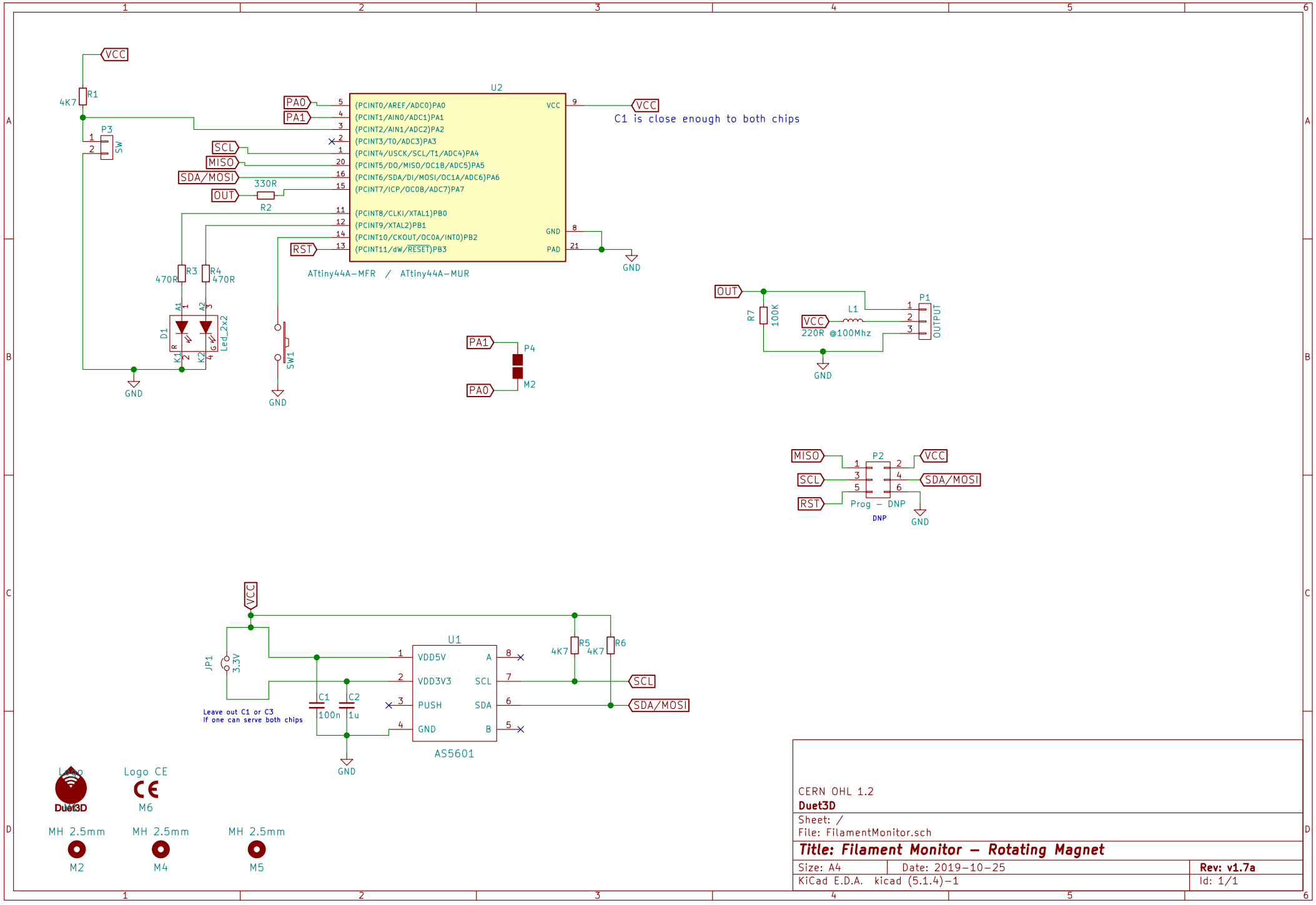

CERN OHL 1.2

Duet3D

Sheet: /

File: FilamentMonitor.sch

Title: Filament Monitor – Rotating Magnet

Size: A4	Date: 2019-10-25	**Rev: v1.7a**
KiCad E.D.A. kicad (5.1.4)-1		Id: 1/1