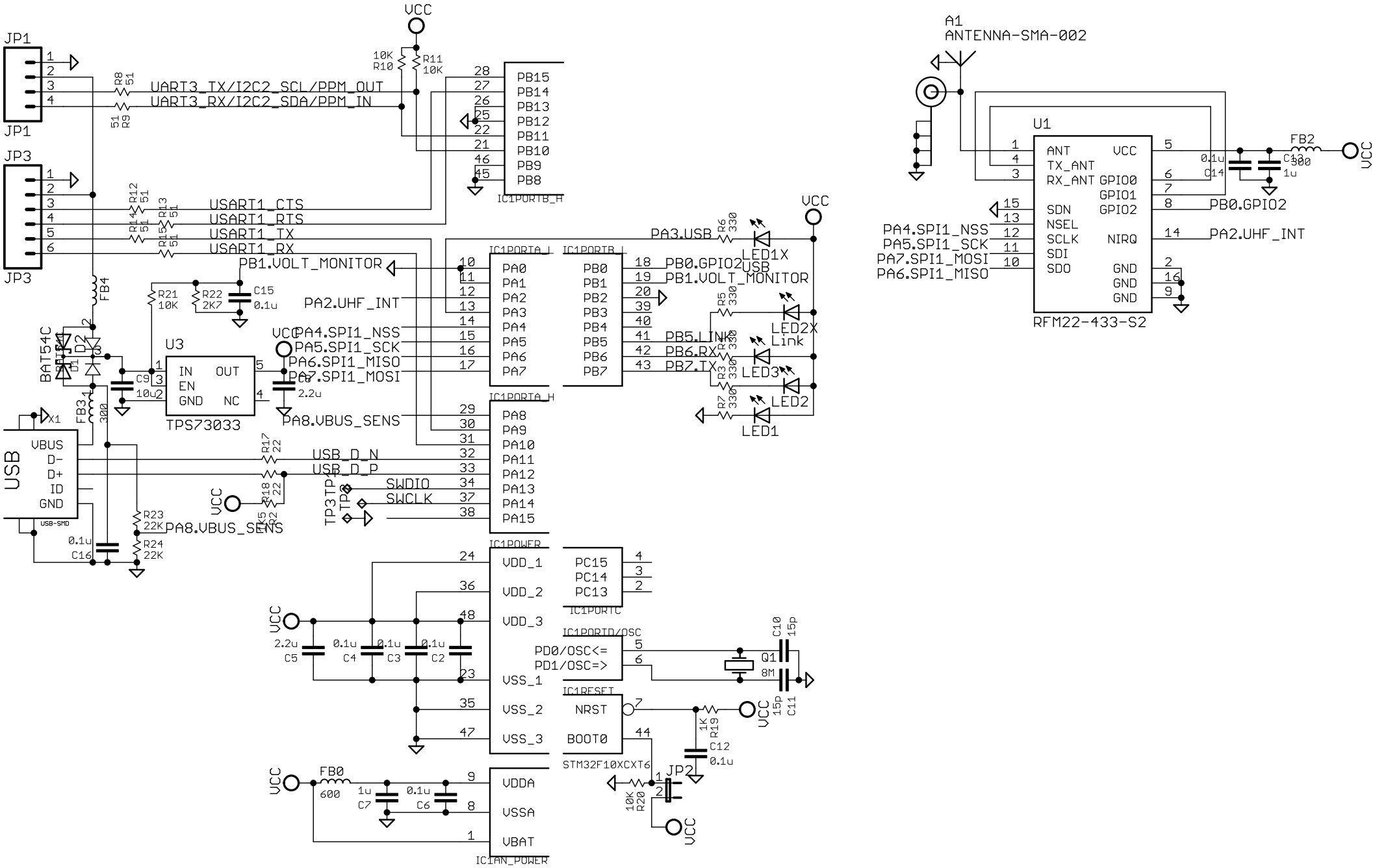
JP1
JP3
VCC
R8 51
R9 51
R10 10K
R11 10K
UART3_TX/I2C2_SCL/PPM_OUT
UART3_RX/I2C2_SDA/PPM_IN
R12 51
R13 51
R14 51
R15 51
USART1_CTS
USART1_RTS
USART1_TX
USART1_RX
PB15
PB14
PB13
PB12
PB11
PB10
PB9
PB8
IC1PORTB_H
PB1.VOLT_MONITOR
PA2.UHF_INT
PA4.SPI1_NSS
PA5.SPI1_SCK
PA6.SPI1_MISO
PA7.SPI1_MOSI
PA8.VBUS_SENS
FB4
R21 10K
R22 2K7
C15 0.1u
U3
IN
EN
GND
OUT
NC
TPS73033
C9 10u
C8 2.2u
BAT54C
D1
D2
FB3 300
X1
USB
VBUS
D-
D+
ID
GND
USB-SMD
R17 22
R18 22
USB_D_N
USB_D_P
SWDIO
SWCLK
TP3
TP4
R23 22K
R24 22K
C16 0.1u
IC1PORTA_L
PA0
PA1
PA2
PA3
PA4
PA5
PA6
PA7
IC1PORTB_L
PB0
PB1
PB2
PB3
PB4
PB5
PB6
PB7
PB0.GPIO2
PB1.VOLT_MONITOR
PB5.LINK
PB6.RX
PB7.TX
PA3.USB
R6 330
R5 330
R4 330
R3 330
R7 330
LED1X
LED2X
LED3
LED2
LED1
USB
Link
IC1PORTA_H
PA8
PA9
PA10
PA11
PA12
PA13
PA14
PA15
IC1POWER
VDD_1
VDD_2
VDD_3
VSS_1
VSS_2
VSS_3
IC1PORTC
PC15
PC14
PC13
IC1PORTD/OSC
PD0/OSC<=
PD1/OSC=>
Q1 8M
C10 15p
C11 15p
IC1RESET
NRST
BOOT0
STM32F10XCXT6
R19 1K
C12 0.1u
JP2
R20 10K
C5 2.2u
C4 0.1u
C3 0.1u
C2 0.1u
FB0 600
C7 1u
C6 0.1u
VDDA
VSSA
VBAT
IC1AN_POWER
A1
ANTENNA-SMA-002
U1
ANT
TX_ANT
RX_ANT
SDN
NSEL
SCLK
SDI
SDO
VCC
GPIO0
GPIO1
GPIO2
NIRQ
GND
RFM22-433-S2
PA4.SPI1_NSS
PA5.SPI1_SCK
PA7.SPI1_MOSI
PA6.SPI1_MISO
PB0.GPIO2
PA2.UHF_INT
C13 1u
C14 0.1u
FB2 300