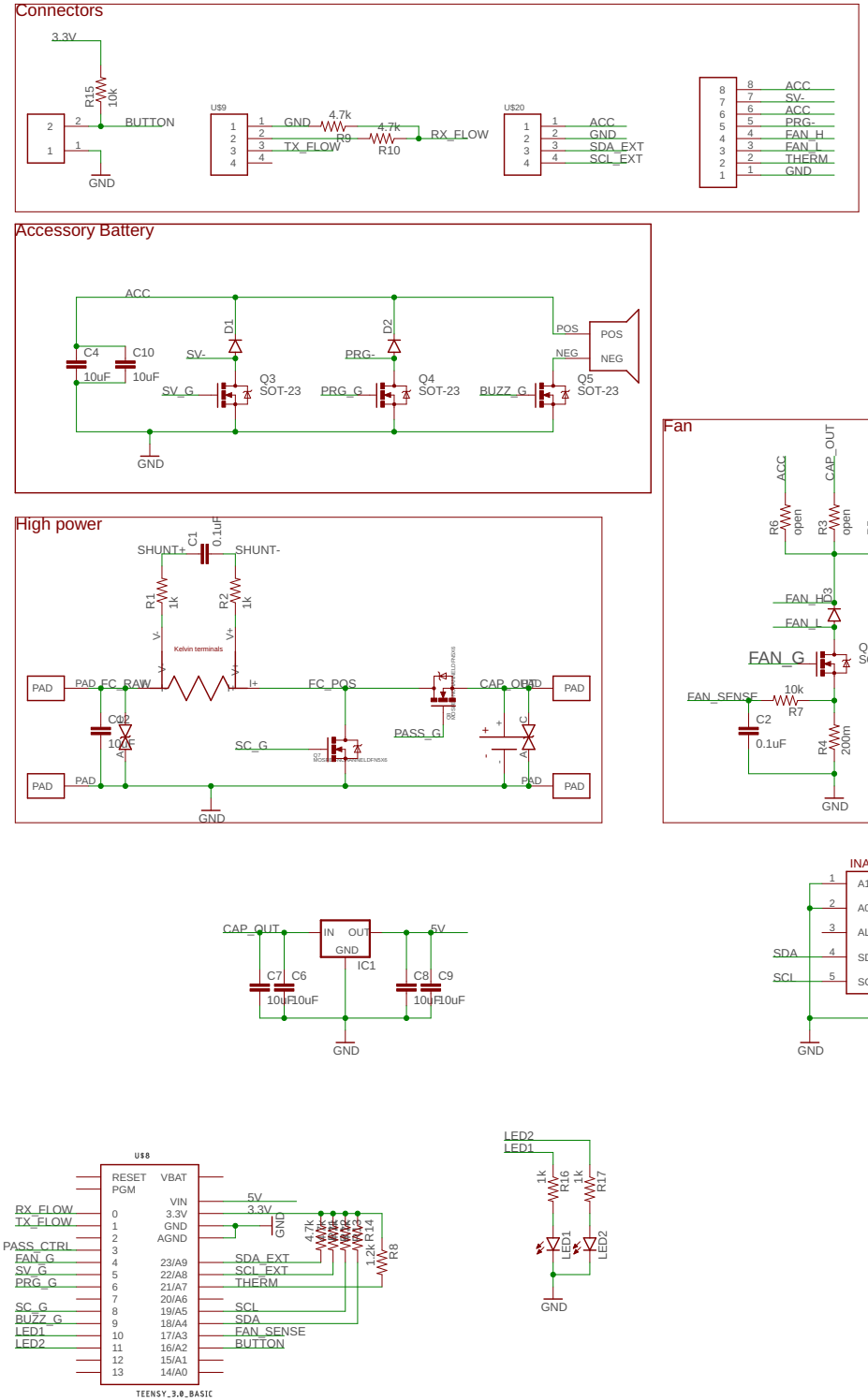
Connectors
3.3V
R15
10k
BUTTON
GND
U$9
GND
TX_FLOW
4.7k
R9
4.7k
R10
RX_FLOW
U$20
ACC
GND
SDA_EXT
SCL_EXT
ACC
SV-
ACC
PRG-
FAN_H
FAN_L
THERM
GND
Accessory Battery
ACC
C4
10uF
C10
10uF
D1
SV-
D2
PRG-
POS
NEG
POS
NEG
SV_G
Q3
SOT-23
PRG_G
Q4
SOT-23
BUZZ_G
Q5
SOT-23
GND
High power
SHUNT+
C1
0.1uF
SHUNT-
R1
1k
R2
1k
Kelvin terminals
PAD
PAD
FC_RAW
I+
FC_POS
CAP_OUT
PAD
PAD
C2
10uF
SC_G
PASS_G
PAD
PAD
PAD
GND
Fan
ACC
CAP_OUT
5V
R6
open
R3
open
R5
0
FAN_H
D3
FAN_L
FAN_G
Q6
SOT-23
FAN_SENSE
10k
R7
C2
0.1uF
R4
200m
GND
INA226
A1
A0
ALERT
SDA
SCL
IN+
IN-
VBUS
GND
VS
SHUNT+
SHUNT-
SDA
SCL
3.3V
C11
0.1uF
GND
CAP_OUT
IN
OUT
GND
IC1
5V
C7
C6
10uF
10uF
C8
C9
10uF
10uF
GND
SCREW
SCREW
SCREW
SCREW
5V
0.1uF
C3
PASS_CTRL
VCC
VCCUV
BST
GND
TS
INP
TGUP
OVLO
TGDN
CAP_OUT
PASS_G
C5
0.1uF
GND
U$8
RESET
PGM
VBAT
VIN
3.3V
GND
AGND
RX_FLOW
TX_FLOW
PASS_CTRL
FAN_G
SV_G
PRG_G
SC_G
BUZZ_G
LED1
LED2
23/A9
22/A8
21/A7
20/A6
19/A5
18/A4
17/A3
16/A2
15/A1
14/A0
5V
3.3V
GND
4.7k
4.7k
4.7k
4.7k
4.7k
R14
1.2k
R8
SDA_EXT
SCL_EXT
THERM
SCL
SDA
FAN_SENSE
BUTTON
TEENSY_3.0_BASIC
LED2
LED1
1k
R16
1k
R17
LED1
LED2
GND