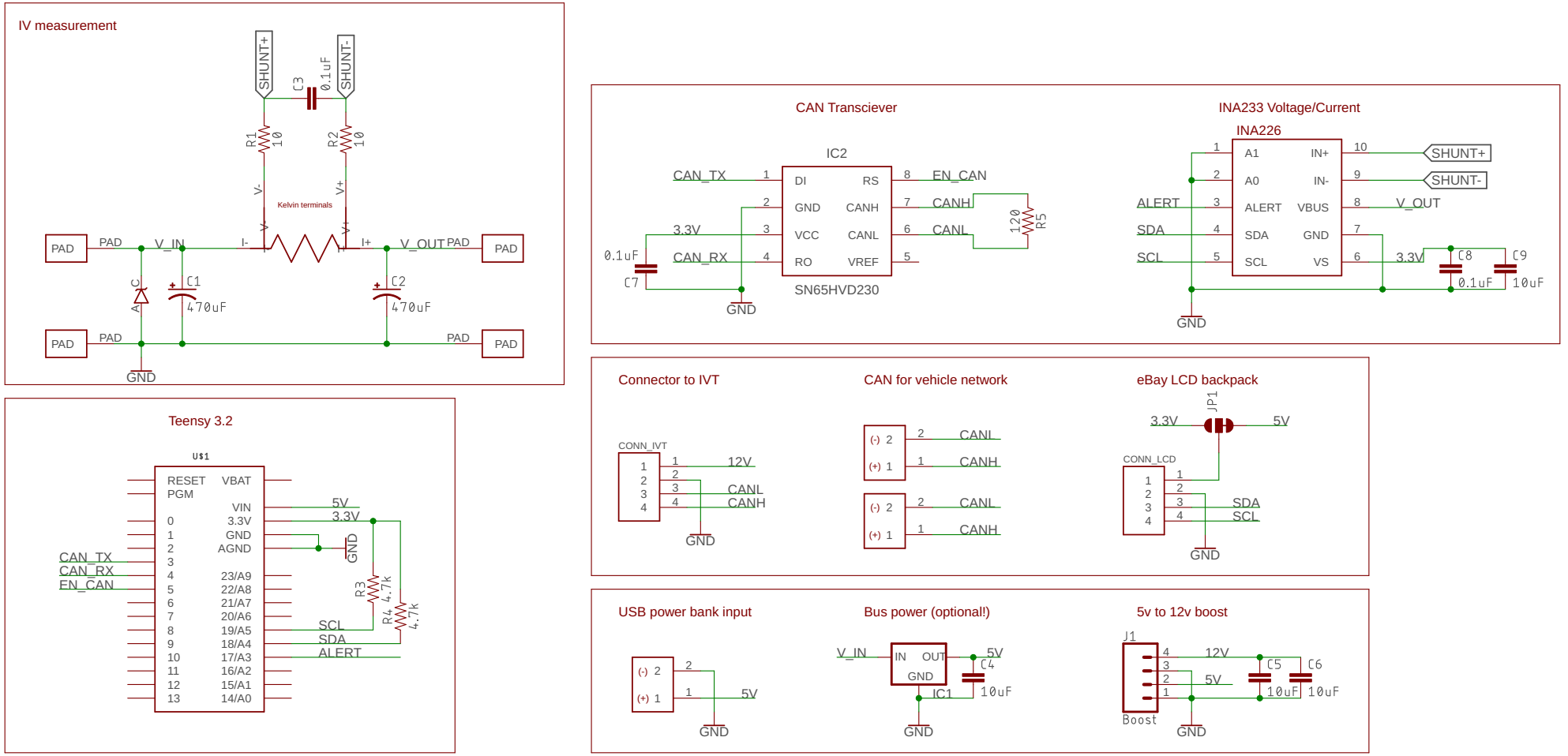
IV measurement
SHUNT+
SHUNT-
C3
0.1uF
R1
10
R2
10
V-
V+
Kelvin terminals
PAD
V_IN
I-
I+
V_OUT
C1
470uF
C2
470uF
GND
CAN Transciever
IC2
CAN_TX
3.3V
CAN_RX
0.1uF
C7
DI
GND
VCC
RO
RS
CANH
CANL
VREF
EN_CAN
CANH
CANL
120
R5
SN65HVD230
INA233 Voltage/Current
INA226
A1
A0
ALERT
SDA
SCL
IN+
IN-
VBUS
GND
VS
SHUNT+
SHUNT-
V_OUT
3.3V
C8
0.1uF
C9
10uF
Teensy 3.2
U$1
RESET
PGM
VBAT
VIN
3.3V
GND
AGND
23/A9
22/A8
21/A7
20/A6
19/A5
18/A4
17/A3
16/A2
15/A1
14/A0
CAN_TX
CAN_RX
EN_CAN
5V
3.3V
R3
4.7k
R4
4.7k
SCL
SDA
ALERT
Connector to IVT
CONN_IVT
12V
CANL
CANH
CAN for vehicle network
(-)
(+)
CANL
CANH
eBay LCD backpack
JP1
3.3V
5V
CONN_LCD
SDA
SCL
USB power bank input
5V
Bus power (optional!)
V_IN
IN
OUT
GND
IC1
C4
10uF
5v to 12v boost
J1
12V
5V
C5
10uF
C6
10uF
Boost