Московский авиационный институт
(национальный исследовательский институт)

Факультет «Прикладная математика и физика»
Кафедра вычислительной математики и программирования

ОТЧЕТ

по лабораторным работам по курсу «Базы данных»

Тема: «Расписание Авиарейсов»

5 семестр

Студенты Бабин,
Кондратьев
Группа М8О-306Б-19
Руководитель
Дата
Оценка

Москва, 2021

ERwin

Логическая

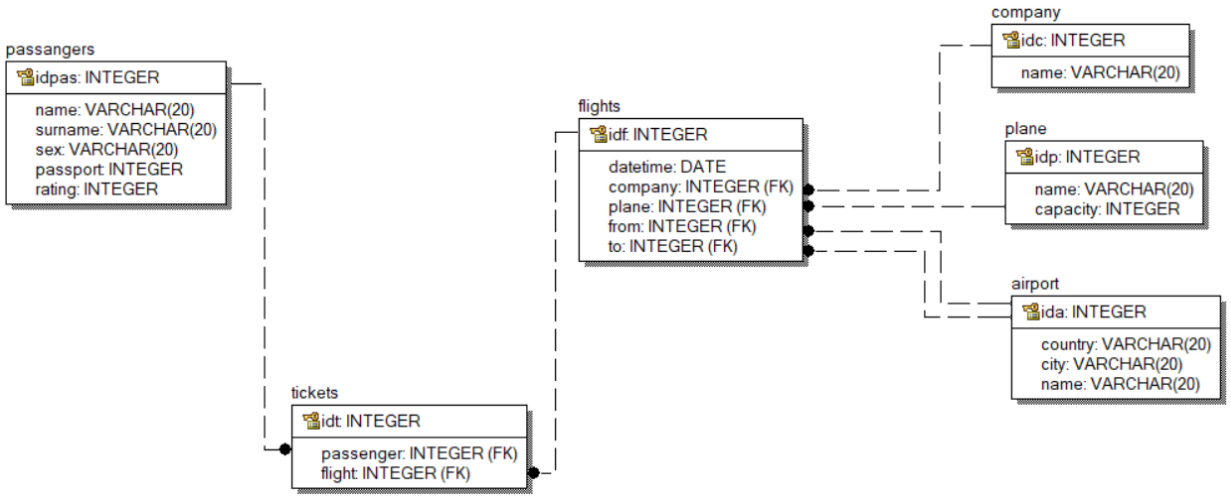

Физическая

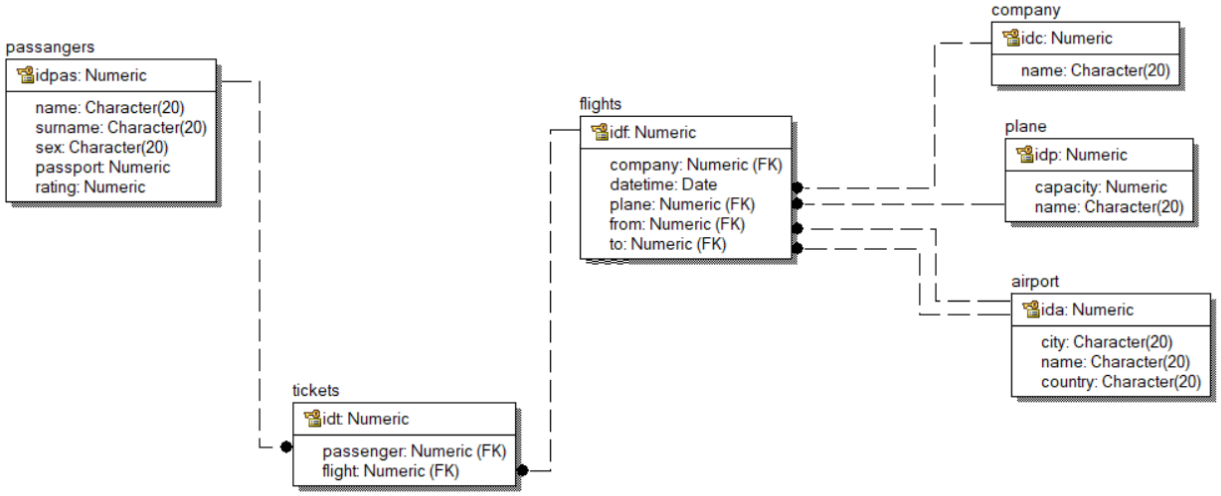

Foxpro

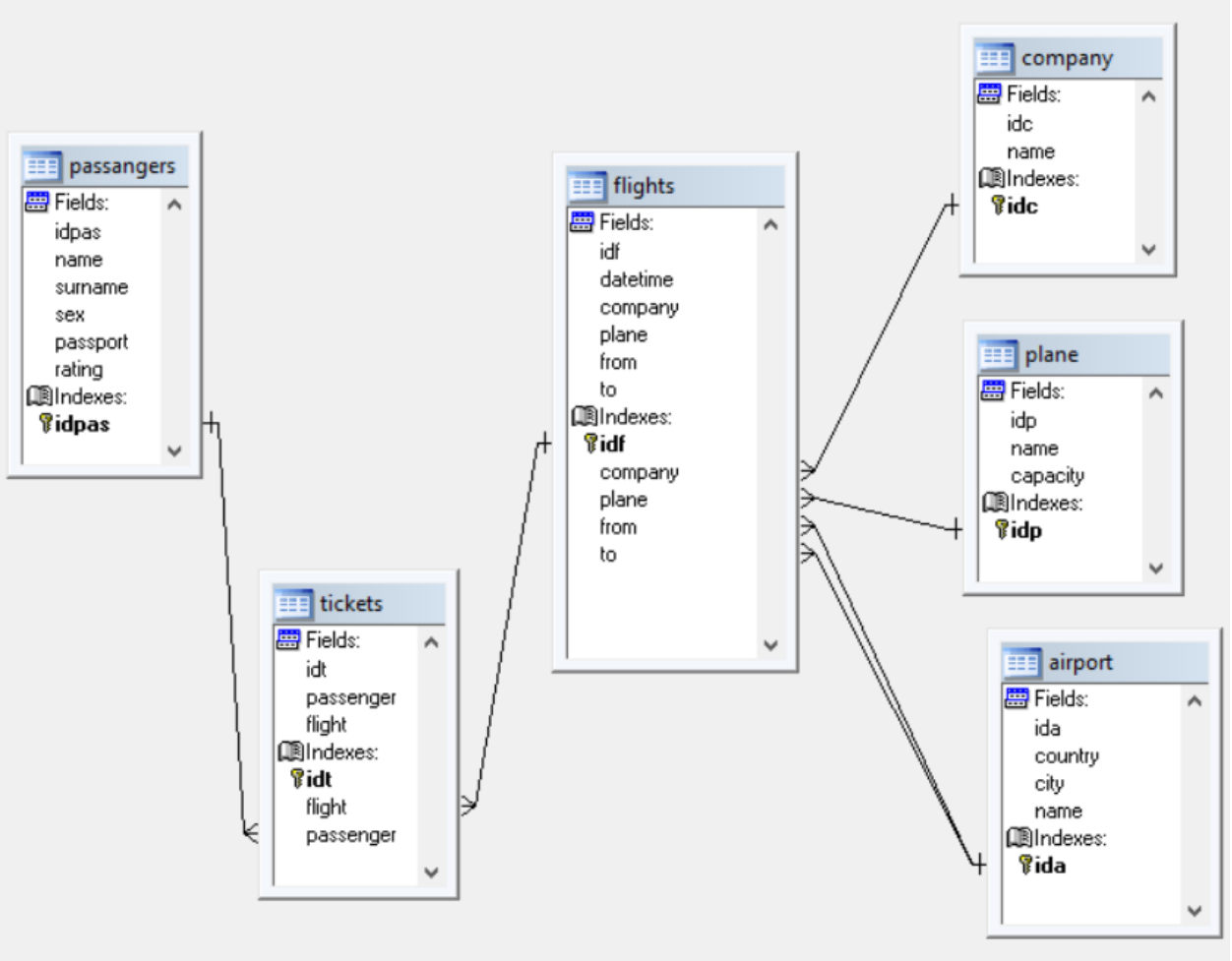
passangers
Fields:
idpas
name
surname
sex
passport
rating
Indexes:
idpas
tickets
Fields:
idt
passenger
flight
Indexes:
idt
flight
passenger
flights
Fields:
idf
datetime
company
plane
from
to
Indexes:
idf
company
plane
from
to
company
Fields:
idc
name
Indexes:
idc
plane
Fields:
idp
name
capacity
Indexes:
idp
airport
Fields:
ida
country
city
name
Indexes:
ida

Таблицы

Таблица Company (компании)

Company - Microsoft Visual FoxPro

File Edit View Tools Program Table Window Help

db

Idc	Name
1	Aeroflot
2	S7 Airlines
3	Qatar Airways
4	Brussels Airlines
5	ANA All Nippon Airways
6	Cathay Pacific Airways
7	Emirates
8	EVA Air
9	Qantas Airways
10	Lufthansa

Таблица Plane (самолеты)

Plane - Microsoft Visual FoxPro

File Edit View Tools Program Table Window H

Idp	Name	Capacity
1	Airbus	850
2	Commuter liners	500
3	Jets	100
4	Jumbo Jets	120
5	Light Jets	80
6	Mid-Size Jets	110
7	Piston Aircraft	200
8	Regional Aircraft	250
9	Short-Haul Aircraft	300
10	Wide Body Airliners	150

Таблица Airport (аэропорты)

Airport - Microsoft Visual FoxPro

File Edit View Tools Program Table Window Help

db

Ida	Country	City	Name
1	Turkey	Istanbul	Istanbul Airport
2	France	Paris	Charles de Gaulle Airport
3	Netherlands	Amsterdam	Amsterdam Airport Schiphol
4	Russia	Moscow	Sheremetyevo International Airport
5	Germany	Frankfurt	Frankfurt am Main Airport
6	Spain	Madrid	Adolfo Suarez Madrid-Barajas Airport
7	Russia	Moscow	Vnukovo International Airport
8	France	Paris	Orly Airport
9	United Kingdom	London	Gatwick Airport
10	Switzerland	Zurich	Zurich Airport
11	Greece	Athens	Athens International Airport
12	Austria	Vienna	Vienna International Airport
13	United Kingdom	London	London Stansted Airport
14	Denmark	Copenhagen	Copenhagen Airport
15	Ireland	Dublin	Dublin Airport
16	Italy	Milan	Malpensa Airport
17	United Kingdom	Manchester	Manchester Airport
18	Belgium	Brussels	Brussels Airport
19	Germany	Dusseldorf	Dusseldorf Airport
20	Sweden	Stockholm	Stockholm Arlanda Airport

Таблица Flights (расписание рейсов)

Flights - Microsoft Visual FoxPro

File Edit View Tools Program Table Window Help

db

Idf	Datetime	Company	Plane	From	To
1	09/18/21 06:35:00 PM	6	5	6	7
2	09/19/21 04:40:00 PM	9	9	13	2
3	09/24/21 06:20:00 PM	4	7	19	6
4	09/28/21 09:15:00 PM	6	6	15	12
5	10/18/21 11:20:00 PM	2	10	10	16
6	10/31/21 11:55:00 AM	10	7	3	10
7	11/01/21 02:45:00 PM	9	10	4	8
8	11/04/21 03:25:00 PM	1	2	14	15
9	11/11/21 11:45:00 PM	3	6	15	3
10	11/16/21 08:45:00 PM	9	5	13	11

Таблица Passengers (пассажиры)

Passangers - Microsoft Visual FoxPro

File Edit View Tools Program Table Window Help

db

Idpas	Name	Surname	Sex	Passport	Rating
1	Josephine	Roberts	F	40563370	76
2	April	Greer	F	40784968	80
3	James	Spencer	M	40846110	86
4	Karen	Burns	F	41230234	94
5	Mildred	Shaw	F	42015899	94
6	Lisa	Dixon	F	42032625	86
7	Rodney	Murray	M	42450624	84
8	Carol	Elliott	M	42502318	59
9	Kelly	Chavez	F	43166065	74
10	Doris	Sherman	F	45785461	84
11	Jeanette	Turner	F	45855235	73
12	Tara	Stevens	F	46678047	72
13	Adam	Fields	M	46928364	63
14	Chris	Ortiz	M	47123176	48
15	Rose	Spencer	F	47275916	93
16	Linda	Kennedy	F	47835609	85
17	Larry	Perkins	M	47852260	63
18	Rebecca	Thompson	F	48304025	95
19	Ricardo	Sparks	M	48430083	71
20	Thomas	Miller	M	49115690	71

Таблица Tickets (билеты)

Tickets - Microsoft Visual FoxPro

File Edit View Tools Program Table Window Help

db

Idt	Passenger	Flight
1	19	1
2	1	1
3	6	1
4	2	1
5	6	2
6	6	2
7	20	2
8	9	3
9	15	3
10	12	3
11	11	3
12	10	3
13	16	3
14	10	4
15	5	4
16	11	4
17	3	4
18	6	4
19	11	4
20	5	4
21	1	5
22	4	5
23	12	5
24	8	5
25	16	5
26	18	6
27	11	6
28	17	6
29	4	6
30	14	6
31	4	6
32	13	6
33	20	7
34	14	7
35	4	7
36	7	7
37	2	7
38	6	7
39	16	8

Запросы

1. Пары пассажиров одного полета

```
SELECT F1.flight AS flight_number, P1.idpas AS passanger_number_1,;
 P1.name AS name_1, P1.surname AS surname_1,;
 P2.idpas AS passanger_number_2, P2.name AS name_2,;
 P2.surname AS surname_2;
FROM ;
   Tickets F1,;
  Passangers P1,;
  Passangers P2,;
  Tickets F2;
```

```
WHERE ( (  F1.passenger = P1.idpas;
  AND  F2.passenger = P2.idpas );
  AND  F1.flight = F2.flight );
  AND  P1.idpas > P2.idpas;
ORDER BY F1.flight, P1.idpas, P2.idpas
```

Query

Flight_number	Passanger_number_1	Name_1	Surname_1	Passanger_number_2	Name_2	Surname_2
1	2	April	Greer	1	Josephine	Roberts
1	5	Mildred	Shaw	1	Josephine	Roberts
1	5	Mildred	Shaw	2	April	Greer
1	6	Lisa	Dixon	1	Josephine	Roberts
1	6	Lisa	Dixon	2	April	Greer
1	6	Lisa	Dixon	5	Mildred	Shaw
1	19	Ricardo	Sparks	1	Josephine	Roberts
1	19	Ricardo	Sparks	2	April	Greer
1	19	Ricardo	Sparks	5	Mildred	Shaw
1	19	Ricardo	Sparks	6	Lisa	Dixon
2	7	Rodney	Murray	4	Karen	Burns
2	20	Thomas	Miller	4	Karen	Burns
2	20	Thomas	Miller	7	Rodney	Murray
3	10	Doris	Sherman	9	Kelly	Chavez
3	11	Jeanette	Turner	9	Kelly	Chavez
3	11	Jeanette	Turner	10	Doris	Sherman
3	12	Tara	Stevens	9	Kelly	Chavez
3	12	Tara	Stevens	10	Doris	Sherman
3	12	Tara	Stevens	11	Jeanette	Turner
3	15	Rose	Spencer	9	Kelly	Chavez
3	15	Rose	Spencer	10	Doris	Sherman
3	15	Rose	Spencer	11	Jeanette	Turner
3	15	Rose	Spencer	12	Tara	Stevens
3	16	Linda	Kennedy	9	Kelly	Chavez

2. Пассажиры, которые не пользовались услугами заданной компании

```
SELECT Tt.passenger FROM Tickets Tt;
WHERE Tt.flight IN (SELECT f1.idf FROM Flights as f1 WHERE company = 1);
INTO CURSOR t1

SELECT p.idpas, p.name, p.surname;
FROM Passangers p;
WHERE p.idpas NOT IN (SELECT t1.passenger FROM t1)
```

Query

Idpas	Name	Surname
1	Josephine	Roberts
3	James	Spencer
4	Karen	Burns
5	Mildred	Shaw
6	Lisa	Dixon
7	Rodney	Murray
9	Kelly	Chavez
11	Jeanette	Turner
14	Chris	Ortiz
15	Rose	Spencer
17	Larry	Perkins
18	Rebecca	Thompson
19	Ricardo	Sparks
20	Thomas	Miller

3. Придумать и реализовать запрос на ANY

Пассажиры-мужчины, у которых рейтинг выше, чем у женщин:

SELECT p.name, p.surname, p.rating;

FROM Passangers p;

WHERE p.sex = 'M' AND p.rating > ANY (SELECT p.rating FROM Passangers p WHERE p.sex = 'F');

Query - Microsoft Visual FoxPro

File Edit View Tools Program Table Window

Name	Surname	Rating
James	Spencer	86
Rodney	Murray	84

4. **Определить компанию, которая совершает максимальное количество рейсов**

```
SELECT Flights.company, COUNT(Flights.idf) AS idf_count;

FROM Flights;

GROUP BY Flights.company;

INTO CURSOR t


SELECT name, t.idf_count as count;

FROM Company, t;

WHERE idc = t.company;

AND t.idf_count = (SELECT MAX(t.idf_count) FROM t)
```

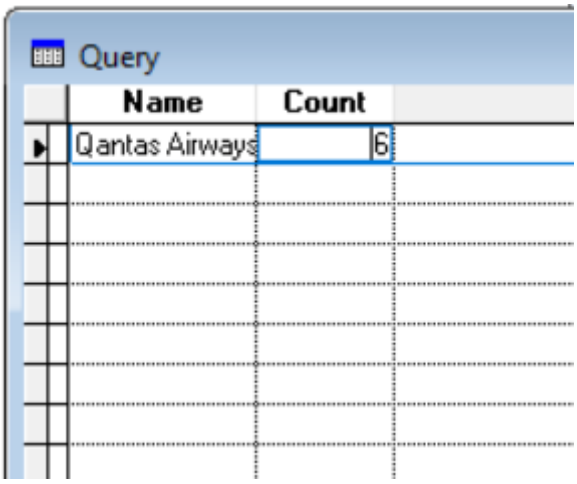

Query

Name	Count
Qantas Airways	6

5. **Наиболее популярные компании, которые обслуживают пассажиров выше среднего**

```
SELECT f.company, COUNT(t.idt) as pas_count;

FROM  Flights f, Tickets t;

WHERE f.idf = t.flight;

GROUP BY f.company;

INTO CURSOR popularity;


SELECT f.company;

FROM Tickets t, Flights f, Passangers p;
```

WHERE p.idpas = t.passenger AND f.idf = t.flight AND p.rating > (SELECT AVG(p.rating) FROM Passangers p);

INTO CURSOR premium;

SELECT qq.company as number, c.name, qq.pas_count as count;

FROM popularity qq, Company c;

WHERE qq.company IN (SELECT q.company FROM premium q) AND qq.company = c.idc;

ORDER BY qq.pas_count DESC;

Query

Number	Name	Count
9	Qantas Airways	14
6	Cathay Pacific	7
10	Lufthansa	7
1	Aero	6
4	Brussels Airline	6
2	S7 Airlines	5

6. Компания с самым большим количеством самолетов

SELECT c.idc, c.name, COUNT(p.idp) AS plane_count;

FROM Company c, Flights f, Plane p;

WHERE c.idc = f.company AND f.plane = p.idp;

GROUP BY c.idc, c.name;

INTO CURSOR t;

SELECT t.idc, t.name, t.plane_count;

FROM t;

WHERE t.plane_count = (SELECT MAX(plane_count) FROM t);

Query - Microsoft Visual FoxPro

File Edit View Tools Program Table Window Help

db

Idc	Name	Plane_count
9	Qantas Airways	3

7. Количество самолётов, которых нет у компании

```
SELECT c.idc, c.name, COUNT(p.idp) AS plane_count;
FROM Company c, Flights f, Plane p;
WHERE c.idc = f.company AND f.plane = p.idp;
GROUP BY c.idc, c.name;
INTO CURSOR t;

SELECT t.idc, t.name, 10-t.plane_count;
FROM t;
```

Query - Microsoft Visual FoxPro

File Edit View Tools Program Table Window Help

db

Idc	Name	Exp_3
1	Aeroflot	9
2	S7 Airlines	9
3	Qatar Airways	9
4	Brussels Airlines	9
6	Cathay Pacific Airways	8
9	Qantas Airways	7
10	Lufthansa	9