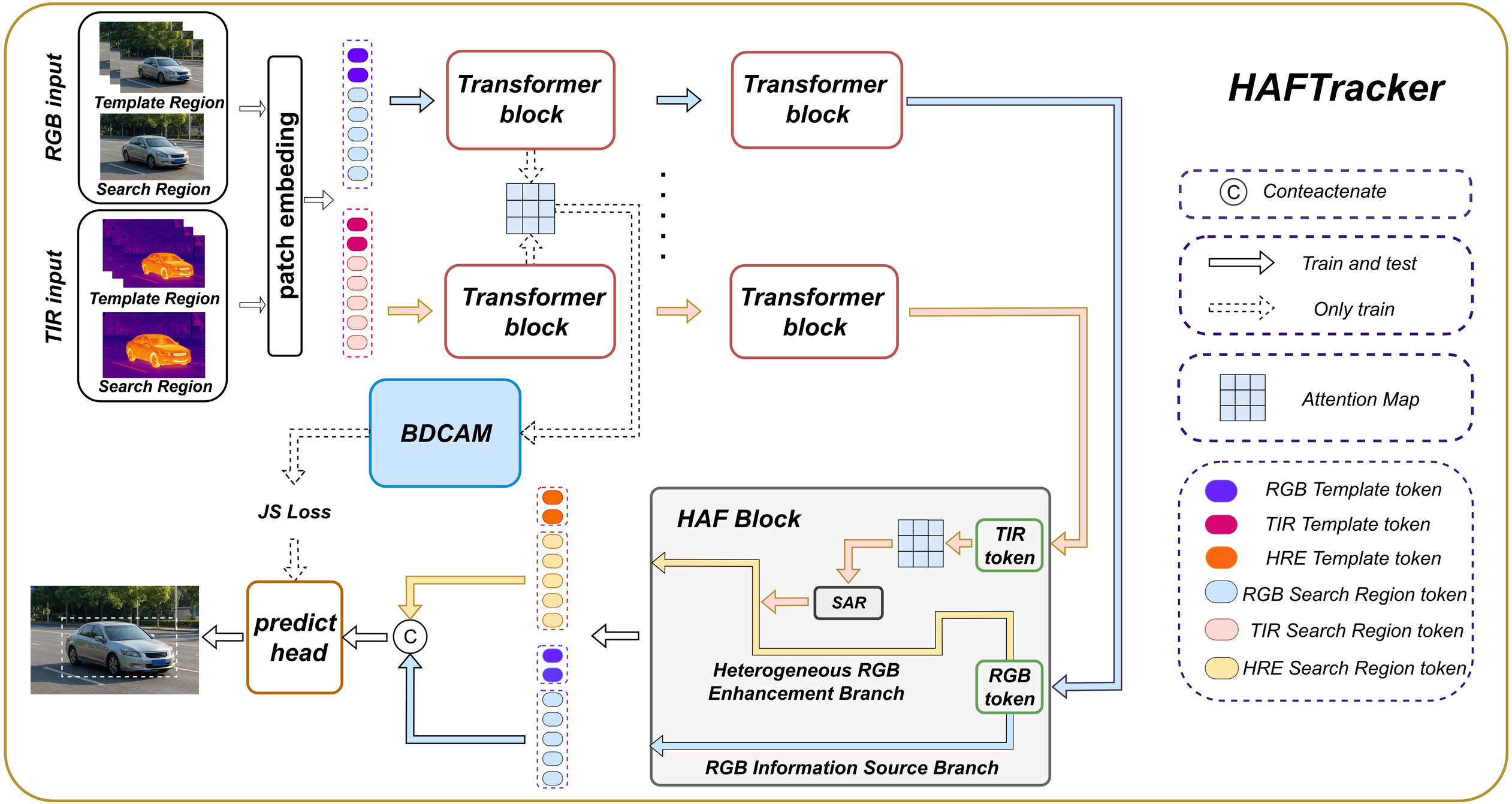
HAFTracker
RGB input
Template Region
Search Region
TIR input
Template Region
Search Region
patch embeding
Transformer block
Transformer block
Transformer block
Transformer block
BDCAM
JS Loss
predict head
C
HAF Block
TIR token
SAR
Heterogeneous RGB Enhancement Branch
RGB token
RGB Information Source Branch
Conteactenate
Train and test
Only train
Attention Map
RGB Template token
TIR Template token
HRE Template token
RGB Search Region token
TIR Search Region token
HRE Search Region token