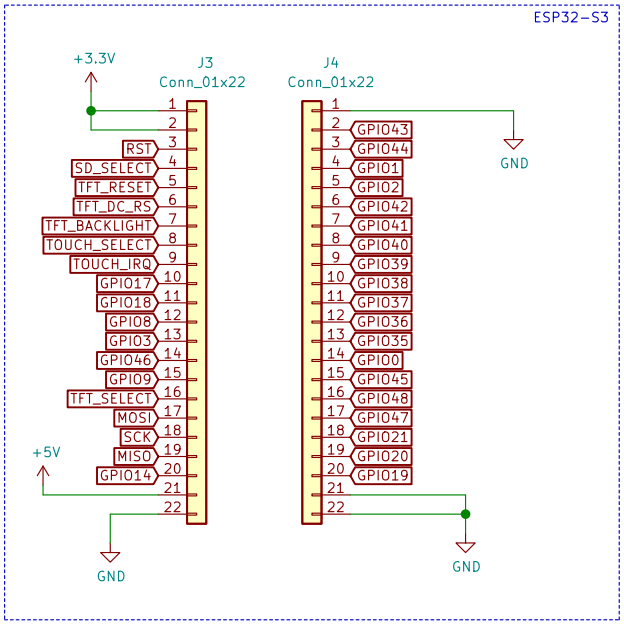

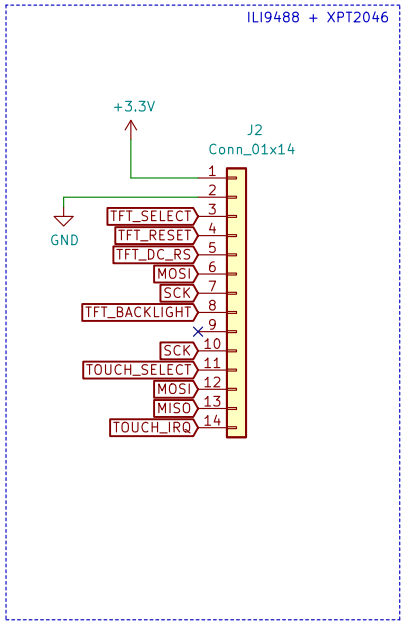

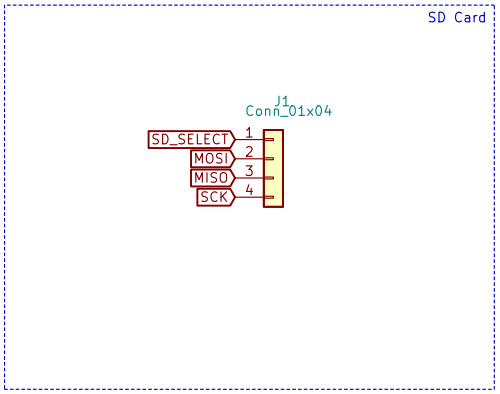

This board is based on the pinout card below...

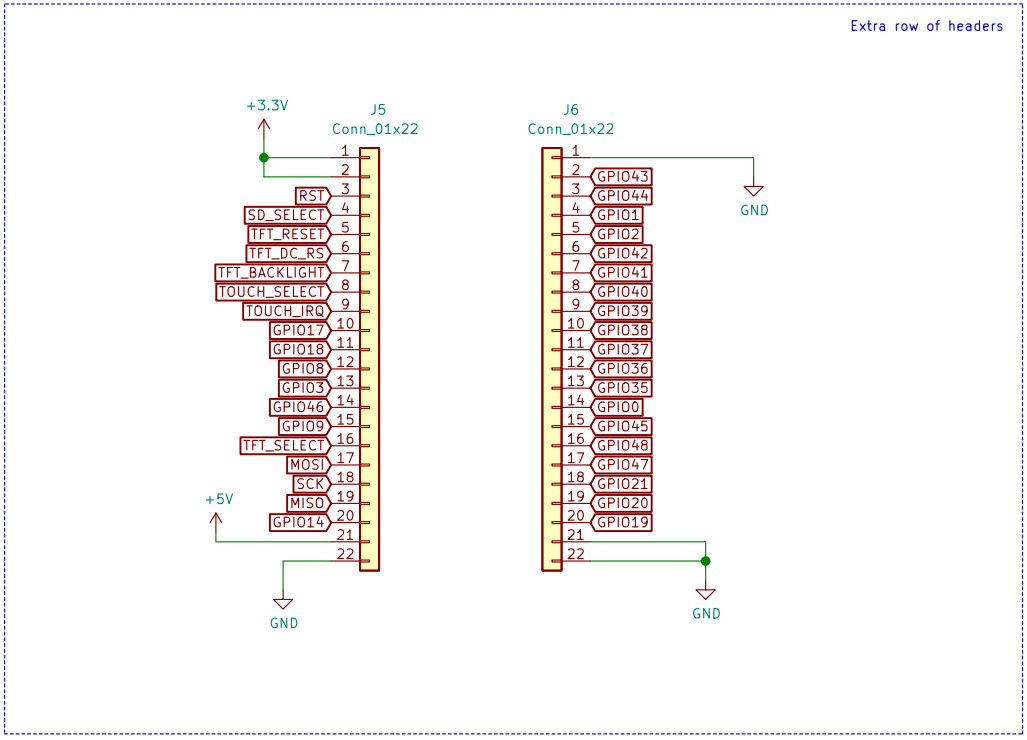

ESP32-S3-DevKitC-1

ESPRESSIF

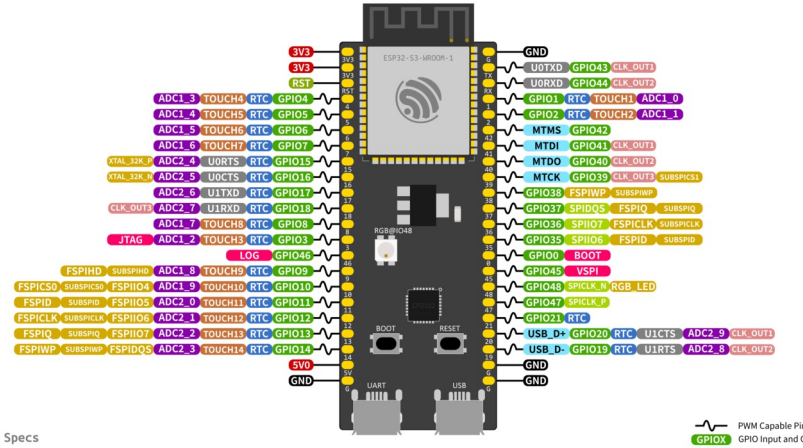

ESP32-S3 Specs
32-bit Xtensa® dual-core @240MHz
Wi-Fi IEEE 802.11 b/g/n 2.4GHz + BLE 5 Mesh
512 KB SRAM (16 KB SRAM in RTC)
384 KB ROM
45 GPIOs, 4x SPI, 3x UART, 2x I2C,
14x Touch, 2x I2S, RMT, LED PWM, USB-OTG,
TWAI®, 2x 12-bit ADC, 1x LCD interface, DVP

- PWM Capable Pin
- GPIOX — GPIO Input and Output
- JTAG/USB — JTAG for Debugging and USB
- ADCX_CH — Analog-to-Digital Converter
- TOUCHX — Touch Sensor Input Channel
- OTHER — Other Related Functions
- SERIAL — Serial for Debug/Programming
- STRAP — Strapping Pin Functions
- RTC — RTC Power Domain (VDD3P3_RTC)
- GND — Ground
- PWD — Power Rails (3V3 and 5V)
- MISC — Miscellaneous/SPI functions
- CLK_OUTx — Clock Output

Dustin Watts

Sheet: /
File: ESP32-S3+TFT_Combiner.sch

Title: ESP32-S3+TFT_combiner

Size: A4	Date: 2022-05-17	Rev: 1
KiCad E.D.A. kicad (5.1.6-0)		Id: 1/1